THE COMPACT HIGH PERFORMANCE SOLUTION
FOR MOBILE AND INSTALLED APPLICATIONS

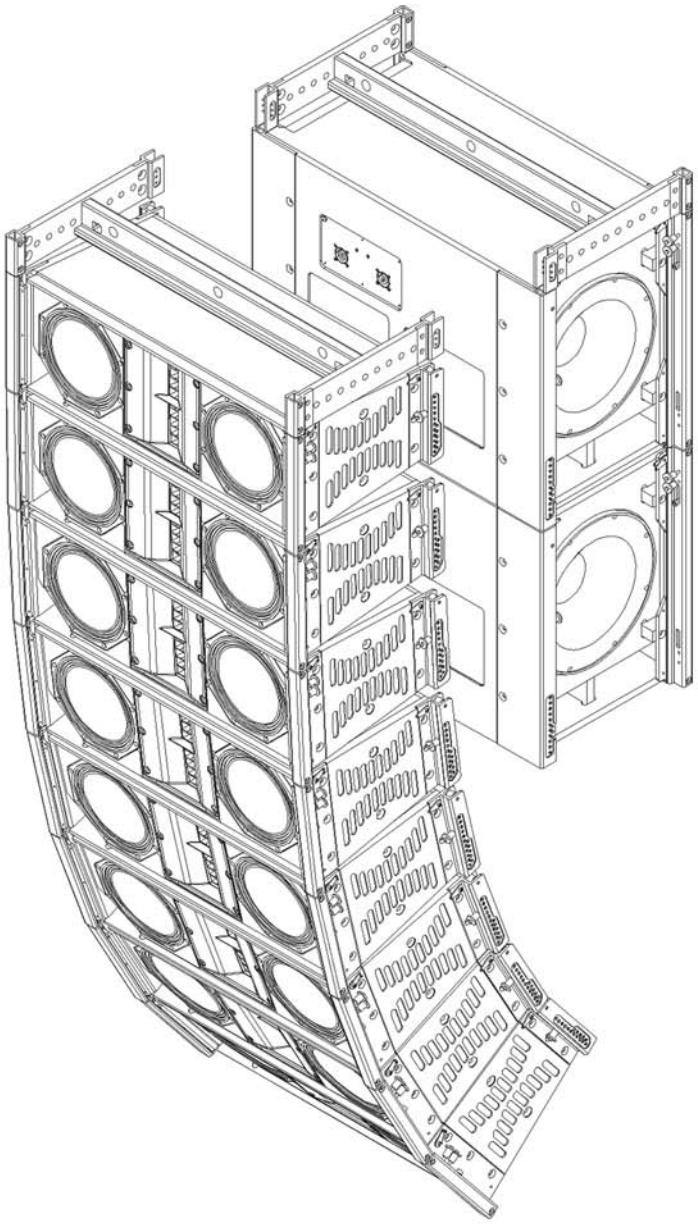

Electro-Voice®

LINE VERY COMPACT

PRELIMINARY

Electro-Voice®, an industry pioneer – still setting standards in professional sound reinforcement

■ Over the last 75 years, EV® has become one of the leading manufacturers on pro audio. More than 50 years experience in design and manufacturing of transducers, systems and power amplifiers combined with the heritage of nearly 30 years in digital signal processing are the foundation for state-of-the-art audio performance. The very close relation of the EV® design team with customers around the world is the basis for optimized system solutions. It's the unique combination of audio quality, reliability and ease of use that is exceptional. Backed-up with one of the largest dealer and service networks in the pro audio world an EV® system represents outstanding value.

Line-Array Systems from Electro-Voice: A true advantage

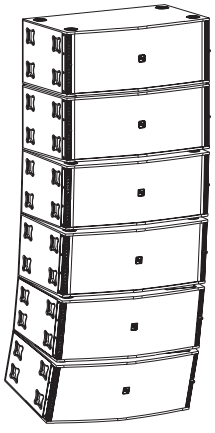

EV X-Line Array comprising four XVLS and two XVLT cabinets

■ Line array's have been known in the industry for several decades, during the last five years they have become the standard for concert and touring applications and also very popular for installed sound systems. Today there's a large number of manufacturers offering "line arrays" – a vertical array of loudspeaker cabinets. But not everything that looks like a line array behaves correctly as one. Electro-Voice®'s X-Line and XLC (X-Line Compact) have been proven in countless events to have "true line-array" behavior: a very well behaved horizontal dispersion and a very even front-to-back coverage. With X-Line Very Compact, EV® engineers have defined a new group of very compact, high performing line arrays.

The "Hydra" – EV®'s plane wave generator

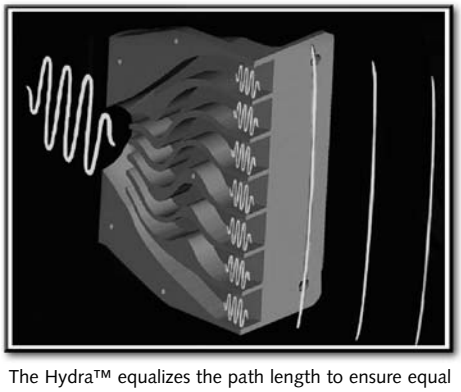

The Hydra™ equalizes the path length to ensure equal arrival times at the exit, which is necessary to create a plane wave.

■ The most critical information in any music signal is in the mid and high frequencies and the number of HF devices is still a "measure" to determine, whether the size of a sound system is adequate. In a vertical array of multiple sound sources it is vital to maintain the distance between the elements to be "small" relative to the radiated wavelength. While this is far less complicated for lower frequencies, the challenge is to couple frequencies above 3kHz (wavelength about 11cm, or 4 inches) in equal amplitude and phase in order to generate a "plane wave". A key component for the outstanding performance and success of EV line arrays is the unique design of the "Hydra". The signal from one HF driver is divided into discrete paths arriving with same amplitude and phase at the waveguide as a plane wave. This solution has much lower distortion than many other designs.

Electro-Voice®

X-Line Very Compact – Full Bandwidth Line Array for demanding applications

■ Whenever highest audio performance but limited size and weight has to be combined, Electro-Voice's X-Line Very Compact is the answer. EV® is the only manufacturer that offers:

- **Two options of size and performance: XLD or XLE**
- **Two ND2HF drivers for maximum output & headroom**

In addition X-Line Very Compact delivers:

- **Unrivalled even front-to-back and side-to-side coverage**
- **Easy to set-up, transport and operate**
- **Complete system including DSP, amplification, and rigging**

PRELIMINARY

X-Line Very Compact – in concert & touring applications

■ While expectations of audio performance in terms of SPL, natural response and uniform coverage have expanded, demand for smaller and lighter sound systems has increased. X-Line Very compact offers the best of both worlds: XLD systems are capable of producing concert SPL levels on full bandwidth in small to medium sized venues. Smaller XLE-systems are ideal for critical audio requirements where overall cluster size is highest priority. Both systems are well suited for many types of live and install applications.

The High Frequency Advantage of X-Line Very Compact – new Hydra™ Elements and new Neodymium Drivers

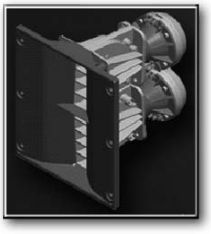

■ EV's Hydra™ used in X-Line and XLC has an overall height of 7-inches (17.5cm). In order to maintain the extraordinary HF response, a new 4-inch (10cm) Hydra was developed to match the DVN2080 8-inch woofer. Each of the two Hydras is driven by the new ND2S, a 2" neodymium compression driver. A single waveguide is fed with the plane wave from the hydras resulting in wide bandwidth, even horizontal coverage, and predictable vertical coverage.

Electro-Voice®

XLD 281

Full bandwidth 3-way line array element

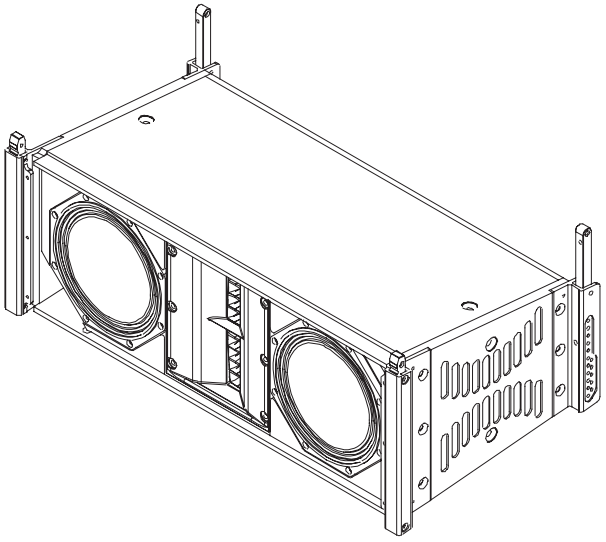

- **Full Bandwidth 3-way Element (60Hz-20kHz)**
- **Very Compact, Lightweight**
- **CCT™ (Coverage Control Technology)**
- **120° Horizontal Coverage to 250 Hz**
- **Simple, Quick Integrated Rigging**
- **Versatile Subwoofer Integration**
- **Bi-Amp or Tri-Amp Operation**
- **Neodymium Transducers**
- **LAPS Aiming and Flying Software**

■ The XLD 281 is the core element for constructing X-Line Very Compact systems. The XLD281 is a 3 –way design using CCT™ (Coverage Control Technology) to control horizontal coverage to 250Hz. It uses a 8" neodymium LF transducer, a 8" neodymium LF/MB transducer, and two neodymium 2" voice coil compression drivers combining through 2 hydra plane wave generators into a 120° x 10° waveguide. CCT uses both 8" transducers to provide maximum low frequency output and operating bandwidth while controlling horizontal beam width to 250 Hz by using DSP. The XLD281 can be used in tri-amp mode, or in bi-amp using a sophisticated internal passive network. Designed for use in arrays of four or more elements the XLD281 delivers full bandwidth audio with precise, predictable coverage control. Integrated rigging with hinge points located correctly between array elements is simple to use and quickly provides uncompromised line array performance. Ground stacking is easily done using array rails or subwoofers as the array base.

Beamwidth

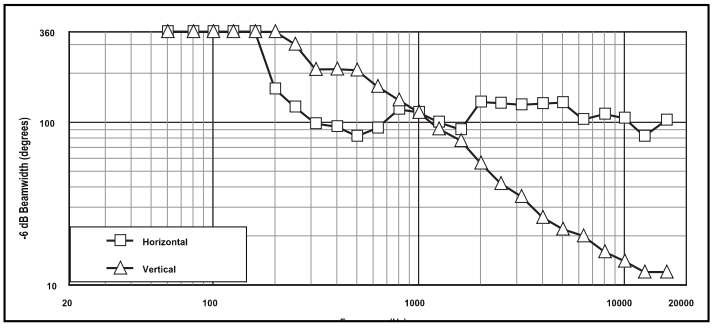

Technical Specifications

Freq. Response[1] (-3 dB):	75 Hz-18 kHz
Freq. Range[1] (-10 dB):	60 Hz-20 kHz
Max Calculated SPL[1] :	135 dB Cont., 141 dB Pk
Horizontal Coverage:	120°
Vertical Coverage:	Array Dependent, Software Definable
Rigging:	Fully Captive Aluminum, 1° increments, 16 elements with 8 to 1 Safety Factor
LF1 Power Handling:	200W Cont., 800W Peak
LF2 Power Handling:	200W Cont., 800W Peak
HF Power Handling:	80W Cont., 320W Peak
Biamp LF1/HF Power Handling:	400W Cont., 1600W Peak LF2 - 200W Cont., 800W Peak
Sensitivity[1] :	112 dB
Bandpass Freq[2]:	50 - 250 Hz
LF1 to HF Crossover Freq[2]:	1600 Hz
LF1 Passband: Recommended Amplifier:	1 x 8" DVN2080, 16 ohms EV CP3000S
LF2 Passband: Recommended Amplifier:	1 x 8" DVN2080, 16 ohms, EV CP3000S
HF Passband: Recommended Amplifier:	2 x ND2S, 16 ohms EV CP3000S
Biamp LF1/HF Passband: Recommended Amplifier:	16 ohms, EV CP3000S
Connectors:	2 x NL8
Enclosure Material:	Birch plywood w/Futura
Grille:	Zinc plated steel with powdercoat
Environmental Spec:	IEC 529 IP24, MIL 810
Dim (HxWxD):	9.90" x 28.58" x 14.52" (251 x 726 x 369 mm)
Net Weight:	48 lbs (21.8 kg)
Shipping Weight:	51 lbs (23.1 kg)

[1] Full Space Measurement of 4 Elements.
[2] Use EV or KT Signal Processing or Download Presets from Electro-Voice Website.

PRELIMINARY

Electro-Voice®

XLE181

Full bandwidth 2-way line array element

- **Full Bandwidth 2-Way Element (75Hz-20kHz)**
- **Most Compact, Very Lightweight**
- **Simple, Quick Integrated Rigging**
- **Bi-Amp or Fullrange Operation**
- **Neodymium Transducers**
- **LAPS Aiming and Flying Software**

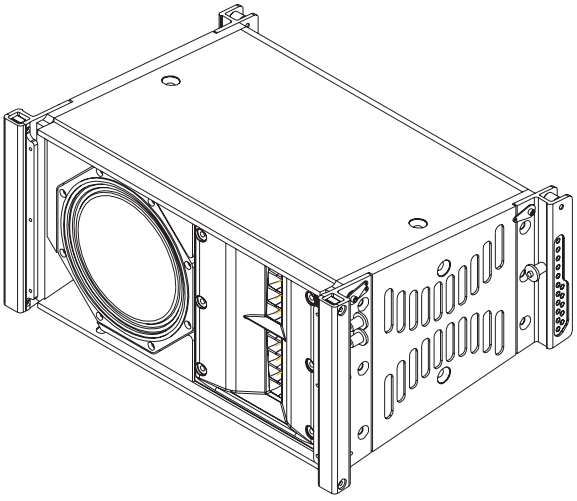

■ The XLE181 is the core element for constructing most compact line array systems. It is a 2-way design using the same 8″ neodymium LF/MB transducer as the XLD281 and the same dual ND2S HF driver combination with a 120° x 10° waveguide coverage. With less than 18 kg (40lbs) per unit the XLE offers a powerful, very compact solution for sound reinforcement applications with limited space and/or load capacity.

The XLE181 can be used in bi-amp mode or fullrange using a sophisticated internal passive network. Designed for the use in arrays of four and more elements, the XLE181 delivers full bandwidth audio with precise, predictable coverage control. The integrated rigging is simple to use and quickly provides uncompromised line array performance.

XLE181 with hanging grid

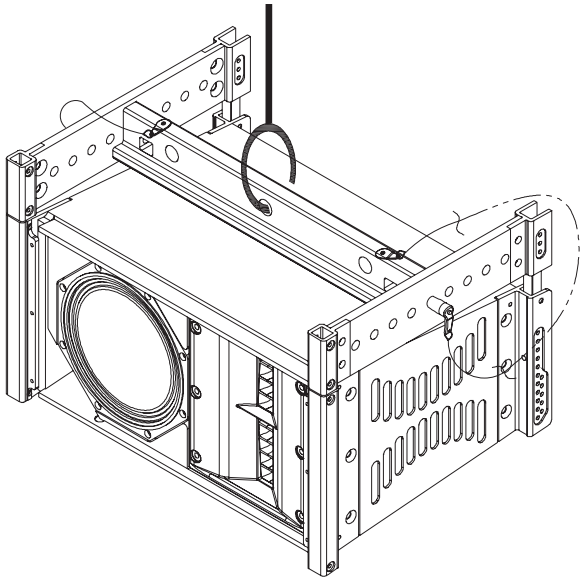

Technical Specifications

Freq. Response[1] (-3 dB):	90 Hz-18 kHz
Freq. Range[1] (-10 dB):	75 Hz-20 kHz
Max Calculated SPL[1]:	132 dB Cont., 138 dB Pk
Horizontal Coverage:	120°
Vertical Coverage:	Array Dependant
Rigging:	Fully Captive Aluminum, 1° increments, 16 elements with 8 to 1 Safety Factor
LF Power Handling:	200W Cont., 800W Peak
HF Power Handling:	80W Cont., 320W Peak
Sensitivity[1]:	112 dB
LF to HF Crossover Freq[2]:	1600 Hz
LF Passband: Recommended Amplifier:	1 x 8" DVN2080, 16 ohms EV CP3000S
HF Passband: Recommended Amplifier:	2 x ND2S, 16 ohms EV CP3000S
Connectors:	2 x NL8
Enclosure Material:	Birch plywood w/Futura
Grille:	Zinc plated steel with powdercoat
Environmental Spec:	IEC 529 IP24, MIL 810
Dim (HxWxD):	9.90" x 20.30" x 14.52" (251 x 516 x 369 mm)
Net Weight:	38 lbs (17.2 kg)
Shipping Weight:	41 lbs (18.4 kg)

[1] Full Space Measurement of 4 Elements.
[2] Use EV or KT Signal Processing or Download Presets from Electro-Voice Website.

PRELIMINARY

Electro-Voice®

XS 212

double 12" side-firing bass cabinet

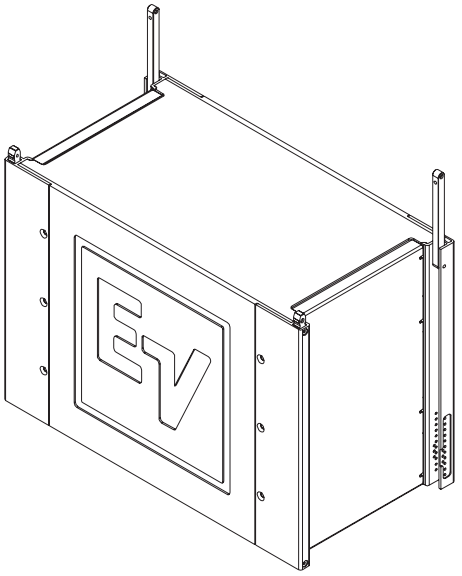

■ The XS212 is a double 12-inch bass cabinet featuring two of the new DVX3120 woofers. A unique configuration allows side firing transducers to match the XLD281 horizontal coverage and match the rigging footprint. That allows to either use the XS212 above or below arrays of XLD281 or, if vertical space is limited to be flown behind the full range array.
Depending on music style and taste the ratio of XLD to XS212 is 3 or 4 to 1. Ground stacked one XS212 has the same heights as two XLD281 which is convenient for transportation.

DVX3120 New Generation Woofer

■ EV® is one of the very few loudspeaker manufacturers that has a long experience, heritage and capability for designing and building their own transducers. The DVX3120 is the latest model from the brand new DVX-Series. Forced-Air-Voice-Coil-Cooling provides very low power compression for very high SPL capability, low distortion and reliability.

XLD Bottom Dolly for convenient Transportation

■ The XLD bottom is suitable for two stacks of either XLD281 or XS212. A top cover and allows for additional stacking of other material on the top. The footprint of the Dolly is 80cm (32 inch) by 85 cm (33.4 inch) to match truck space by using three wide.

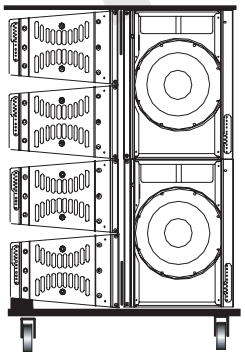

- **2 x 12" DVX3120 Woofer**
- **Same Footprint & Compatible Rigging to XLD281**

PRELIMINARY

Technical Specifications

Freq. Response[1] (-3 dB):	52 Hz
Freq. Range[1] (-10 dB):	42 Hz
Max Calculated SPL[1] :	130 dB Cont., 136 dB Pk
Vertical Coverage:	Array Dependant, Software Definable
Rigging:	Fully Captive Aluminum, 1° increments, 16 elements with 8 to 1 Safety Factor
Power Handling:	1000W Cont., 4000W Peak
Sensitivity[1] :	100 dB
Highpass Freq[1]:	40 Hz
Recommended Crossover Freq[1]:	100 Hz
LF Passband: Recommended Amplifier:	2 x 12" DVX3120, 4 ohms EV CP3000S
Connectors:	2 x NL8
Enclosure Material:	Birch plywood w/Futura
Grille:	Zinc plated steel with powdercoat paint
Environmental Spec:	IEC 529 IP24, MIL 810
Dim (HxWxD):	20.00" x 28.58" x 14.90" (508 x 726 x 378 mm)
Net Weight:	85 lbs (38.5 kg)
Shipping Weight:	90 lbs (40.8 kg)

[1] Half Space Measurement.

Electro-Voice®

System Applications: 16 XLD-Triamped (5 Segments) – Medium to Larger Venues

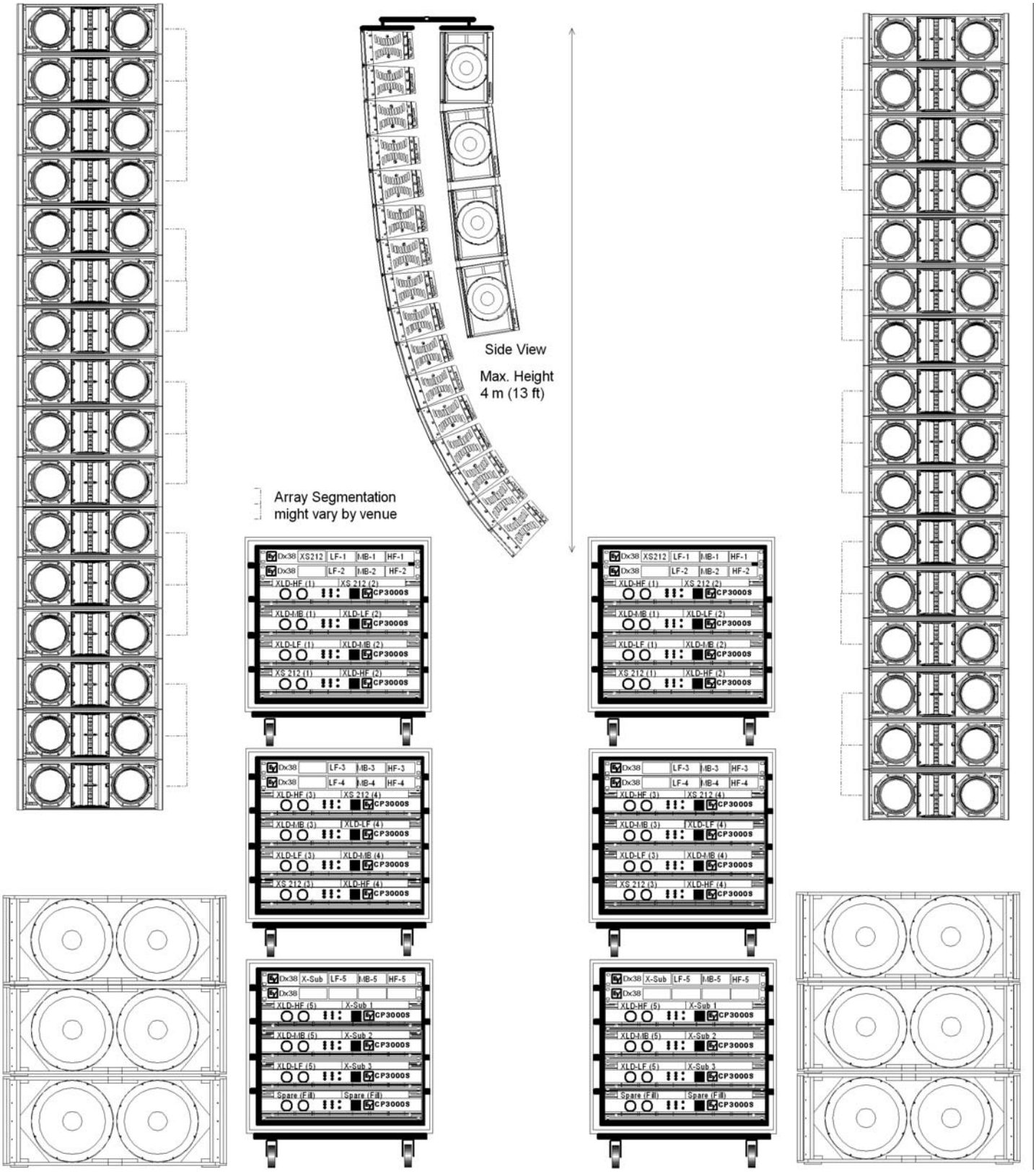

Cabinets:	32 XLD281, 8 XS212, 6 X-Sub	**Horizontal Coverage**	120 degrees
Amplifiers:	24 CP3000S (2 Spare)	**Typical: Distance**	120dB SPL @ 60 m (200ft)
Controllers:	10 Dx38	**Total Amp: Power**	2 x 23.6kW = 57.2kW
Cabling:	16 NL8-long, 30 NL8-short	**Accessories:**	4 XLD Grids, 2 C-Beams, 6 XLD-Dolly, 2 XL-Dolly

5 control segments for optimized array control (can be operated optional with 4). Optional drive: 24 P3000RL

System Applications: 12 XLD Triamped (4 Segments) - Medium to Larger Venues

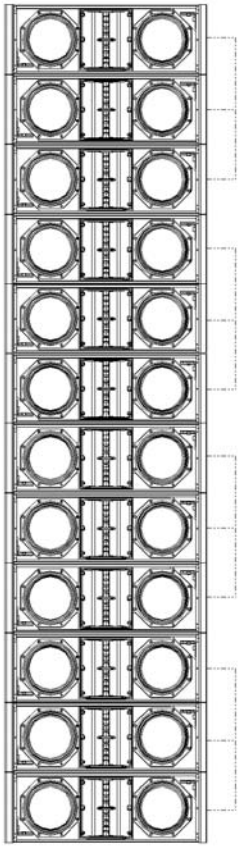

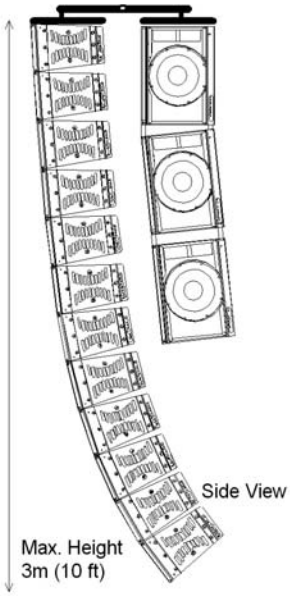

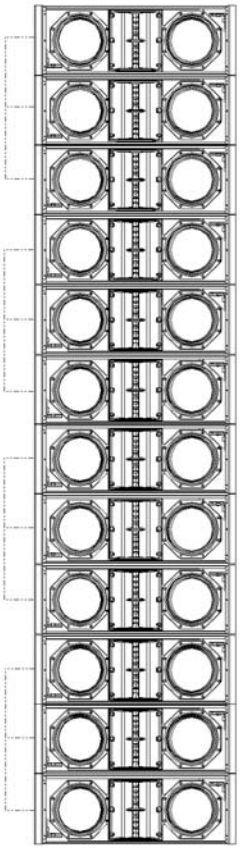

Array segmentation might vary by venue

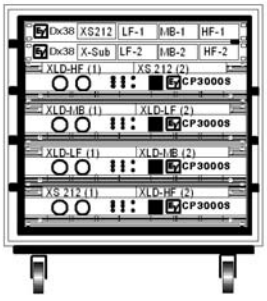

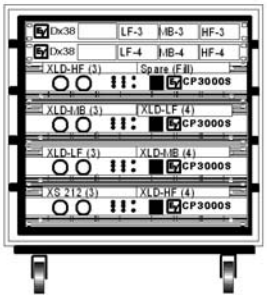

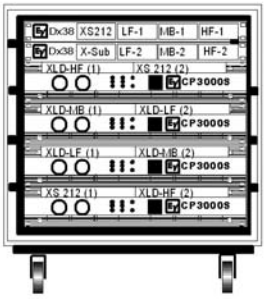

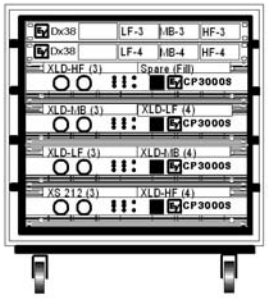

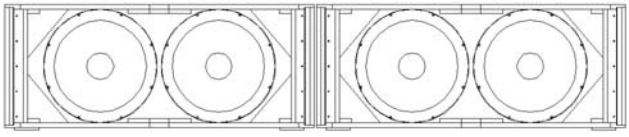

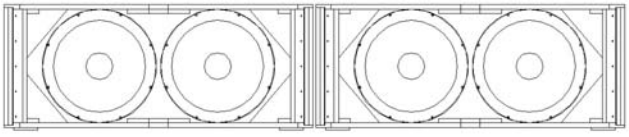

Cabinets:	24 XLD281, 6 XS212, 4 X-Sub	**Horizontal Coverage**	120 degrees
Amplifiers:	18 CP3000S	**Typical: Distance**	120dB SPL @ 50 m (160 ft)
Controllers:	8 Dx38	**Total Amp: Power**	2 x 17.5kW = 35kW
Cabling:	12 NL8-long, 22 NL8-short	**Accessories:**	4 XLD Grids, 2 C-Beams, 5 XLD-Dolly, 1 XL-Dolly

4 control segments for optimized array control. Optional drive: 12 CP2200 & 6 CP3000S, or 18 P3000 RL

System Applications: 8 XLD-Biamp (3 Segments) – Very-Compact for Medium Venues

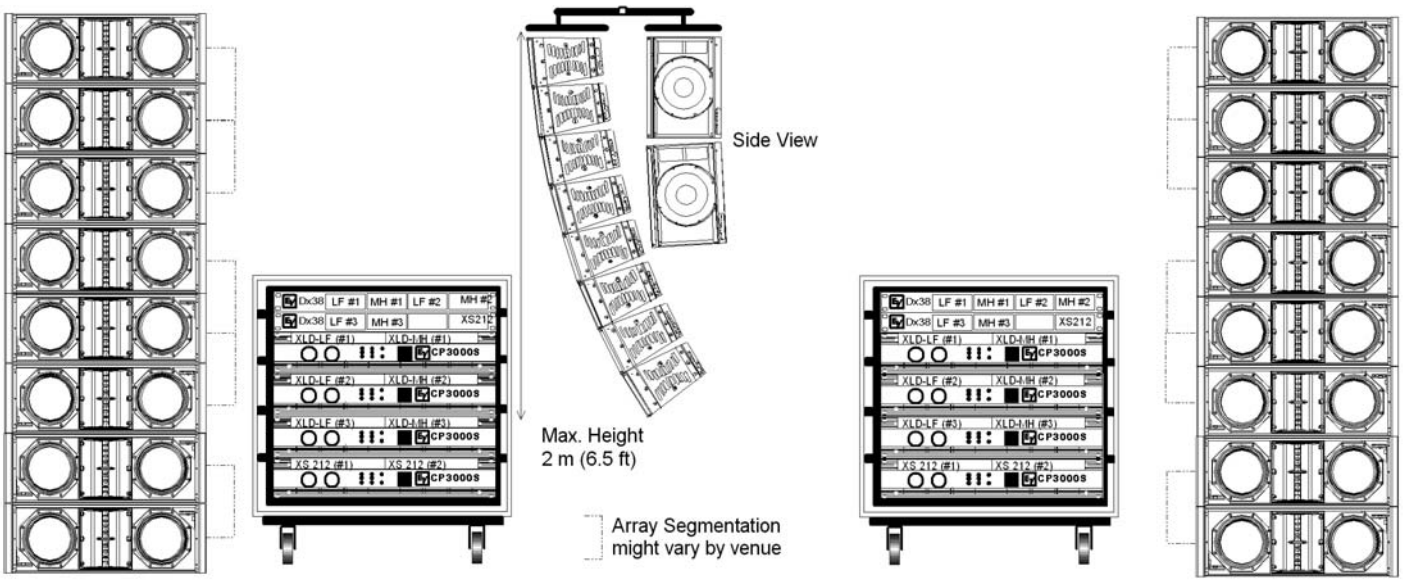

Cabinets:	16 x XLD 281, 4 x XS212	**Horizontal Coverage**	120 degrees
Amplifiers:	8 x CP 3000S	**Typical: Distance**	120dB SPL @ 50 m (160 ft)
Controllers:	4 x DX38	**Total Amp: Power**	2 x 7.600 W = 15.200 W
Cabling:	6 x NL8 long, 14 x NL8 short	**Accessories:**	4 x XLD Grid, 2 x Coupler Beam, 3 XLD Dolly

Three control segments for optimized array control. Optional drive with 6 P3000RL & 2 P3000RL, or 6 CP2200 & 2 CP3000RL. Add subbass extension add 2 X-Subs.

System Applications: 6 XLD-Biamp (3 Segments) – Very-Compact for Small to Medium Venues

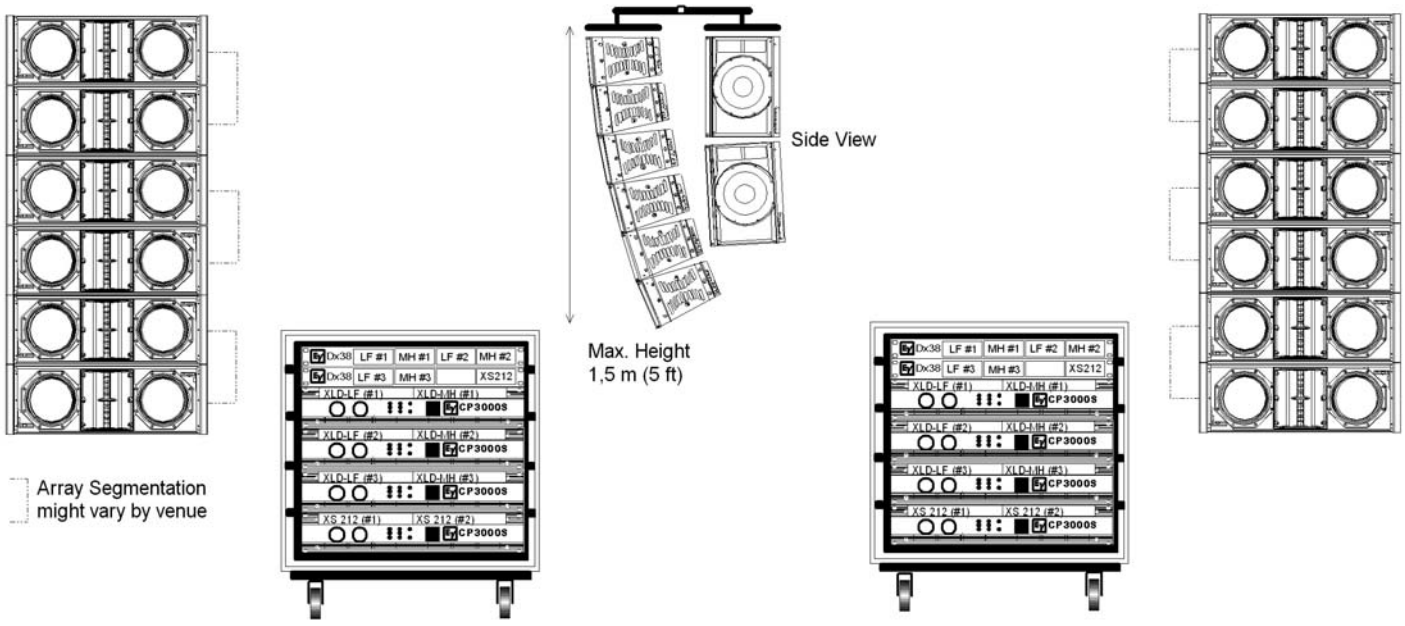

Cabinets:	12 x XLD 281, 4 x XS212	**Horizontal Coverage**	2 x 120 deg
Amplifiers:	8 x CP 3000S	**Typical: Distance**	117dB SPL @ 40 m (130ft)
Controllers:	4 x DX38	**Total Amp: Power**	2 x 6.400 W = 12.800 W
Cabling:	6 x NL8 long, 10 x NL8 short	**Accessories:**	4 x XLD Grid, 2 x Coupler Beam, 3 XLD Dolly

Three control segments for optimized array control. Optional drive with 6 P3000RL & 2 P3000RL, or 6 CP2200 & 2 CP3000RL. Add subbass extension add 2 X-Subs.

System Applications: 8 XLD-Biamp (3 Segments) – Very-Compact for Medium Venues

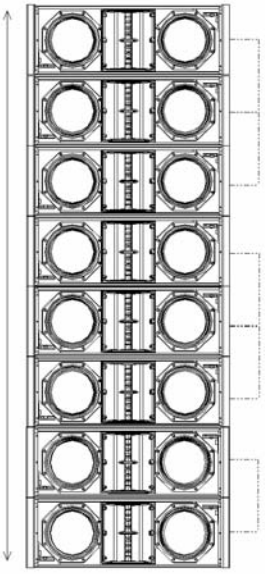

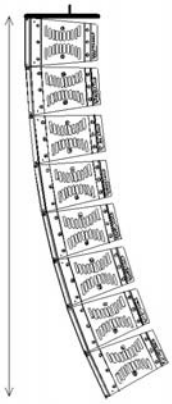

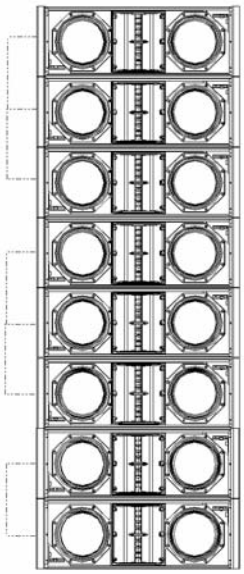

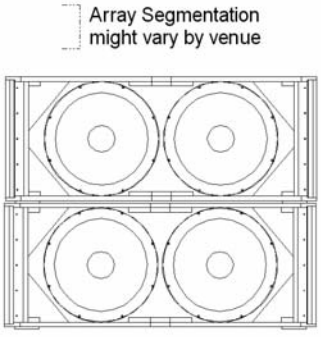

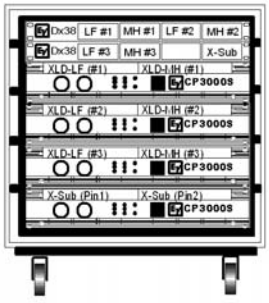

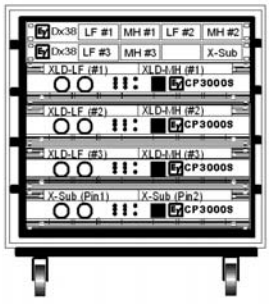

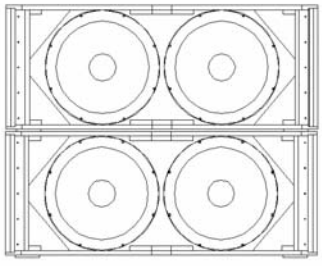

Cabinets:	16 x XLD 281, 4 x XS212	**Horizontal Coverage**	2 x 120 deg
Amplifiers:	8 x CP 3000S	**Typical: Distance**	120dB SPL @ 40 m (130ft)
Controllers:	4 x DX38	**Total Amp: Power**	2 x 7.600 W = 15.200 W
Cabling:	6 x NL8 long, 14 x NL8 short	**Accessories:**	4 x XLD Grid, 2 x Coupler-Beam, 3 x XLD Dolly

3 contol segments for optimized array control. Optional drive: 6 x P1200RL & 2 x P3000RL, or 6 x CP2200 & 2 x CP3000RL.
For bass extension add 2 XA212 per side.

System Applications: 6 XLD-Biamp (3 Segments) – Very-Compact for Small to Medium Venues

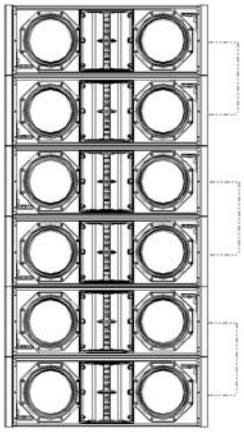

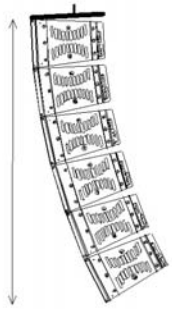

Max. Height
1.5 m (5 ft)

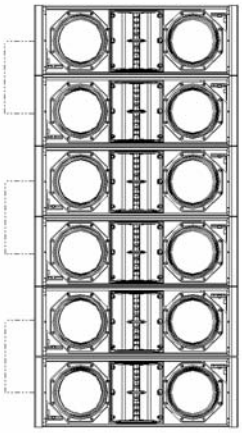

Array Segmentation might vary by venue

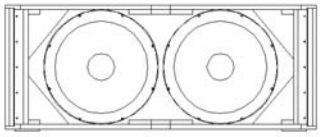

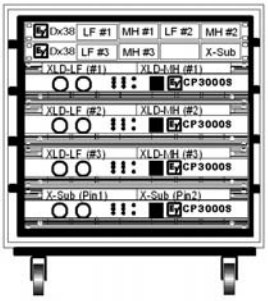

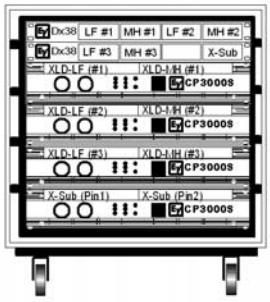

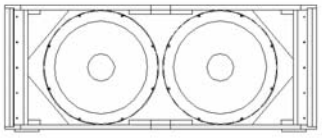

Cabinets:	12 x XLD 281, 2 x X-Sub	**Horizontal Coverage**	2 x 120 deg
Amplifiers:	8 x CP 3000S	**Typical: Distance**	117dB SPL @ 40 m (130ft)
Controllers:	4 x DX38	**Total Amp: Power**	2 x 6.400 W = 12.800 W
Cabling:	6 x NL8 long, 10 x NL8 short	**Accessories:**	4 x XLD Grid, 2 x Coupler-Beam, 3 x XLD Dolly

3 contol segments for optimized array control. Optional drive: 6 x P1200RL & 2 x P3000RL, or 6 x CP2200 & 2 x CP3000RL.
For subbass extension add 2 X-Subs.

System Applications: 6 XLD-Biamp (3 Segments) – L-C-R for Theatre or HOW

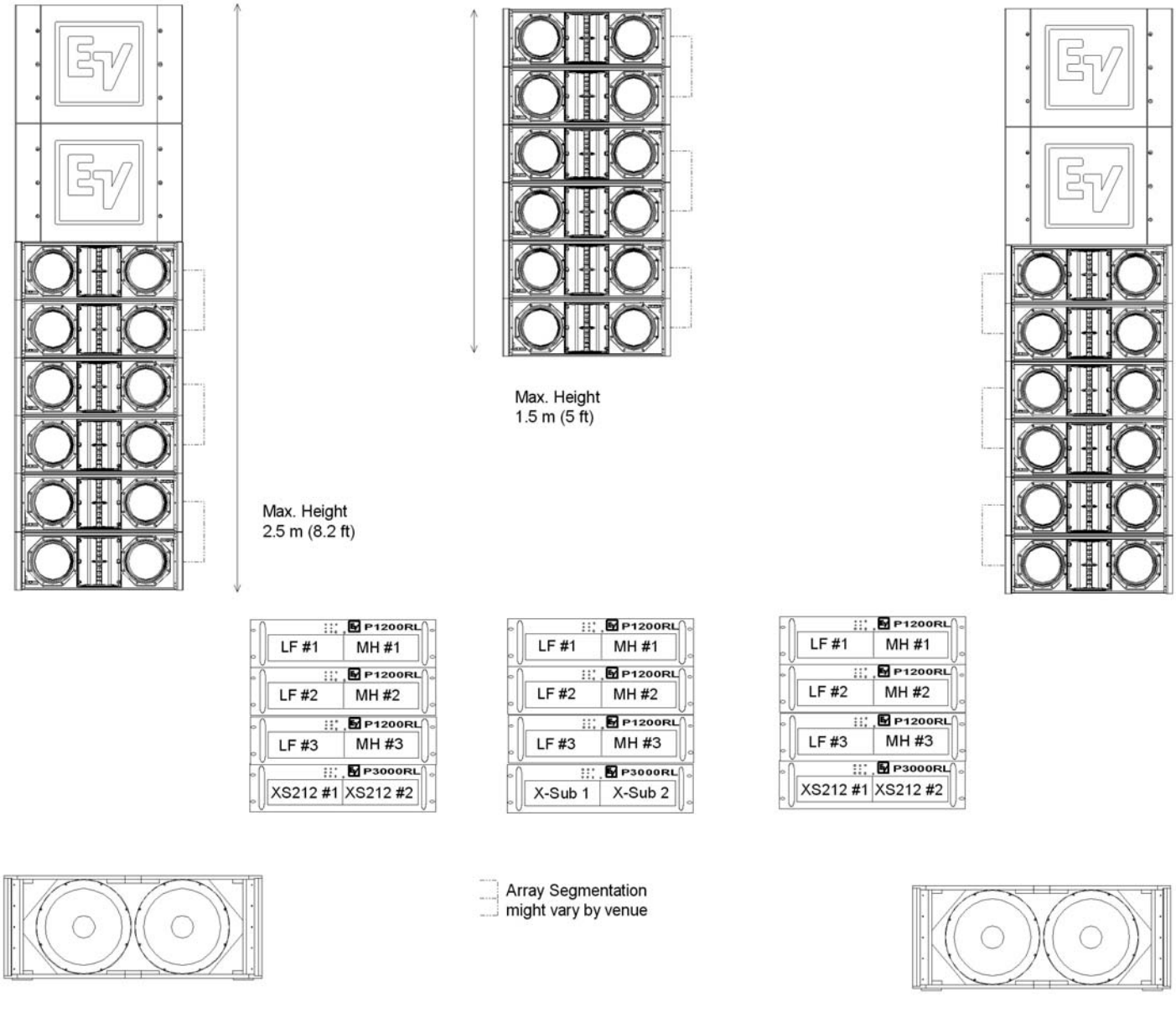

Cabinets:	18 x XLD 281, 4 x XS212, 2 X-Sub	**Horizontal Coverage**	120 deg
Amplifiers:	3 x P3000RL, 9 x P1200RL	**Typical: Distance**	117dB SPL @ 40 m (130ft)
Controllers:	integrated (IRIS software)	**Total Amp: Power**	2 x 7.400 W = 14.800 W
Cabling:	11 x NL8 long, 13 x NL8 short	**Accessories:**	3 x XLD Grid

3 segments for optimized array control. Optional Drive: 9 x CPS2.8 & 3 x CPS2.11, 6 Dx38.

System Applications: 6 XLD-Biamp (3 Segments) – Line-Array with integrated subs

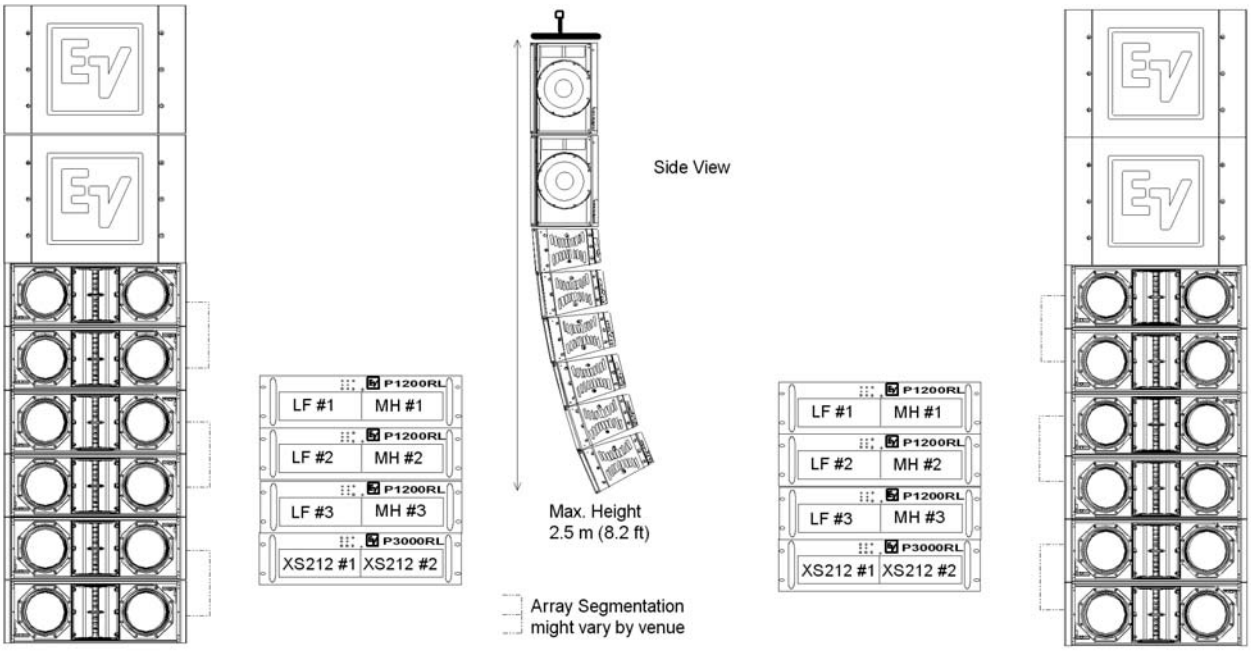

Cabinets:	12 x XLD 281, 4 x XS212	**Horizontal Coverage**	2 x 120 deg
Amplifiers:	2 x P3000RL, 6 x P1200RL	**Typical: Distance**	117dB SPL @ 40 m (130ft)
Controllers:	integrated (IRIS software)	**Total Amp: Power**	2 x 7.400 W = 14.800 W
Cabling:	6 x NL8 long, 10 x NL8 short	**Accessories:**	2 x XLD Grid

3 control segments for optimized array control. Optional Drive: 6 x CPS2.8, 2 x CPS2.11, 4 Dx38. For sub bass extension add 2 X-Sub

System Applications: XLE-181 Fullrange (3 Segments) – Medium Size Auditorium

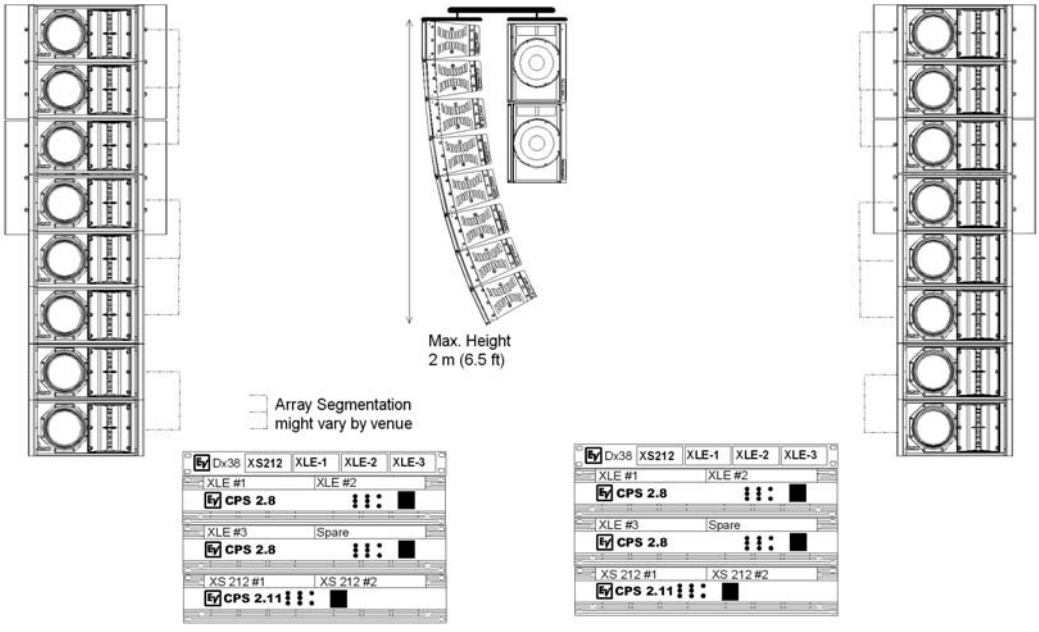

Cabinets:	12 XLE181, 4 XS212	**Horizontal Coverage**	2 x 120 deg
Amplifiers:	4 CPS 2.8, 2 CPS	**Typical: Distance**	116dB SPL @ 35 m (115 ft)
Controllers:	2 Dx38	**Total Amp: Power**	2 x 4.100W = 8.200W
Cabling:	6 long, 14 short	**Accessories:**	2 XLE Grids, 2 XLD Grids, 2 C-Beam

Typical system for auditoriums. 3 control segments. Optional drive: 4 P1200RL, 2 P3000RL

System Applications: 6 XLE-Biamp (3 Segments) – Very-Compact Line Array for Smaller Rooms

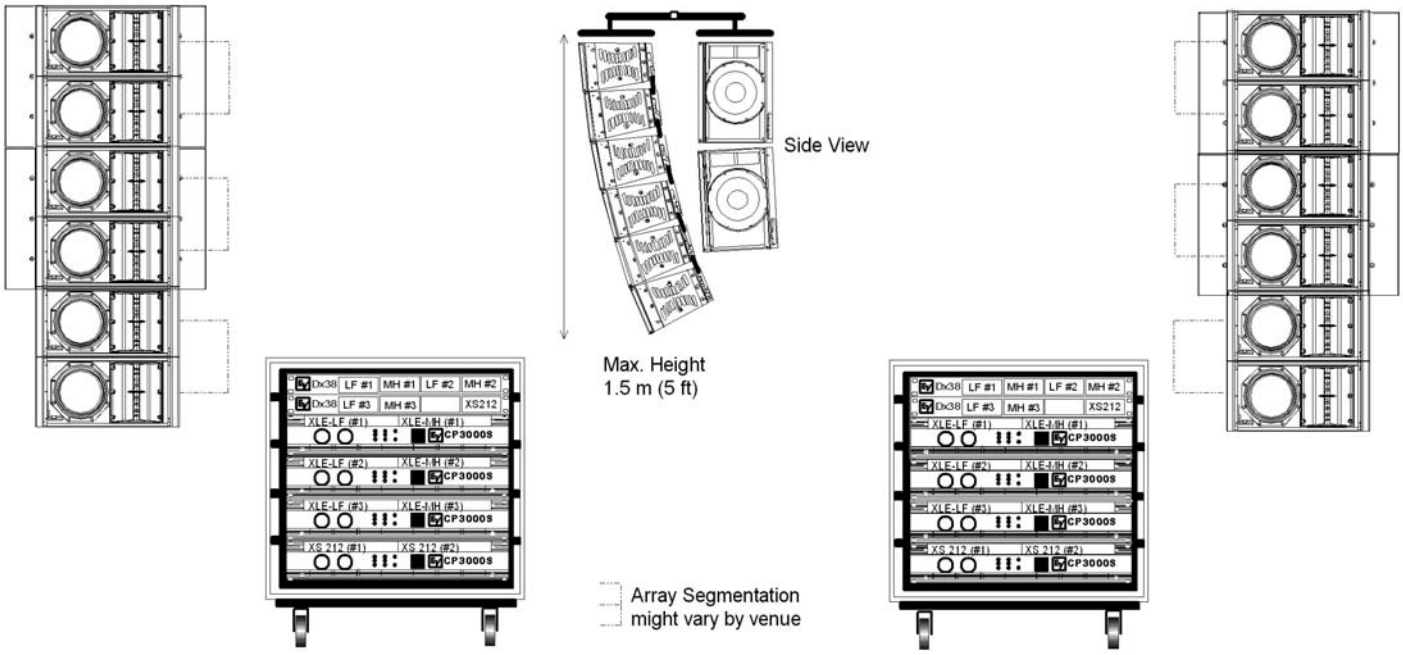

Cabinets:	12 x XLE 181, 4 x XS212	**Horizontal Coverage**	2 x 120 deg
Amplifiers:	8 x CP 3000S	**Typical: Distance**	116dB SPL @ 40 m (130ft)
Controllers:	4 x DX38	**Total Amp: Power**	2 x 6.400 W = 12.800 W
Cabling:	6 x NL8 long, 10 x NL8 short	**Accessories:**	2 x XLE Grid, 2 x XLD Grid, 2 x C-Beam

3 contol segments for optimized array control. Optional drive: 6 x CP2200 & 2 x CP3000S.

System Applications: 8 XLE-Biamp (3 Segments) – Very-Compact Line Array for Smaller Venues

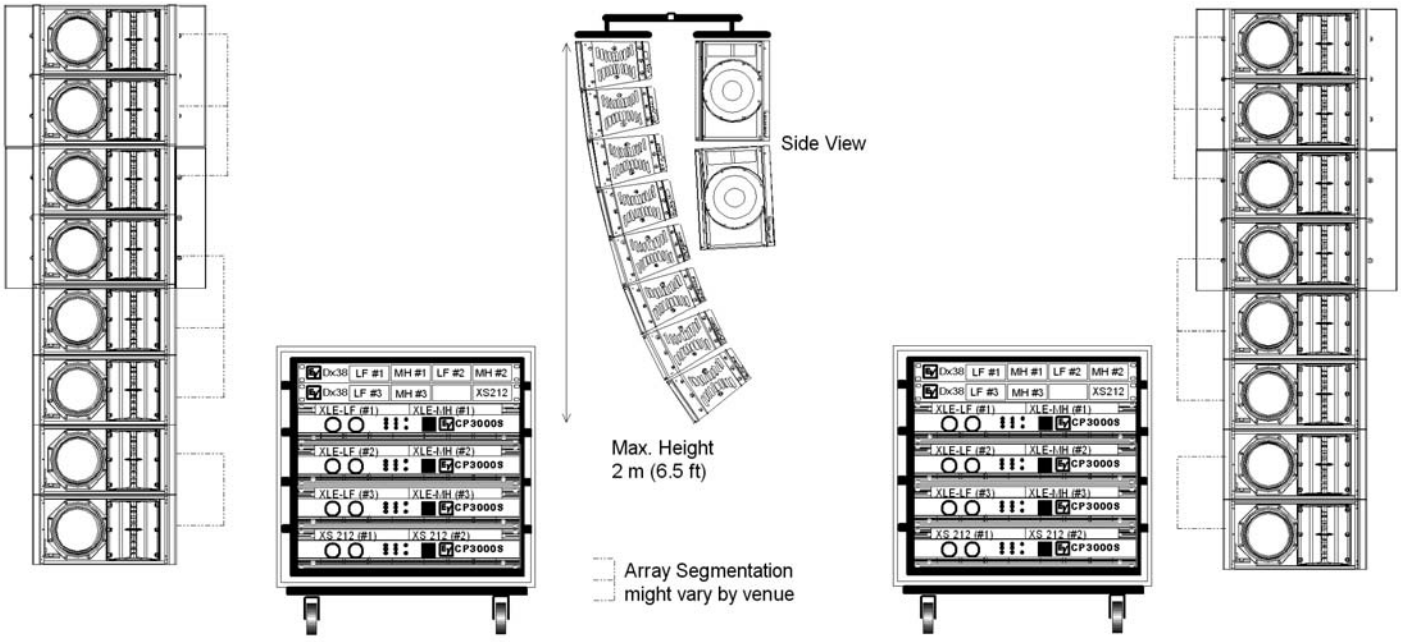

Cabinets:	12 x XLE 181, 4 x XS212	**Horizontal Coverage**	2 x 120 deg
Amplifiers:	8 x CP 3000S	**Typical: Distance**	119dB SPL @ 40 m (130ft)
Controllers:	4 x DX38	**Total Amp: Power**	2 x 6.400 W = 12.800 W
Cabling:	6 x NL8 long, 10 x NL8 short	**Accessories:**	2 x XLE Grid, 2 x XLD Grid, 2 x C-Beam

3 control segments for optimized array control. Optional drive: 6 x CP2200 & 2 x CP3000S. For sub bass extension add 2 X-Sub

Notes

Americas

Telex Communications Inc. 12000 Portland Ave South, Burnsville, MN 55337, USA
USA-Phone: 1-800-392-3497, Fax: 1-800-955-6831
Canada-Phone: 1-866-505-5551, Fax: 1-866-336-8467
Latin America-Phone: 1-952-887-5532, Fax: 1-952-736-4212

Europe, Africa & Middle-East

EVI Audio GmbH, Hirschberger Ring 45, D-94315, Straubing, Germany
Phone: +49 9421-706 0, Fax: +49 9421-706 265
France: EVI Audio France S.A. Parc de Courcerin, Allée Lech Walesa, F 77185 Lognes, France
Phone: +33 1-6480-0090, Fax: +33 1-6006-5103
UK: Shuttlesound Ltd., The Willows Centre, Willow Lane, Mitcham, Surrey CR4 4NX, UK
Phone: +44 208 646 7114, Fax: +44 208 254 5666

Asia & Pacific Rim

Japan: EVI Audio Japan Ltd. 5-3-8 Funabashi, Setagaya-Ku, Tokyo, Japan 156-0055
Phone: +81 3-5316-5020, Fax: +81 3-5316-5031
Australia: EVI Audio (Aust) Pty Ltd. Slough Business Estate, Unit 23, Silverwater, N.S.W. 2128, Australia
Phone: +61 2-9648-3455, Fax: +61 2-9648-5585
China: EVI Audio (HK) Ltd. 7th Floor China Minmetals Tower, No. 79 Chatham Road South, Tsim Sha Tsui, Kowloon, HK
Phone: +852 2351-3628, Fax: +852 2351-3329
Singapore: Telex Pte. Ltd. 3015A Ubi Road 1, 05-10 Kampong Ubi Industrial Estate, Singapore 408705
Phone: +65 6746-8760, Fax: +65 6746-1206

© 2005 EVI Audio GmbH · Internet: www.electrovoice.com · SUBJECT TO CHANGE WITHOUT PRIOR NOTICE