SM-EZ Series

Install Instructions For:

SM52-EZ-BK, SM52-EZ-WH, SM52-EZ-WX-BK, SM52-EZ-WX-WH,
SM82-EZ-II-BK, SM82-EZ-II-WH, SM82-EZ-II-WX-BK & SM82-EZ-II-WX-WH

Box contents

1 Speaker
1 U-bracket
3 U-bracket screws
2 Screw caps
1 Allen wrench
1 Back plate
1 Port plug
1 Safety cable
1 Strain relief bushing

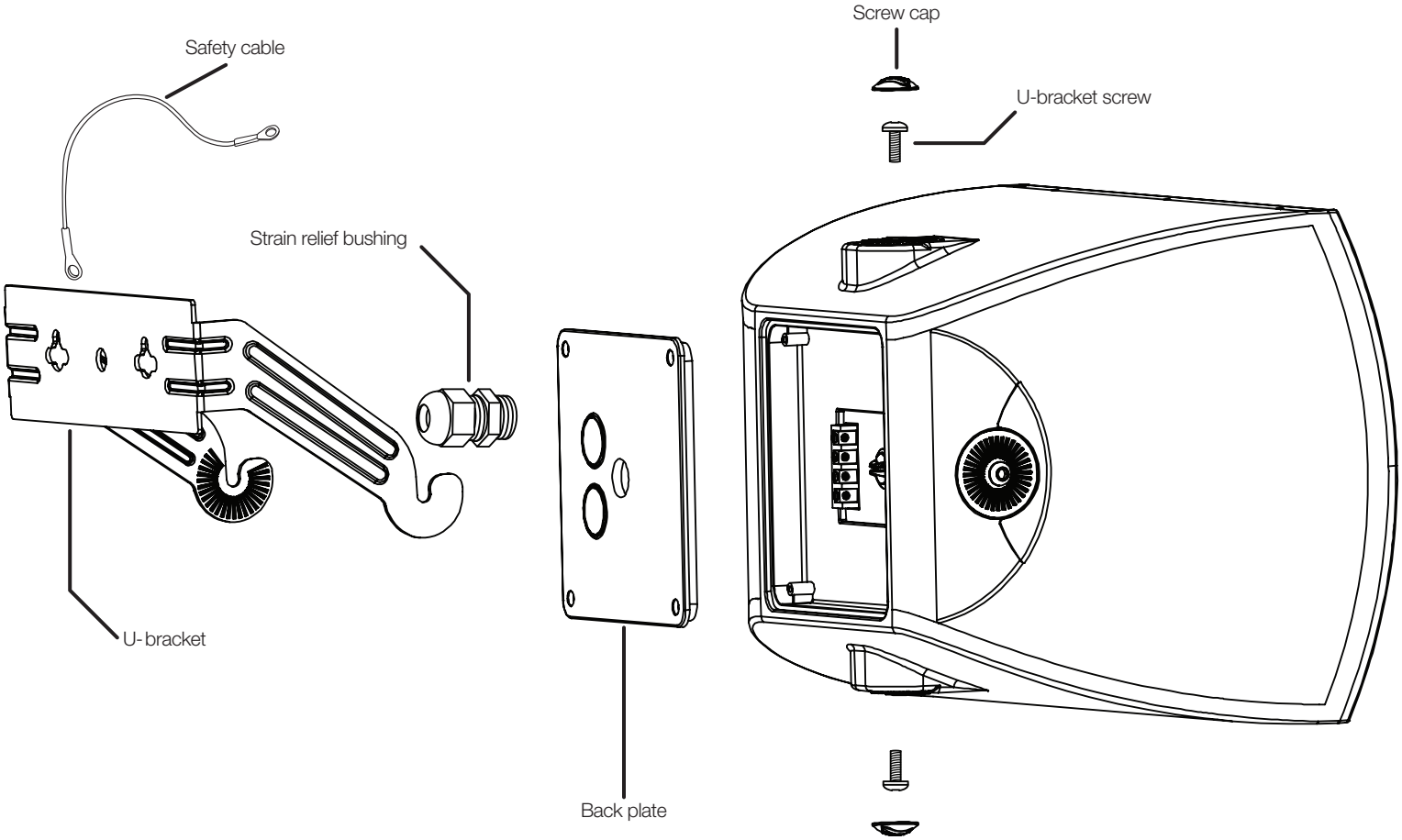

913.663.5600 | www.soundtube.com

© 2023 SoundTube Entertainment, Inc. All rights reserved. PN INS-SM-EZ Rev 5-06-2025

Warning

SoundTube speakers must be installed by a professional audio installer/contractor. For safety and for optimum audio performance, installer must follow all directions issued by SoundTube Entertainment.

Warning

Do not spec or install speaker near support beam, ventilation duct or other structure that may interfere with speaker function or dispersion.

SM-EZ Series

Install Instructions For:

SM52-EZ-BK, SM52-EZ-WH, SM52-EZ-WX-BK, SM52-EZ-WX-WH,
SM82-EZ-II-BK, SM82-EZ-II-WH, SM82-EZ-II-WX-BK & SM82-EZ-II-WX-WH

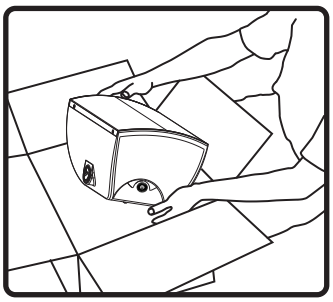

1. Unpack speaker and mounting hardware.

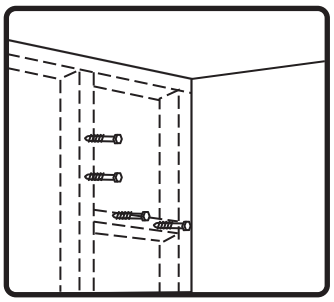

2. Choose a secure mounting surface with sufficient strength to reliably hold the speaker. The speaker may be mounted in either the vertical or the horizontal position with the same U-bracket.

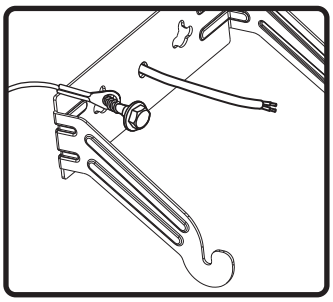

3. Mount u-bracket with clamping slots pointing upward. Securely fasten mounting bracket and safety cable to surface (user must supply fasteners).
Note: The safety cable will attach to one of the speaker's unused mounting holes using one of the included mounting screws.

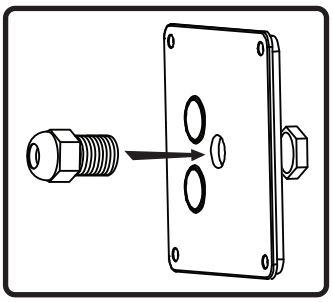

4. If being installed per EN54-24 regulations or in instances where a water tight strain relief bushing is necessary, attach the included strain relief bushing to the back plate. If it is not required, skip this step.

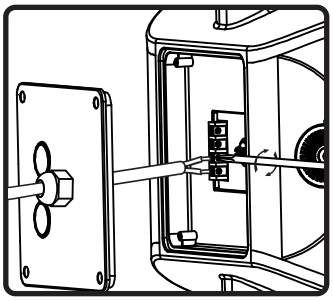

5. Run signal wires through strain relief bushing then connect to ceramic terminal strip. Two + (positive) and two - (negative) connectors are provided for daisy chaining.

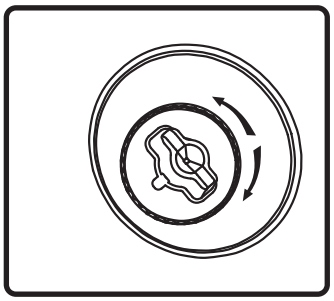

6. Select the tap position by rotating the rotary switch located on the back of the speaker to desired setting. The switch is preset to the maximum tap setting in 70.7 V mode (32W for the SM52-EZ[-WX] and 64W for the SM-82-EZ-II[-WX]).

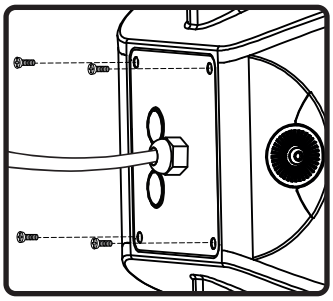

7. Install back plate and secure with included fasteners.

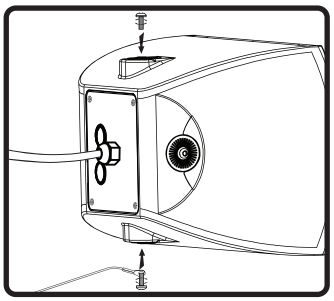

8. Select desired location for safety cable install using U-bracket mounting screw. If mounting speaker horizontally, attach safety cable to one of the vertical mounting points and vice versa.

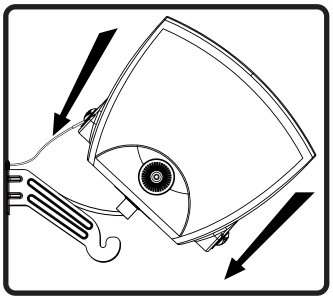

9. Tilt speaker 45º (grille up) and slide on to bracket.

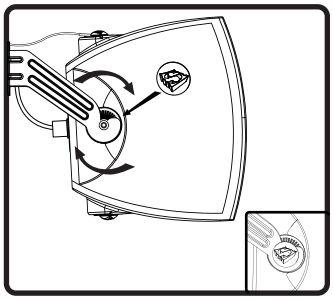

10. Aim speaker and tighten u-bracket screws. In outdoor applications, do NOT angle speaker above horizontal in order to ensure protection from water ingress. Once tightened down, place the screw caps on the screws. Done!

Port protection for SM-EZ

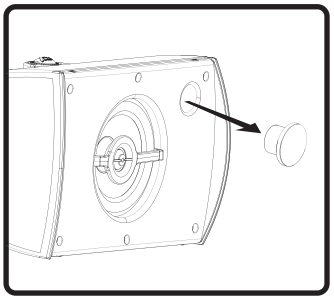

If used indoors, remove the grille and take the plug out of the port for greater bass output. Port must remain plugged to maintain IP65 rating in outdoor use.