SM400i

Surface-Mount Speaker

SM400i PRODUCT SPECIFICATIONS

System Type	4”, coaxial, surface-mount, ported (20 W transformer for 25/70.7/100 V or transformer bypass)
Impedance (Nominal)	4 Ω
Sensitivity dB @ 2.83 V / 1 M [3]	85.5 dB
Sensitivity dB @ 1 W / 1 M [4]	82.5 dB
Frequency Response (±3 dB) [1]	97 Hz - 22 kHz
Frequency Response (±10 dB) [1]	76 Hz - 22 kHz
Max. Program Power	35 W
Max. Continuous Power RMS [2]	20 W
Max. SPL dB @ 1 M	95.5 dB
Coverage Angle (±6 dB @ 2 kHz)	125° Horizontal | 165° Vertical
Coverage Angle (±6 dB @ 10 kHz)	75° Horizontal | 70° Vertical
Coverage Angle (Avg. 2-10 kHz)	125° Horizontal | 125° Vertical
Angle of Pointability	0° - 90° Horizontal
Directivity Factor (Q)	3.7 (averaged 100 Hz - 10 kHz) | 3.9 @ 2 kHz
Directivity Index (DI)	4.9 dB (averaged 100 Hz - 10 kHz) | 5.9 dB @ 2 kHz
Tap Selector	Weatherproof, five-position tap switch with transformer bypass position
Low-Frequency Driver	1 x 102 mm (4”) polypropylene cone, butyl rubber surround
High-Frequency Driver	25.4 mm (1”) convex titanium tweeter with waveguide
Low-Frequency Voice Coil	25.4 mm (1”)
Crossover Frequency	2.3 kHz
Network Type: Low Pass	12 dB per octave, 2nd order
Network Type: High Pass	12 dB per octave, 2nd order
Enclosure Material	Injection-molded ABS, glass fiber reinforced
Grille Material	Powder-coated aluminum
Inputs	Four-pin, 5.08 mm Euroblock for individual or daisy chain connection
Color	Black or white (custom colors available)
Height	177 mm | 6.97”
Width	245.9 mm | 9.68”
Depth (Including Bracket)	189.7 mm | 7.47”
Weight	2.4 kg | 5.3 lbs
Shipping Weight	3.3 kg | 7.3 lbs
Included Accessories	Corrosion and theft-resistant U-bracket mount with safety cable, Euroblock connector, terminal weather boot, and port plugs
Packaging	One per box
IP-Rating	IP4X
Certifications	CE, RoHS, UL 1480A

[1] Frequency response is measured in full space
[2] Continue power rating, EIA-426-B test
[3] Average over published frequency response range
[4] 1 W / 1 M sensitivity based on voltage required to yield 1 W based on the minimum system impedance.

Description

The SM400i is a 4”, coaxial, ported speaker with a low-profile surface-mount enclosure design for indoor/outdoor applications that delivers a consistent dispersion pattern (2-10 kHz, independently verified). Mounting hardware is included and features a corrosion and theft-resistant Stealth™ U-bracket for easy and secure installation. Nearly invisible from sight-lines, the Stealth U-bracket includes one way fasteners for tool-free theft-resistant security.

SoundTube’s custom-engineered driver and electro-acoustic network deliver high-performance sound in a cost-effective, surface-mount speaker design. The SM400i speaker incorporates a five-position tap switch with transformer bypass position for simplified ordering and stocking. Included port plugs can be used for added weather resistance.

Features

- BroadBeam® waveguide technology delivers a consistent dispersion pattern up to 10 kHz for maximum coverage area per speaker (independently verified).
- One 4” (102 mm) polypropylene woofer and one 1” (25.4 mm) convex titanium tweeter with FerroFluid cooling.
- Includes port plugs and weatherized components for indoor and outdoor applications.
- Patented ZeroReflection™ enclosure technology for optimal sound reproduction and cabinet rigidity.
- Easy access, five-position selectable tap switch for 25, 70.7, and 100 V applications with transformer bypass position.
- Iridite-plated aluminum grille with protective powder-coated finish for lasting durability.
- Includes a tool-free Stealth™ U-bracket mounting system for fast and secure installation.
- Vertical and horizontal mounting offer precision aiming for indoor and outdoor applications.
- UL 1480A and CE approved.
- High-quality black or white paint finish. Custom colors available.
- Included accessories: corrosion and theft-resistant U-bracket mount with safety cable, Euroblock connector, terminal weather boot, and port plugs.
- Optional port plugs are included for added weather resistance.

SM400i

Surface-Mount Speaker

Transformer Taps

70.7 V	Output	100 V	Output	25 V	Output
20 W	95.5 dB	20 W	95.5 dB	2.5 W	86.5 dB
10 W	92.5 dB	10 W	92.5 dB	1 W	83.5 dB
5 W	89.5 dB	5 W	89.5 dB	0.63 W	80.5 dB
3 W	86.5 dB			0.31 W	77.5 dB

Applications

Engineered with professional grade components, the SM400i delivers high-quality music and messaging for indoor and outdoor background to mid-level SPL applications. Cost-effective engineering with high-performance sound makes the SM400i speaker ideal for applications including retail, grocery stores, restaurants, hotels, casinos, museums, trade shows, and conference rooms. For applications where additional bass is required, SoundTube's RS1001i-II-T subwoofer provides bass down to 41 Hz.

BroadBeam® Wide Dispersion Technology

SoundTube's proprietary BroadBeam technology incorporates a high-frequency waveguide mated to a 1" convex aluminum tweeter. BroadBeam waveguide technology delivers a consistent BroadBeam dispersion pattern across the upper registers of the frequency spectrum. The result is an audio system requiring fewer speakers with higher intelligibility, offering reduced powder needs, shorter installation time and cost savings on shipping and labor.

Patented Technologies

SoundTube Entertainment constantly develops new technologies which enhance audio product performance. SoundTube Entertainment innovations are protected by multiple U.S. and international patents, which explicitly cover SoundTube dome, enclosure and dispersion technologies. SoundTube actively defends its patents in order to protect SoundTube resellers and end-users.

Technical Data and Specification Tools

SoundTube Entertainment strives to provide complete and effective technical information and data to dealers, engineers and designers. All data is available from SoundTube Entertainment or at www.soundtube.com.

Technical data and downloads include:

- EASE™ data - 3-D polar plots.
- EASE™ Address - 2-D modeling for distributed systems
- AutoDesk® Revit® software
- Tech Sheets - technical information and architectural specs for system engineers
- SoundTubeSPEC™ - Proprietary speaker placement software

Independent Data Acquisition and Verification

All data for SoundTube speakers is independently collected from and verified by NWAA Labs (www.nwaalabs.com) using their proprietary MACH testing system. All data is collected and analyzed according to ASTM, ISO and AES standards using EASERA, TEF and MLSSA. Full balloon data including both phase and magnitude is compiled into a variety of formats including EASE 4.x, GLL and CLF.

Architectural Specifications

The loudspeaker shall consist of a 102 mm (4") polypropylene woofer and one 25.4 mm (1") convex titanium tweeter with FerroFluid cooling.

Performance specifications of a typical production unit shall be as follows: Usable frequency response shall extend to 76 Hz (±10 dB, full space, independently verified). Measured sensitivity (2.83 V input, 1 M) shall be at least 85.5 dB. The speaker shall have a nominal impedance of 4 Ω and be available for 25, 70.7, and 100 V modes and transformer bypass. The frequency dividing network shall have a crossover frequency of 2.27 kHz with slopes of 12 dB per octave (2nd order) for both low and high pass filters. Rated power capacity shall be at least 20 W continuous (RMS) and conform to EIA-426-B testing. Maximum continuous output at 1 M shall be 95.5 dB.

The low-frequency transducer shall have a polypropylene cone with butyl rubber surround. The high-frequency transducer shall be constructed of titanium with a proprietary BroadBeam waveguide.

Installation and safety attachment for the speaker shall be by Stealth U-bracket affixed to the speaker chassis via ABS handle with steel insert and shall include a safety cable for safety redundancy. The external wiring input connector shall be a four-pin, 5.08 mm Euroblock for 4 Ω or distributed systems and shall accept from 10 - 22-gauge wire. The system shall be for indoor and outdoor applications and shall have a weather-resistant terminal boot covering all wire connectors.

The enclosure shall be constructed of injection-molded ABS with optional port plug for added weather resistance. The plugs shall be constructed of closed-cell foam. The grille shall be constructed of powder-coated aluminum for lasting performance in the elements. The unit shall include mounting hardware, Euroblock connector and weather-resistant terminal boot. The maximum overall cabinet dimensions shall be 177 mm (6.97") in height by 245.9 mm (9.68") in width by 190 mm (7.47") in depth (including Stealth bracket).

The system shall be the SoundTube SM400i with mounting hardware for both low and high impedance applications.

SoundTube®

13720 W. 109th St.
Lenexa, KS 66215
Phone: 913.663.5600
Fax: 913.663.3200
Toll Free: 855.663.5600
www.soundtube.com

All SoundTube speakers come with a 5-year limited warranty and 3-year warranty on all electronics.

SM400i

Surface-Mount Speaker

Mechanical Drawings

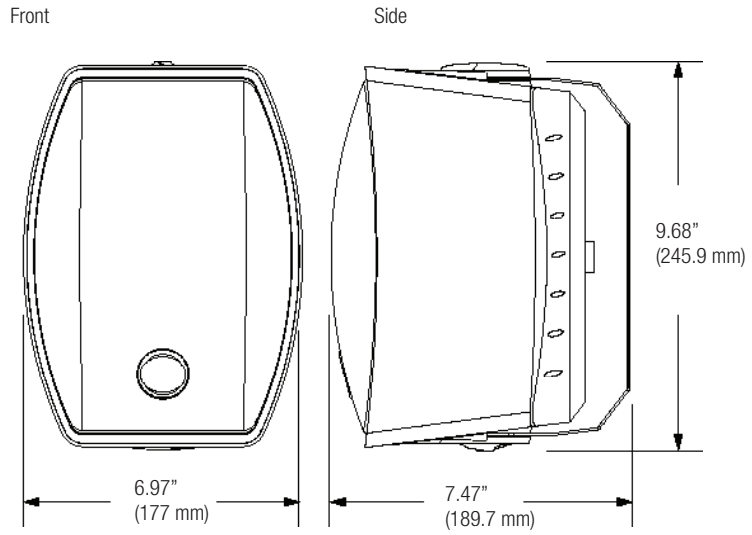

Plots

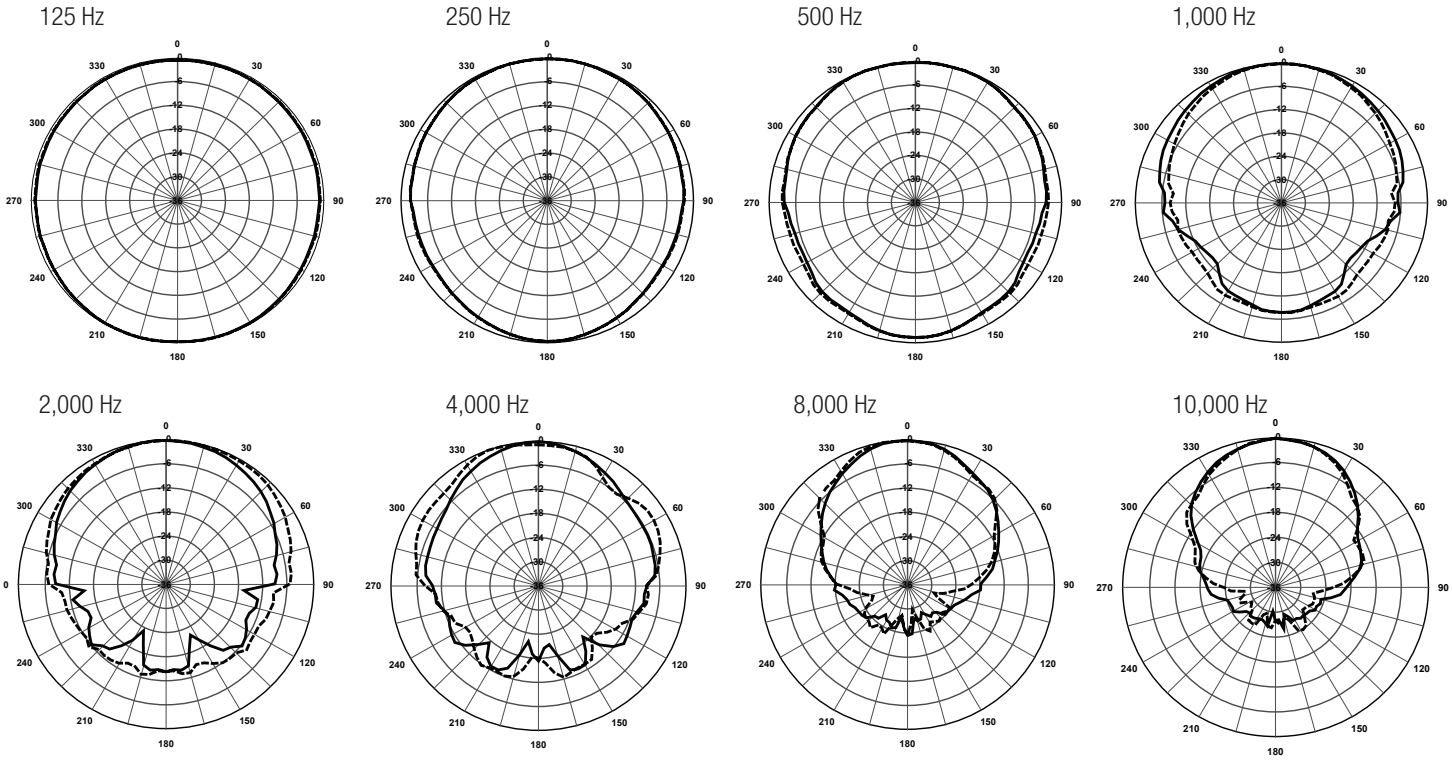

Technical data, EASE™ plots, SoundTubeSPEC™ software and product downloads available at www.soundtube.com

Graphs

Frequency Response

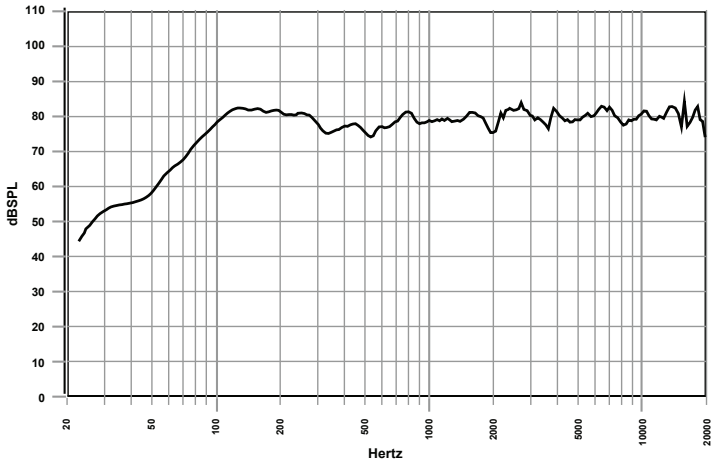

Phase/Impedance Response

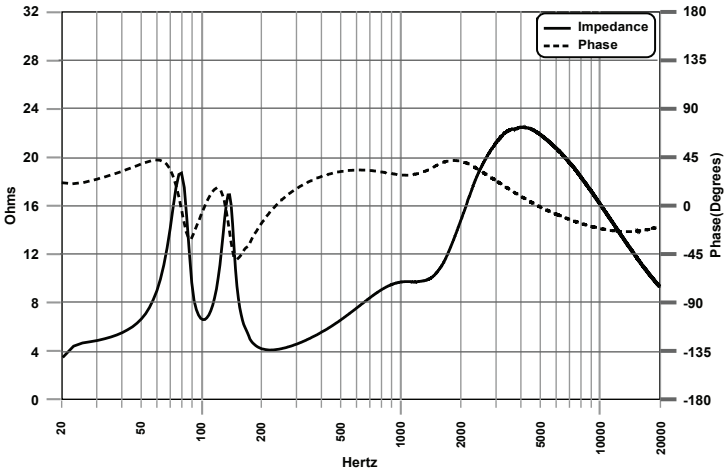

Vertical Beamwidth (±6 dB)

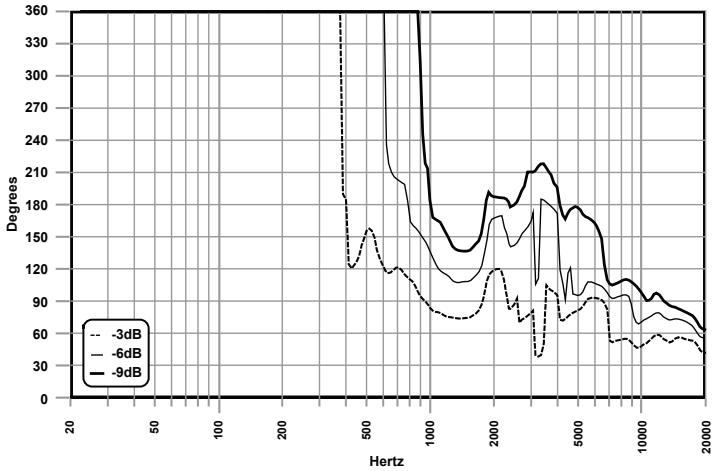
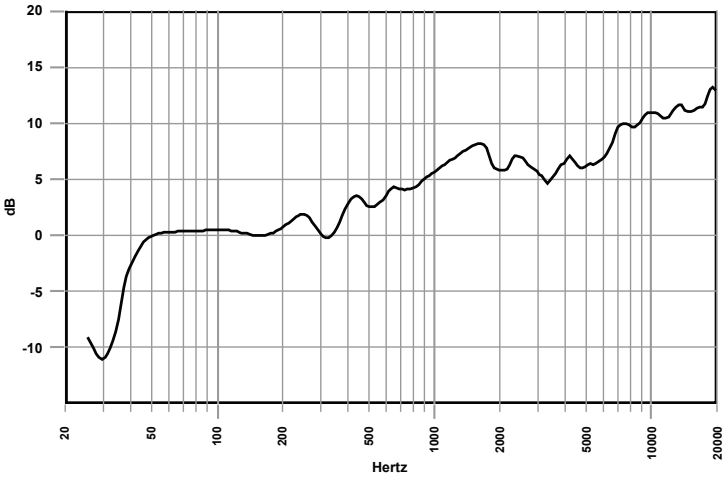
Directivity Index (DI)