INDUCTION DYNAMICS®
SolidDrive®
SOUND WITHOUT SPEAKERS™

SolidDrive SD1 Specifications

Type	Full Range Transducer
Impedance	8 Ohm
Frequency Response (Hz)	70 Hz to 15 kHz
Recommended Amplifier Power	10 – 100 Watts
Dimensions	2.28" Diameter x 2.08" Height Mounting Plate 3.5" Diameter
Weight	1.2 lb / .54 kg
UL Listing	1480 & 2043

NOTE: When installed in Canada, this product must be installed in accordance with the Canadian Electrical Code, C22.1, Part1.

SolidDrive SD1 In-Wall and In-Ceiling Mounting Bracket Specifications

Type	Patented balanced cantilever spring bracket
Construction	Heavy duty, galvanized steel
Dimensions	12OC – 2.0" H x 13.5" W x 5.0" D 16OC – 2.0" H x 17.5" W x 5.0" D 24OC – 2.0" H x 25.5" W x 5.0" D
Weight	1.0 lb / .45 kg

WARRANTY
SolidDrives, SolidDrive subwoofers, and A4 amplifiers are guaranteed for 7 years from date of purchase. Any misuses or modifications to this equipment in any way will void the warranty.

WARNING
Read instructions prior to operating. To reduce the risk of fire or electric shock, do not expose this product to rain or moisture. Unplug prior to cleaning and clean with a damp cloth. There are no user-serviceable parts in this product, please refer all servicing to qualified personnel.

13720 W 109th St. • Lenexa, KS 66215
TEL: 855.663.9770 • FAX: 913.663.9790 • www.soliddrive.com

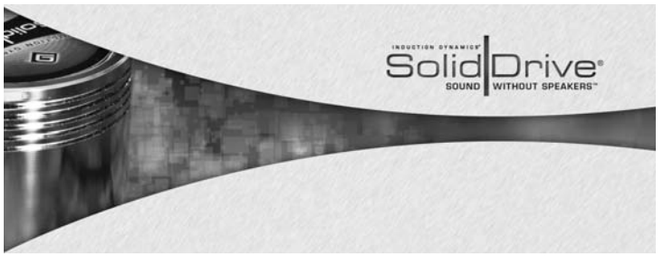

SolidDrive

INSTALLATION & USE GUIDE

for SolidDrive SD1 into walls and ceilings

Experience Audio Perfection

Induction Dynamics extensive line of audio products makes it easy to create the ultimate audio system, regardless of installation requirements. Induction Dynamics builds these products with only the most select components and materials; and utilizes numerous unique and proven technologies.

INSTALLATION OF SOLIDDRIVE SD1 INTO WALLS AND CEILINGS

By utilizing these basic installation steps, you can install the SolidDrive SD1 into walls and ceilings to create sound for boardrooms, home theater, and distributed audio.

GETTING STARTED WITH SOLIDDRIVE

What's included with the SolidDrive SD1 for installation into walls and ceilings and what is supplied by the installer —

A SolidDrive SD1 consists of: One (1) SolidDrive SD1 unit and attached wiring harness with Eurostyle connector. *Additional mounting materials may need to be ordered with the SolidDrive SD1 or supplied by the installer depending on the application.

For drywall: For in-wall and in-ceiling installation, you will have ordered one (1) or more SolidDrive SD1s and one (1) or more patented acoustic in-wall mounting brackets (one (1) bracket per SD1), which comes with four (4) #8-32 x 5/16" Phillips flat head machine screws for mounting the drive to the bracket. At the time of the order, you will also have specified mounting bracket(s) in widths of 12OC, 16OC, or 24OC (ON CENTER of wall studs or ceiling joists) for proper width.

*Installation also requires four (4) 1 3/8" drywall screws and one (1) container of 3M® Super 77 Spray Adhesive (supplied by the installer).

EXISTING DRYWALL INSTALLATION NOTE:

For retrofitting the SolidDrive SD1 into existing drywall installations, it will be necessary to remove a portion of the existing drywall before installation and to replace the drywall after the SolidDrive SD1 is installed. Please refer to the instructions marked with EXISTING DRYWALL for the steps necessary for the type of installation. If installing the SolidDrive SD1 in new construction, IGNORE the EXISTING DRYWALL steps.

STEP 1
INSTALLATION INTO EXISTING DRYWALL
Cut a rectangle opening in the wall

For installing the SolidDrive SD1 mounting bracket into existing drywall, first cut a rectangular opening in the drywall. The minimum recommended opening size is approximately fifteen inches tall and beyond the width of the adjacent wall studs. This will help in attaching the mounting bracket, feathering the drywall back in, and getting the drywall to meet at the seams (Figure 1). This will allow proper distribution of sound and the SolidDrive SD1 will function with optimum performance.

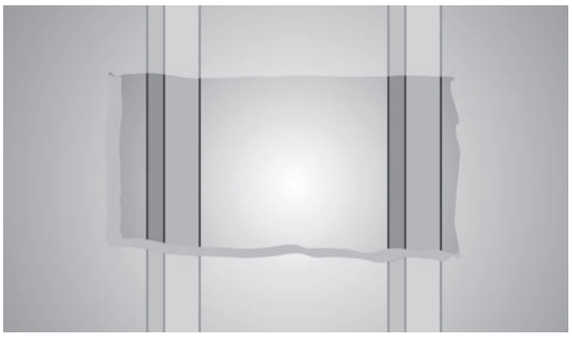

Figure 1 Cut an opening large enough to install the mounting bracket to the wall studs

STEP 2
Attach the SolidDrive mounting bracket to wall studs or ceiling joists

Place the mounting bracket between the wall studs or ceiling joists and secure with two 1 3/8" drywall screws. Insert the screws through the two pre-drilled holes in each flange and screw them into the face of each wall stud or ceiling joist (Figure 2). The drywall screws need to be driven flush with the surface of the flange so that the drywall sets flush on the bracket flange. ***NOTE: If installing the SD1 in existing drywall using the optional heat sink, install the SD1 into the mounting bracket as described in step 3 below, then install the heat sink over the SD1 before mounting the bracket to the studs. To install the heat sink, slide it over the SD1 housing body and tighten with the included mini hex key. DO NOT OVERTIGHTEN as this could strip the screw.***

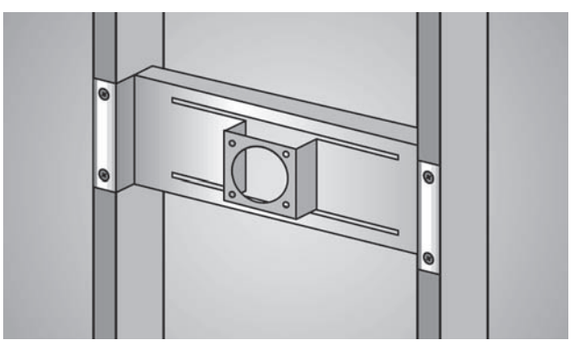

Figure 2 SolidDrive SD1 mounting bracket attached to the wall studs

STEP 3
Insert the SolidDrive into the bracket

Feed the SolidDrive SD1 cable through the round opening in the face of the mounting bracket. Insert the SolidDrive SD1 through the same opening with the oversized mounting base facing outward toward the side that the drywall will be installed and flush against the bracket face. Align the pre-drilled holes in the mounting base to the threaded holes in the bracket face (Figure 3). Attach the SolidDrive SD1 securely to the mounting bracket using the 4 Phillips flat head machine screws.

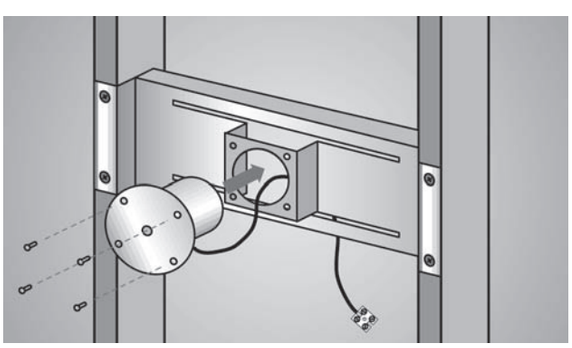

Figure 3 SolidDrive SD1 being installed into the mounting bracket

STEP 4
Make the electrical connections

Make the electrical connection between the SolidDrive SD1 and the speaker cable using the Eurostyle connector attached to the end of the SolidDrive SD1 audio cable. The polarity of the wiring is clearly indicated (Figure 4). ***NOTE: When installed in Canada, this product must be installed in accordance with the Canadian Electrical Code, C22.1, Part1.***

Figure 4 Eurostyle connector

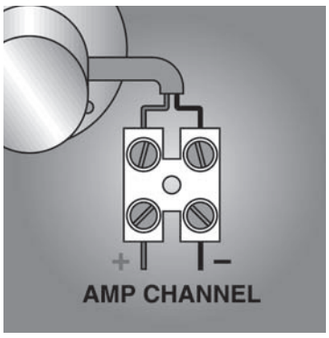

STEP 5
Apply adhesive to the drywall surface and base of the SolidDrive

If possible, position the SolidDrive SD1 near the center of the drywall panel or away from the edge of the panel. Prior to mounting, determine the area that will come in contact with the base of the SolidDrive SD1, and spray that area liberally with the 3M® Super 77 contact spray adhesive. Also, spray a thin layer on the surface of the oversized mounting base of the SolidDrive SD1 (masking around the base is recommended to prevent overspray). ***NOTE: Failure to apply the adhesive to both the drywall surface and oversized mounting base will prevent the system from functioning properly.***

STEP 6
EXISTING DRYWALL
Re-install rectangular cutout in wall

For re-installing the rectangle drywall panel that was cut out to install the SolidDrive SD1, it is important to create a uniform seal between the cut drywall and the existing drywall. This will allow proper distribution of sound and the SolidDrive SD1 will function with optimum performance. Apply fast setting joint compound, not vinyl based, in the space between the cutout section and the existing drywall panel. Make sure to fill the space completely with drywall compound then proceed with the normal taping, sanding and finishing routine.

STEP 7
Install the new drywall

Immediately install the new drywall before the spray adhesive sets up (approximately 10 minutes). This allows adjustment of the panel before the final location is determined. The drywall panel is to be fitted to the wall studs or ceiling joists and screwed into position. Apply joint compound in the space between the drywall panels and proceed with the normal taping, sanding and finishing routine. The joint compound filled between the panels will improve the distribution of sound as well as overall sound quality.

STEP 8
Equalize the SolidDrive sound system

The surface material plays a key role in the system's sound performance. To ensure an optimal listening experience the installer MUST equalize the SolidDrive SD1 system. Equalization is accomplished by using the optional SolidDrive Drywall Passive Equalization Module (not UL approved) or using the auto equalization feature available on some receivers.

Installation is now complete, you can enjoy the audio perfection of the Induction Dynamics SolidDrive SD1 sound system.

HIGH OUTPUT INSTALLATIONS

For installations requiring high output, such as a home theater or other high output type applications, two SolidDrive SD1's should be used for each of the high output channels (for example the left, right, and center channel of a home theater or the left and right channels of a high output stereo system). The two SD1's should be wired in parallel for each of the high output channels (Figure 5). For maximum output each SolidDrive channel should have available at least 20 square feet of surface area.

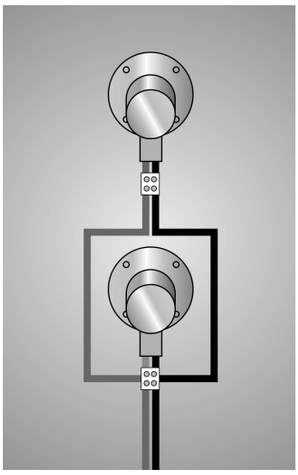

Figure 5 SolidDrive wired in parallel