SOUNDTUBE®

SB335 | Install Instructions For:

SB335

The SB335 is a 2 or 3 channel amplifier with Dolby Digital decoding. It is designed to be used with either an analog or digital input from a TV or other audio source. With a digital input it automatically senses Dolby Digital and PCM and switches modes. The SB335 takes the input signal from an audio source, decodes it and outputs either a 2 or 3 channel amplified signal to a sound bar or set of speakers. When set in the 2 channel mode it will take a stereo or multi-channel signal and mix it down to 2 output channels (left and right). When set in the 3 channel mode it will take a stereo or multi-channel signal and mix it into 3 output channels (left, right and center). In either mode there is a sub out option.

When used in place of internal TV speakers, change the TV's audio setting to external speakers. Teach the SB335 the TV's volume codes and it seamlessly operates with no additional remotes.

Box Contents

1- Amplifier
1- Bluetooth® antenna
1- IR receiver with 1m cord
1- 32 V, 3.75 A power supply
1- Six-pin Euroblock connectors
1- Three-pin Euroblock connectors
1- Mounting bracket
2- 2" Velcro strips
1- Double sided tape disk for IR receiver

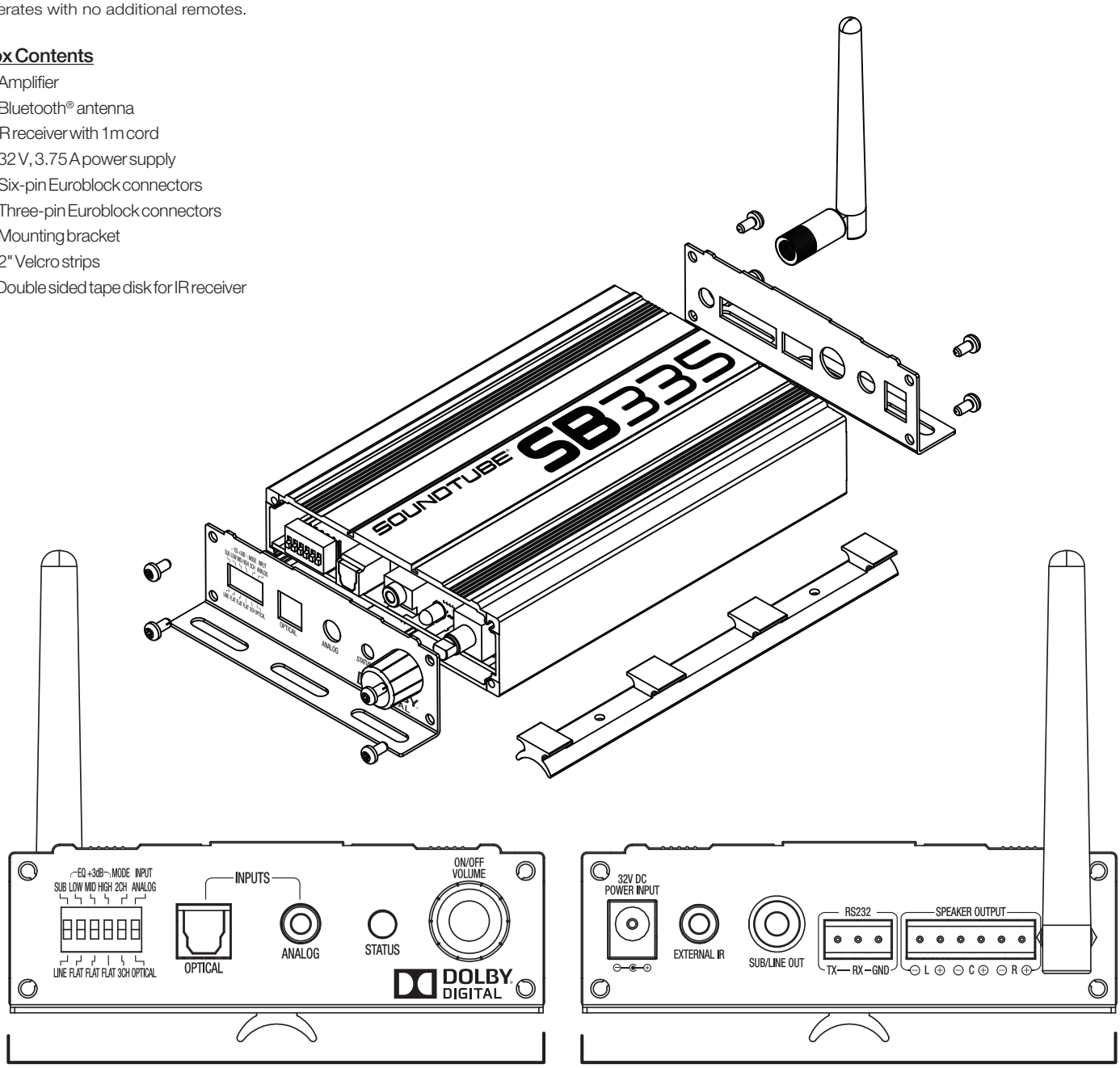

Front

Rear

www.soundtube.com | 855.663.5600 | sales@soundtube.com

© 2015 SoundTube Entertainment, Inc. All rights reserved. PN INS-SB335 Rev10.21.2025

Warning

SoundTube products must be installed by a professional audio installer/contractor. For safety and for optimum audio performance, installer must follow all directions issued by SoundTube Entertainment.

IMPORTANT SAFETY INFORMATION

1. Read these instructions.

2. Keep these instructions.

3. Heed all warning.

4. Follow all instructions

5. Do not use this apparatus near water.

6. Clean only with dry cloth.

7. Do not block any ventilation openings. Install in accordance with manufacturer's instructions.

8. Do not install near any heat sources such as radiators, heat registers, stoves, or other apparatus (including amplifiers) that produce heat.

9. Do not defeat the safety purpose of the polarized or grounding-type plug. A polarized plug has two blades with one wider than the other. A grounding type plug has two blades and a third grounding prong. The wide blade or the third prong are provided for your safety. If the provided plug does not fit into your outlet, consult an electrician for replacement of the obsolete outlet.

10. Protect the power cord from being walked on or pinched particularly at plugs, convenience receptacles, and the point where they exit from the apparatus.

11. Only use attachments/accessories specified by the manufacturer.

12. Use only with the cart, stand, tripod, bracked, or table specified by the manufacturer, or sold with the apparatus. When a cart is used, use caution when moving the cart/apparatus combination to avoid injury from tip-over.

13. Unplug this apparatus during lighting storms or when unused for long periods of time.

14. Refer all servicing to qualified service personnel. Servicing is required when the apparatus has been damaged in any way, such as power-supply cold or plug is damaged, liquid has been spilled or object have fallen into the apparatus, the apparatus has been exposed to rain or moisture, does not operate normally, or has been dropped.

WARNING:

To reduced the risk of fire or electric shock, do not expose this apparatus to rain or moisture

The apparatus shall not be exposed to dripping or splashing and that no objects filled with liquids, such as vases, shall be placed on the apparatus.

DOLBY DIGITAL Manufactured under license from Dolby Labroatories. Dolby and the double-D symbol are registeres trademarks of Dolby Laboratories.

SB335 | Install Instructions For:

SB335

Mounting the SB335

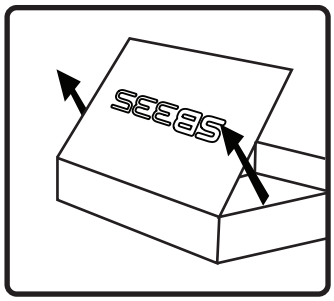

1. Unpack amplifier.

Note: Follow steps 2-5 if using the mounting adapter. If not skip to step 6.

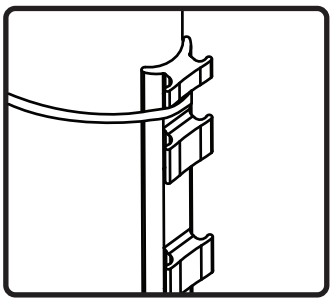

2. Attach mounting bracket to a secure pole or surface using screws or metal strapping.

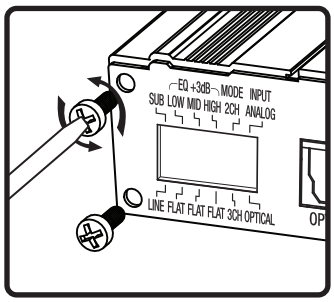

3. To attach mounting bracket, remove all faceplate screws from one side. Lift faceplate and set aside.

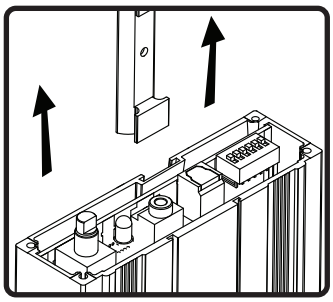

4. Slide mounting bracket into groove on bottom of amplifer enclosure.

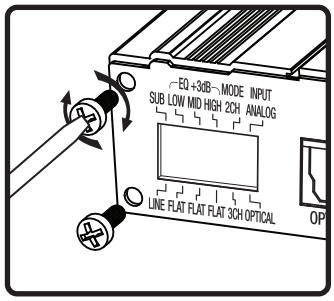

5. Replace faceplate screws

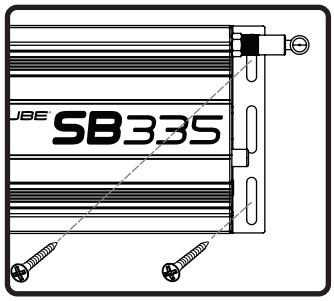

6. If mounting to a flat surface use 2 screws through the mounting bracket on each end of the amp.

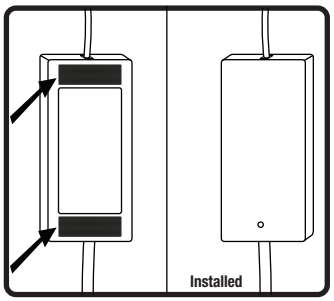

7. The power supply can be attached to a mounting surface using the Velcro strips. Make sure the velcro is placed on outer most plastic portion of the power supply (do not stick it to the label).

Speaker Connections

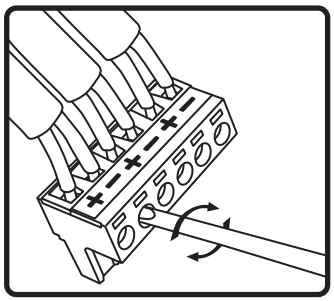

1. to connect wires to the Euro-Block connector loosen the screws, insert a 1/4" in of stripped wire and tighten the screws.

Note: make sure there are no loose strands of wire.

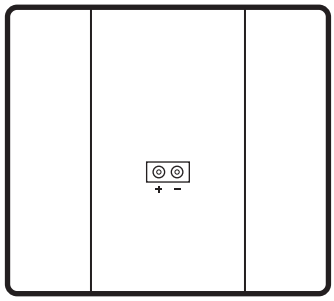

1a. Make sure the + wire is connected to the plus or red terminal on your speaker and the – to the negative or black terminal on the speaker.

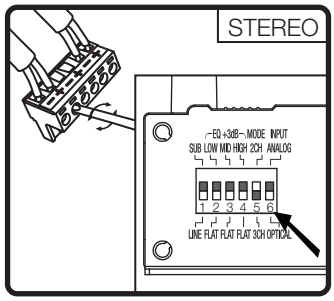

2. For 2 channels (Stereo) connect your speakers to the 2 outer sets L and R terminals. Set dip switch 5 in the up position.

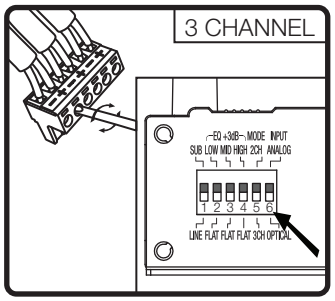

3. For 3 channels connect the speakers to the two outer sets of terminal for your left and right channels and the center set for the center channel. Set dip switch 5 in the down position.

Connecting a Subwoofer

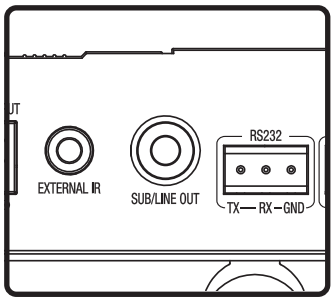

1. Connect a Subwoofer to the SB335 with an Audio RCA cable.

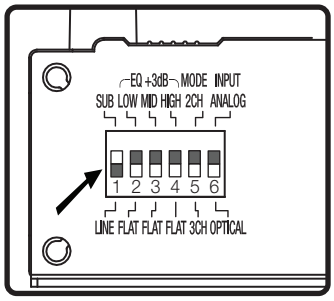

2. To use the internal SB335 crossover set to 120Hz set dip switch 1 to the up (Sub) position.

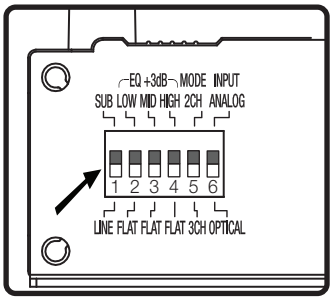

3. To use an external Sub crossover set dip switch 1 to the down (line) position.

Connecting Your Wired Audio Source

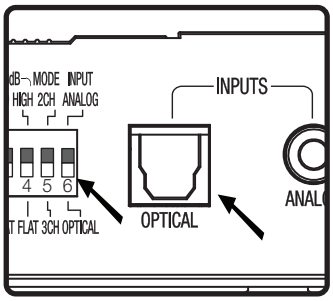

1. For digital connections connect an optical cable from your source to the optical input on the SB335. Set dip switch 6 in the down position.

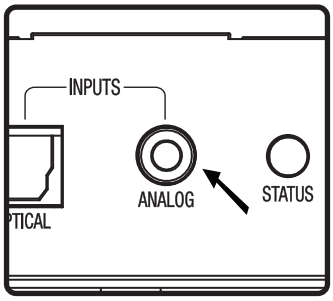

2. For analog connections connect a cable from your analog source to the analog input using a stereo 1/8”mini-jack. Set dip switch 6 in the up position.

Connecting Power to the SB335

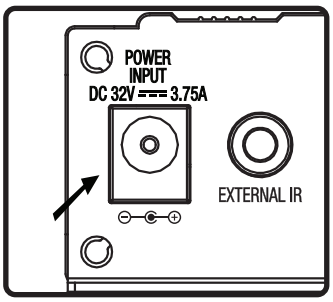

1. Connect the 32v power supply barrel connector to the power input on the SB335.

Controlling volume using a TV remote

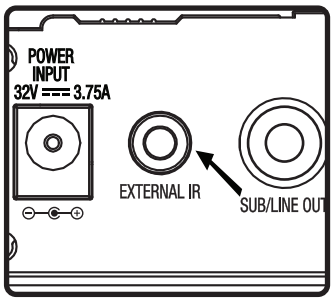

1. Connect the 1/8” mini plug from the IR receiver to the External IR port on the SB335.

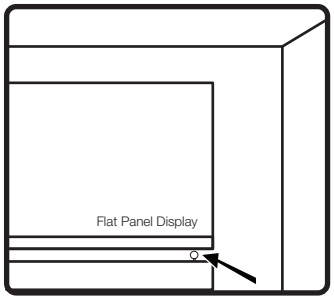

2. Position the IR receiver on a surface that faces out into the area you will be using the remote control. Fasten the IR receiver with the supplied two-sided tape disk.

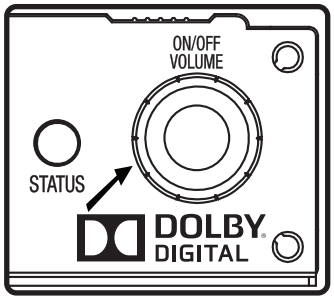

3. Turn the SB335 on by pressing the on/off button. The LED will turn white when on.

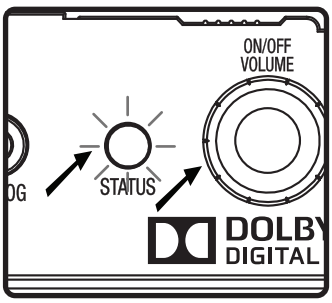

4. Press and hold the on/off button on the SB335 until it starts blinking purple (approximately 5 sec).

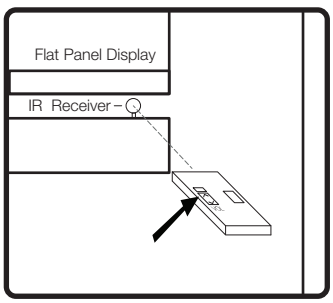

5. Point the TV remote at the IR receiver and press the volume up button 3 times. The purple LED will blink 3 times rapidly.

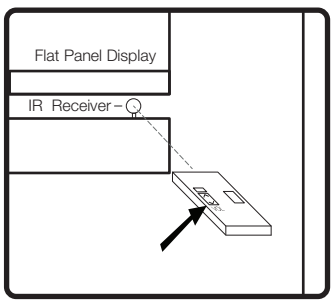

6. Repeat step 5 with the volume down button. The purple LED will blink 3 times rapidly.

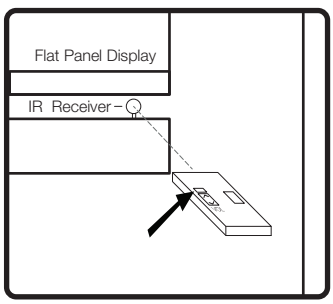

7. Repeat step 5 with the mute button. The purple LED will blink 3 times rapidly then turn solid white. The amp is now programmed and will respond to the remote control volume commands.

RS232 Control

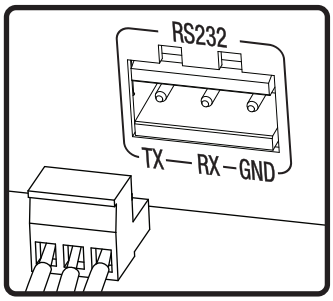

1. Connect the RS232 control device to the RS232 port on the SB335. Refer to Step 1 of “Speaker Connections” for instructions on wiring the Euro-Block connector.

Baud Rate 115200

Data Bits 8

Parity none

Stop bit 1

Flow Control none

2. All serial commands should be sent as listed above.

Ascii	Description	Ascii	Description
UV1	Volume up one step	GV	Get Volume setting
UV5	Volume up five steps	SV 0-81	Send Volume setting
DV1	Volume down one step	AON	Amp on
DV5	Volume down five steps	AOFF	Amp off
MUTE 1	Mute	Reset	Resets to factory default
MUTE 0	Unmute		

3. Ascii commands above are followed by a Carriage Return.
Note: The mute command is followed by a space then the numerical value.
The SV command is followed by a space then the numerical value of 0-81 to set the relative level.
All other alphanumeric variables have no space.
Reset sets the amp in sleep mode, volume at 40 and clears the remote codes.

Pairing with a Bluetooth device

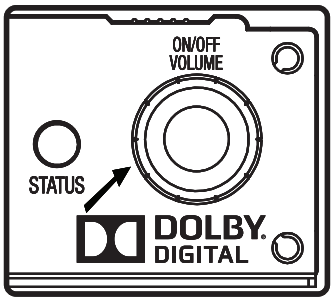

1. Turn the P3-35 on by pressing the on/off button. The LED will turn white when on.

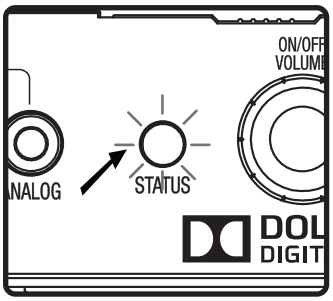

METHOD 1: If TV remote is programmed to P3-35, Bluetooth pairing mode can be initiated by pressing and holding the mute button on the remote control for 3 seconds, then release. The P3-35 LED will blink white for 1 minute or until paired.

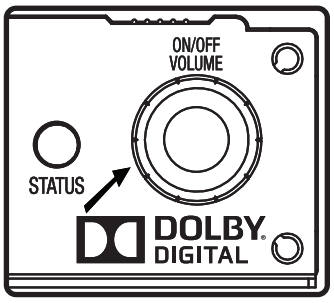

METHOD 2: Press and hold the Volume/ ON/OFF knob for 3 seconds to initiate Remote Programming Mode (flashing purple LED), then press the knob once to switch to Bluetooth Pairing Mode (flashing white LED).

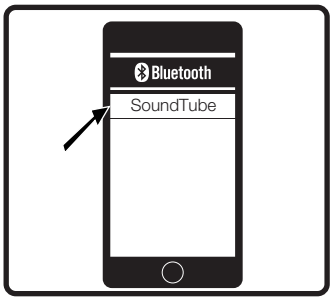

4. Open your device's Bluetooth settings and select "SoundTube".
Bluetooth (BT) will take priority over a wired audio signal when playing BT Audio. When you stop or pause BT audio the wired audio will play.

Equalizer settings

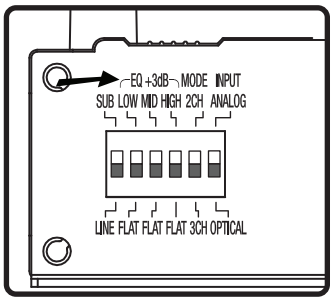

1. There are two EQ settings you can choose flat or +3dB.

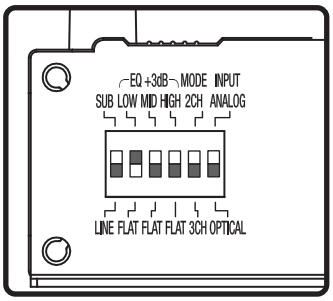

2. To boost the low frequencies set Dip switch 2 to the up position (+3dB)

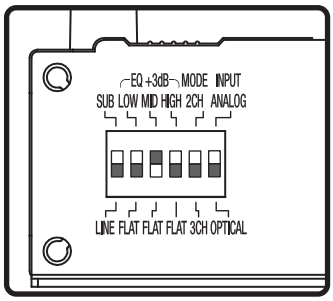

3. To boost the mid frequencies and increase intelligibility set Dip switch 3 to the up position (+3dB)

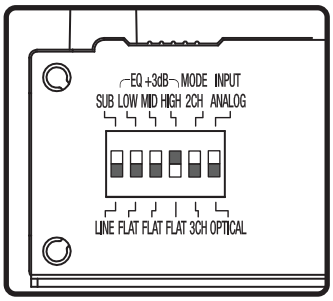

4. To boost the high frequencies set Dip switch 4 to the up position (+3dB)

Standby and sleep settings

There are two modes the SB335 can operate in; Standby and Sleep. Setting the SB335 in the standby mode disables the auto-on input signal sensing. In this mode the SB335 can only be turned on by pressing the Volume control On/Off switch or through RS232 control.

Setting the SB335 in the sleep mode enables auto-on input signal sensing and will turn the SB335 on when there is a signal present and will automatically turn off when there is no signal for 5-7 minutes.

Note: The SB335 goes into standby mode 5 minutes after it stops sensing a signal provided the amp is set to standby mode.

The SB335 will be switched into networked sleep mode in 5 minutes after it stops sensing a Bluetooth or wired audio signal provided the amp is set in sleep mode.

Setting the operating mode:

1. With the on/off switch in the off position (Red LED).
2. Press and hold the on/off switch for 10 seconds or until the LED starts blinking for 3 seconds.
3. If it blinks Blue it is in Sleep mode

If it blinks Green it is in Standby mode.

4. To change the mode repeat step 2.

LED mode guide

Standby: RED

Power on/No signal: White

Analog/PCM: Green

Dolby: Purple

Bluetooth: Blue

Bluetooth pairing: White blinking

IR learning mode: Purple blinking

Sleep: Blue blinking

Standby: Green Blinking

Note:

1. The power consumption of the product in networked standby is less than 3W.

This device complies with Part 15 of the FCC Rules / Industry Canada licence-exempt RSS standard(s). Operation is subject to the following two conditions: (1) this device may not cause harmful interference, and (2) this device must accept any interference received, including interference that may cause undesired operation.

Le présent appareil est conforme aux CNR d'Industrie Canada applicables aux appareils radio exempts de licence. L'exploitation est autorisée aux deux conditions suivantes : (1) l'appareil ne doit pas produire de brouillage, et (2) l'utilisateur de l'appareil doit accepter tout brouillage radioélectrique subi, même si le brouillage est susceptible d'en compromettre le fonctionnement.

Changes or modifications not expressly approved by the party responsible for compliance could void the user's authority to operate the equipment.

This equipment has been tested and found to comply with the limits for a Class B digital device, pursuant to part 15 of the FCC Rules. These limits are designed to provide reasonable protection against harmful interference in a residential installation. This equipment generates uses and can radiate radio frequency energy and, if not installed and used in accordance with the instructions, may cause harmful interference to radio communications. However, there is no guarantee that interference will not occur in a particular installation. If this equipment does cause harmful interference to radio or television reception, which can be determined by turning the equipment off and on, the user is encouraged to try to correct the interference by one or more of the following measures:

—Reorient or relocate the receiving antenna.

—Increase the separation between the equipment and receiver.

—Connect the equipment into an outlet on a circuit different from that to which the receiver is connected.

—Consult the dealer or an experienced radio/TV technician for help.

Under Industry Canada regulations, this radio transmitter may only operate using an antenna of a type and maximum (or lesser) gain approved for the transmitter by Industry Canada. To reduce potential radio interference to other users, the antenna type and its gain should be so chosen that the equivalent isotropically radiated power (e.i.r.p.) is not more than that necessary for successful communication.

Conformément à la réglementation d'Industrie Canada, le présent émetteur radio peut fonctionner avec une antenne d'un type et d'un gain maximal (ou inférieur) approuvé pour l'émetteur par Industrie Canada. Dans le but de réduire les risques de brouillage radioélectrique à l'intention des autres utilisateurs, il faut choisir le type d'antenne et son gain de sorte que la puissance isotrope rayonnée équivalente (p.i.r.e.) ne dépasse pas l'intensité nécessaire à l'établissement d'une communication satisfaisante.

To satisfy FCC / IC RF exposure requirements, a separation distance of 20 cm or more should be maintained between the antenna of this device and persons during device operation.
To ensure compliance, operations at closer than this distance is not recommended.

Les antennes installées doivent être situées de facon à ce que la population ne puisse y être exposée à une distance de moin de 20 cm. Installer les antennes de facon à ce que le personnel ne puisse approcher à 20 cm ou moins de la position centrale de l' antenne.
La FCC des éltats-unis stipule que cet appareil doit être en tout temps éloigné d'au moins 20 cm des personnes pendant son functionnement.

This radio transmitter (identify the device by certification number, or model number if Category II) has been approved by Industry Canada to operate with the antenna types listed below with the maximum permissible gain and required antenna impedance for each antenna type indicated. Antenna types not included in this list, having a gain greater than the maximum gain indicated for that type, are strictly prohibited for use with this device.

Gain of antenna: 2.0dBi max.
Type of antenna: Omni-directional
Impedance of antenna: 50ohm

Le présent émetteur radio (identifier le dispositif par son numéro de certification ou son numéro de modèle s'il fait partie du matériel de catégorie I) a été approuvé par Industrie Canada pour fonctionner avec les types d'antenne énumérés ci-dessous et ayant un gain admissible maximal et l'impédance requise pour chaque type d'antenne. Les types d'antenne non inclus dans cette liste, ou dont le gain est supérieur au gain maximal indiqué, sont strictement interdits pour l'exploitation de l'émetteur.

Gain d'antenne: 2.0dBi maximal
Type d'antenne: 50 ohm, Omni-directionnel