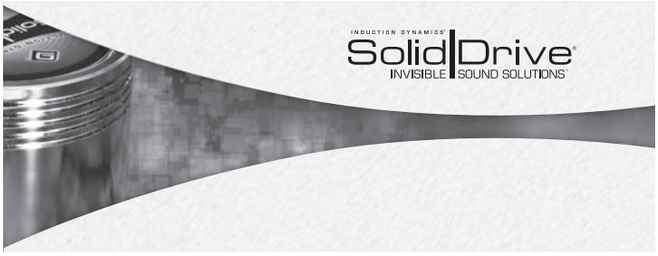

SolidDrive

INSTALLATION & USE GUIDE

for MSK-1, MSK-1-G, & MSK-1-SM
Sound Masking Transducer

SolidDrive MSK-1/MSK-1G/MSK-1SM Specifications

Type	Full Range Sound Masking
Impedance	8 Ohm
Frequency Response(Hz)	70 Hz to 15 kHz
Recommended Amplifier Power	10 - 50 Watts
Dimensions	2.28'' Diameter x 4.8'' Height Mounting Plate 3.5'' Diameter
Weight	1.2 lb / .54 kg
UL Listing	1480 & 2043 Pending

NOTE: When installed in Canada, this product must be installed in accordance with the Canadian Electrical Code, C22.1, Part1.

SolidDrive MSK-1 In-Wall and In-Ceiling Mounting Bracket Specifications

Type	Patented balanced cantilever spring bracket
Construction	Heavy duty, galvanized steel
Dimensions	12OC – 2.0'' H x 13.5'' W x 5.0'' D 16OC – 2.0'' H x 17.5'' W x 5.0'' D 24OC – 2.0'' H x 25.5'' W x 5.0'' D
Weight	1.0 lb / .45 kg

WARRANTY
SolidDrivesare guaranteed for 7 years from date of purchase. Any misuses or modifications to this equipment in any way will void the warranty.

WARNING
Read instructions prior to operating. To reduce the risk of fire or electric shock, do not expose this product to rain or moisture. Unplug prior to cleaning and clean with a damp cloth. There are no user-serviceable parts in this product, please refer all servicing to qualified personnel.

Experience Audio Perfection

Induction Dynamics extensive line of audio products makes it easy to create the ultimate audio system, regardless of installation requirements. Induction Dynamics builds these products with only the most select components and materials; and utilizes numerous unique and proven technologies.

INSTALLATION OF SOLIDDRIVE MSK-1 INTO WALLS AND CEILINGS

By utilizing these basic installation steps, you can install the SolidDrive MSK-1 into walls and ceilings for a variety of sound masking applications.

GETTING STARTED WITH SOLIDDRIVE

What's included with the SolidDrive MSK-1 for installation into walls and ceilings and what is supplied by the installer —

A SolidDrive MSK-1 consists of: One (1) SolidDrive MSK-1 unit with 2 hard wire leads and one duplex conduit connector. *Additional mounting materials may need to be ordered with the SolidDrive MSK-1 or supplied by the installer depending on the application.

For drywall: For in-wall and in-ceiling installation, you will have ordered one (1) or more SolidDrive MSK-1 and one (1) or more patented acoustic in-wall mounting brackets (one (1) bracket per MSK-1), which comes with four (4) #8-32 x 5/16'' Phillips flat head machine screws for mounting the drive to the bracket. At the time of the order, you will also have specified mounting bracket(s) in widths of 12OC, 16OC, or 24OC (ON CENTER of wall studs or ceiling joists) for proper width. *Installation also requires four (4) 1 3/8'' drywall screws and one (1) container of 3M® Super 77 Spray Adhesive (supplied by the installer).

EXISTING DRYWALL INSTALLATION NOTE:

For retrofitting the SolidDrive MSK-1 into existing drywall installations, it will be necessary to remove a portion of the existing drywall before installation and to replace the drywall after the SolidDrive MSK-1 is installed. Please refer to the instructions marked with **EXISTING DRYWALL** for the steps necessary for the type of installation. If installing the SolidDrive MSK-1 in new construction, IGNORE the **EXISTING DRYWALL** steps.

STEP 1
INSTALLATION INTO EXISTING DRYWALL

For installing the SolidDrive MSK-1 mounting bracket into existing drywall, first cut a rectangular opening in the drywall. The minimum recommended opening size is approximately fifteen inches tall and beyond the width of the adjacent wall studs. This will help in attaching the mounting bracket, feathering the drywall back in, and getting the drywall to meet at the seams (Figure 1). This will allow proper distribution of sound and the SolidDrive MSK-1 will function with optimum performance.

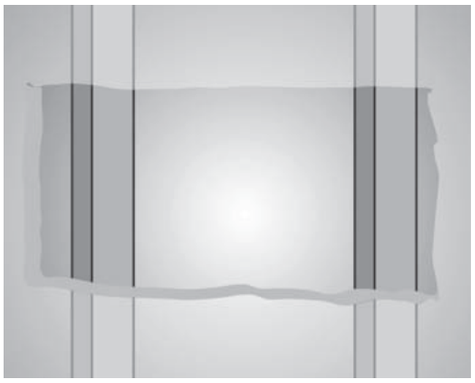

Figure 1
Cut an opening large enough to install the mounting bracket to the wall studs

218-2127 REV-06.22.17

STEP 2
Attach the SolidDrive mounting bracket to wall studs or ceiling joists

Place the mounting bracket between the wall studs or ceiling joists and secure with four 1 3/8" drywall screws. Insert the screws through the four pre-drilled holes in each flange and screw them into the face of each wall stud or ceiling joist (Figure 2). The drywall screws need to be driven flush with the surface of the flange so that the drywall sets flush on the bracket flange.

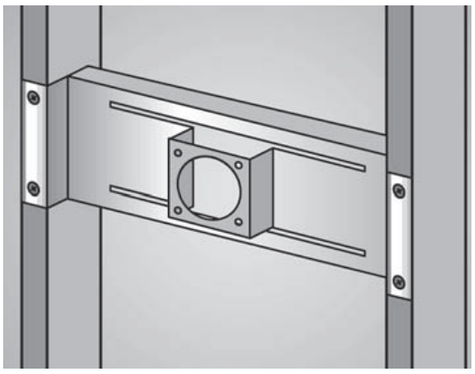

Figure 2
SolidDrive MSK-1 mounting bracket attached to the wall studs

STEP 3
Insert the SolidDrive into the bracket

Feed the SolidDrive MSK-1 cable through the round opening in the face of the mounting bracket. Insert the SolidDrive MSK-1 through the same opening with the oversized mounting base facing outward toward the side that the drywall will be installed and flush against the bracket face. Align the pre-drilled holes in the mounting base to the threaded holes in the bracket face (Figure 3). Attach the SolidDrive MSK-1 securely to the mounting bracket using the 4 Phillips flat head machine screws.

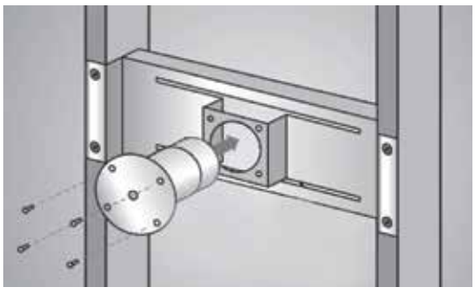

Figure 3
SolidDrive MSK-1 being installed into the mounting bracket

STEP 4
Make the electrical connections

Make the electrical connection between the SolidDrive MSK-1 and the speaker cable using the included Eurostyle connector. Be sure to observe proper polarity when connecting the SolidDrive MSK-1. ***NOTE: When installed in Canada, this product must be installed in accordance with the Canadian Electrical Code, C22.1, Part1.***

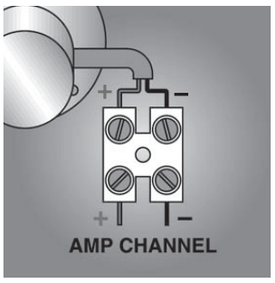

Figure 4

STEP 5
Apply adhesive to the drywall surface and base of the SolidDrive

If possible, position the drywall panel so that the SolidDrive MSK-1 is at the center of the panel or as far from the edge of the panel as possible. This will allow proper distribution of sound and the SolidDrive MSK-1 will function with optimum performance. Prior to mounting, take measurements of the new drywall panel to determine the exact area that will come in contact with the base of the SolidDrive MSK-1 and spray that area liberally with the 3M® Super 77 contact spray adhesive. Also, liberally spray the surface of the oversized mounting base of the SolidDrive MSK-1 (masking around the base is highly recommended to prevent overspray). ***NOTE: Failure to apply the adhesive to both the drywall surface and oversized mounting base will prevent the system from functioning properly.***

STEP 6
EXISTING DRYWALL
Re-install rectangular cutout in wall

For re-installing the rectangle drywall panel that was cut out to install the SolidDrive MSK-1, it is important to create a uniform seal between the cut drywall and the existing drywall. This will allow proper distribution of sound and the SolidDrive MSK-1 will function with optimum performance. Apply fast setting joint compound, not vinyl based, in the space between the cutout section and the existing drywall panel. Make sure to fill the space completely with drywall compound then proceed with the normal taping, sanding and finishing routine.

STEP 7
Install the new drywall

Immediately install the new drywall before the spray adhesive sets up (approximately 10 minutes). This allows adjustment of the panel before the final location is determined. The drywall panel is to be fitted to the wall studs or ceiling joists and screwed into position. Apply joint compound in the space between the drywall panels and proceed with the normal taping, sanding and finishing routine. The joint compound filled between the panels will improve the distribution of sound as well as overall sound quality.

INSTALLATION OF SOLIDDRIVE MSK-1sm TO WOOD SURFACES

By utilizing these basic installation steps, you can install the SolidDrive MSK-1sm on wood, laminate, composites, and other porous surfaces. The MSK-1sm is commonly used on desks, conference tables, cabinetry, and other furniture.

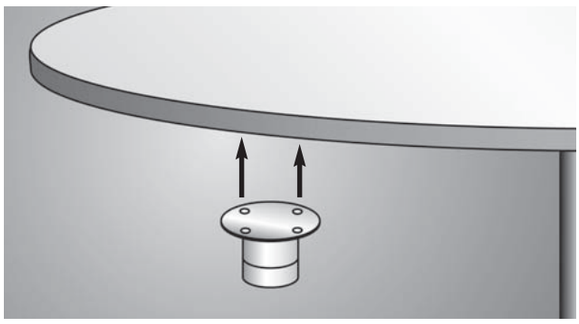

Figure 1
Mounting the SolidDrive MSK-1sm to a table.

Once you have determined where to mount the SolidDrive MSK-1sm, spray a thin layer of 3M® Super 77 adhesive on the bottom of the SolidDrive, then use the appropriate length wood screws to attach it securely to the surface. The adhesive improves the sonic transmission between the drive and the surface. The best mounting location is typically out of sight on the underside or back of desks, counter tops, conference tables, or other office/home furniture. The four pre-drilled mounting holes on the SolidDrive MSK-1sm oversized mounting base will hold screws as large as #9. Refer to Step 4 for electrical connections.

Some installations may require that pilot holes be drilled into the surface material due to its hardness, especially if larger, coarse thread screws are used.

INSTALLATION OF SOLIDDRIVE MSK-1g TO GLASS SURFACES

For installation on glass surfaces, the SolidDrive MSK-1g comes with a VHB double-sided adhesive disc.

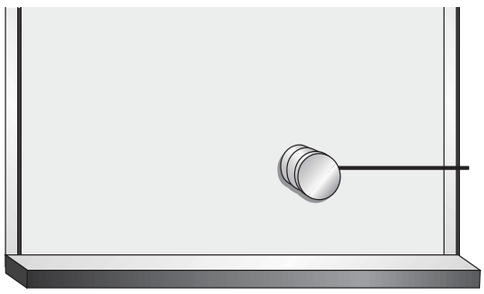

Figure 1
Mounting the SolidDrive MSK-1g to glass.

The SolidDrive MSK-1g should be mounted in an inconspicuous location of the window. Simply apply the VHB pad that comes with the drive to the base of the drive (the side opposite the label). Remove one side of the protective layers from the VHB disc and apply to the base of the MSK-1g. Then remove the other protective layer and apply to glass surface with moderate pressure. Refer to Step 4 for electrical connections.

When mounting the SolidDrive on the window, keep it about 4 to 6 inches from the window frame. The SolidDrive MSK-1g will have maximum output with at least 20 square feet of window surface space.