SPECIALISTS IN PRACTICAL PRECISION ENGINEERING™

RACK-UP® SERIES

Model RU-ASX4DR

Remote Controlled Stereo Audio Selector with VCA 4x1

- Remote Controlled Switching and Level Control
- Multiple Switching Control Points
- 4 Stereo Inputs to 1 Stereo Output
- Line-Level Audio Switching
- External Level Control Using 10 kΩ Potentiometer
- External Level Control Using 0 to 10 Vdc
- 96 dB Attenuation Range in 0.5 dB Steps
- Noiseless Zero-Crossing Adjustment Steps
- Precise Level Tracking on Each Channel
- Balanced or Unbalanced Inputs and Output
- Gain Trim on Each Source
- Open-Collector Output for Selected Input
- Controllable Using Various RDL Remote Controls

The RU-ASX4DR is part of the group of RACK-UP products from Radio Design Labs. RACK-UPs feature the advanced circuitry for which RDL products are known, combined with accessible user-friendly controls and displays. The ultra compact design permits high-density installations, with *three* products mounted in a single rack unit! Optional brackets permit mounting a RACK-UP module above, below, or in front of any flat surface!

APPLICATION: The RU-ASX4DR is a four channel stereo audio selector with input gain adjustments and output level metering. The module is equipped with an internal stereo VCA for setting the output level. Source selection and level adjustment are by remote control. Each module may be remote controlled from single or multiple locations. Rear-panel terminals provide flexible control options using a variety of RDL remote controls or OEM equipment. The inputs and output are connected on rear-panel detachable terminal blocks.

Each of the four stereo line level inputs accepts either a balanced or an unbalanced signal. Each input is equipped with a rear panel screwdriver-adjustable input gain trimmer. Input signal levels between -15 dBV and +8 dBu may be set to the proper operating level as indicated by a stereo dual-LED VU meter. This assures ample headroom at all normal operating levels. The module is equipped with two identical sets of stereo dual-led VU meters, one on the front panel, the other on the rear panel. The maximum input level is +25 dBu.

The RU-ASX4DR was designed for silent switching of audio signals using only solid-state switching circuitry. Each of the VU-meters, left and right, is calibrated to read +4 dBu feeding the corresponding balanced output.

The audio output level is controlled by a remote 10 kΩ linear taper pot or by 0 to 10 Vdc. A single remote control location is possible using a remote 10 kΩ potentiometer. The RU-ASX4DR is compatible with RDL D SERIES-RLC10 rotary remote controls that provide user adjustment at single or multiple locations. Audio levels are controlled in 0.5 dB steps using noiseless zero-crossing digital attenuators for optimum reliability, precise tracking and long-term click-free service. The output is stereo line level. Each output channel may be connected balanced or unbalanced.

Inputs are selected by a sequential remote control such as an RDL D-RCS4, by a momentary remote control such as an RDL D-RC4M or by an external open-collector momentary closure to ground. The RU-ASX4DR may be remote controlled from a single or from multiple locations. When a source is selected, the RU-ASX4DR provides a 25 mA open-collector output to control other equipment or modules. A front-panel LED indicates the selected source. Only one source may be selected at a time. If the momentary input terminal for a selected source is triggered again, all inputs are turned off.

Rear-panel DIP switches are provided to set the VCA activity LEDs for momentary or continuous display, to select the remote control mode (sequential or individual source selection), and upon power-up a return to either a pre-programmed source or to the last source used. The pre-programmed source is stored when the module is installed and can be re-programmed at any time.

The RU-ASX4DR offers exceptional headroom, very low distortion, excellent crosstalk isolation, wide flat frequency response and extremely low noise with very high common-mode signal rejection. It provides exceptional audio performance for the most critical applications in a professional audio environment.

The RU-ASX4DR operates from 24 Vdc connected through a rear-panel detachable terminal block.

RDL®
Radio Design Labs
SPECIALISTS IN PRACTICAL PRECISION ENGINEERING™

RACK-UP® SERIES
Model RU-ASX4DR
Remote Controlled Stereo Audio Selector with VCA 4x1

Installation/Operation

EN55103-1 E1-E5; EN55103-2 E1-E4
Typical Performance reflects product at publication time exclusive of EMC data, if any, supplied with product. Specifications are subject to change without notice.

STEP 1: Determine the type of remote control to be used for source selection. Momentary controls use four open-collector transistors or switches (these may be relay contacts, pushbuttons or RDL remote controls) to momentarily connect one input control terminal to ground; one input terminal corresponds to each of the four audio inputs. Sequencing controls use a single input terminal (SEL terminal); a momentary HI (+15 to +24 Vdc) pulse applied to this terminal advances the module to the next audio source; an RDL D Series-RCS4 is typically used. Set the MODE 1 switch to the appropriate remote control type.
STEP 2: Determine if the module should power up to the "last source used" (before power to the unit was turned off), or if the module should always power up to a pre-defined source. Set the MODE 2 switch for the desired power-up source operation.
STEP 3: Determine if the VCA activity display should continuously display the last direction change, or if it should only display activity during adjustment. Set the MODE 3 switch for the desired display.
STEP 4: Determine if any remote devices are to be switched by the module when a source is selected. Connect the remote devices to the SLAVE (open-collector) output terminals on the module. The RU-ASX4DR and the remote devices must share a common ground connection.
STEP 5: Connect the remote controls to the appropriate control terminals, one for the source selection and one for the VCA control (if used).
STEP 6: Connect audio to each input that is to be used. With the audio sources active, select each source and adjust the audio level on the rear-panel trimmer, as indicated on the dual-LED VU meters on the rear of the unit.

SETTINGS AND AUDIO WIRING

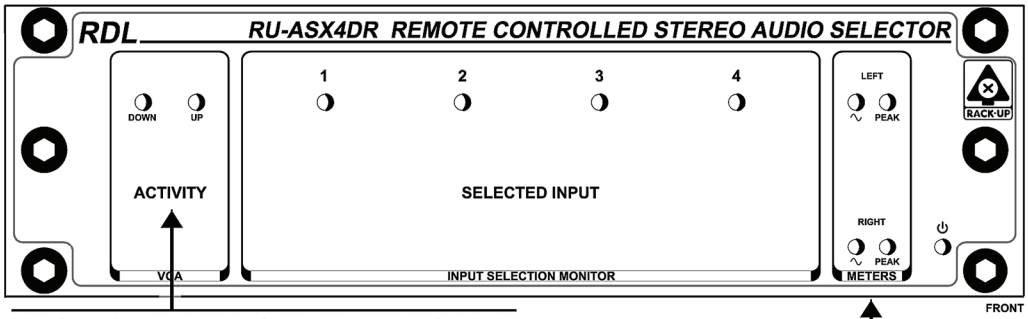

The **ACTIVITY** LEDs display the VCA activity. The action of the LEDs can be set for momentary or continuous display by setting **MODE** switch **3** to either **ON** (continuous) or **OFF** (momentary).

Front Stereo Dual-LED VU meters

Set **MODE** switch for desired operation. The MODE Switches are Read During Power Up.
MODE Switch **1** RMT CTRL: ON=Read Stepped Remote Control (SEL) Input During Operation
MODE Switch **1** RMT CTRL: OFF=Read Momentary Remote Control Inputs (1 thru 4) During Operation
MODE Switch **2** SOURCE: ON=Initialize Source Selection to the Last Source Used
MODE Switch **2** SOURCE: OFF=Initialize Source Selection to a Stored Default (Set by PGM button)
MODE Switch **3** VCA ACTIVITY: ON=Front-Panel **ACTIVITY** LEDs Set to Continuous Display (Retains last level change direction)
MODE Switch **3** VCA ACTIVITY: OFF=Front-Panel **ACTIVITY** LEDs Set to Momentary Display (Flashes only during level adjustment)

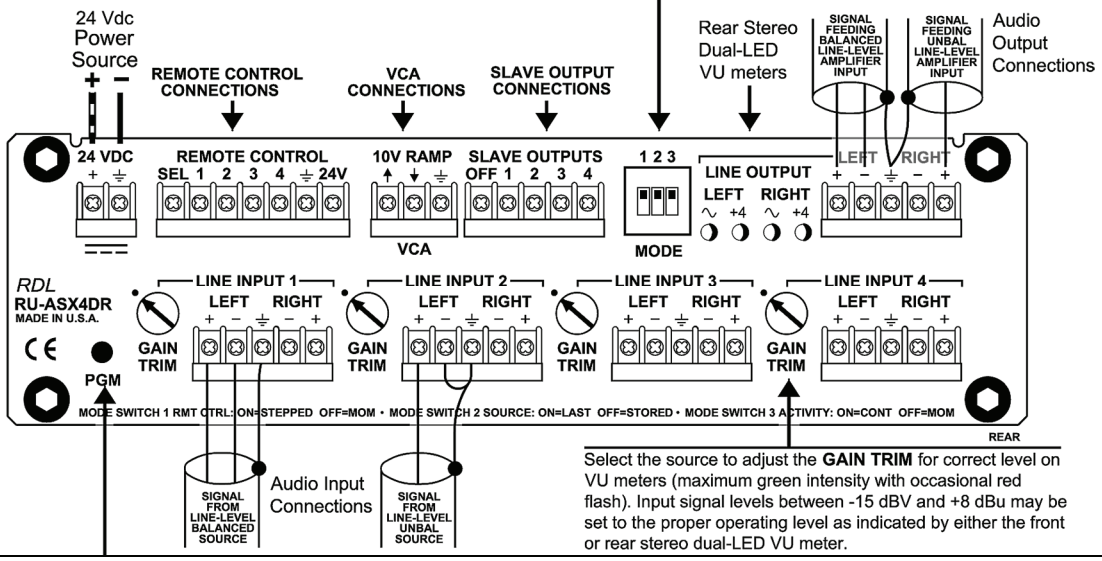

Select the source to adjust the **GAIN TRIM** for correct level on VU meters (maximum green intensity with occasional red flash). Input signal levels between -15 dBV and +8 dBu may be set to the proper operating level as indicated by either the front or rear stereo dual-LED VU meter.

The **PGM** pushbutton is used to store which input will be active on power-up if **MODE** switch **2** is set to the **OFF** position. Press and hold the **PGM** button during power up to enter the programming mode. Release the **PGM** button when the front-panel input select LEDs flash twice (to indicate that the unit is in programming mode). The LEDs will display the stored input source. NOTE: If all four LEDs are off, then no source is selected (unit powers-up with all sources off). Press the **PGM** button to advance to the next source as indicated by the front panel LEDs. When the desired input is selected no further action is required. After three seconds the unit stores the indicated source and flashes all four source selection LEDs twice to indicate programming is complete.

RU-ASX4DR

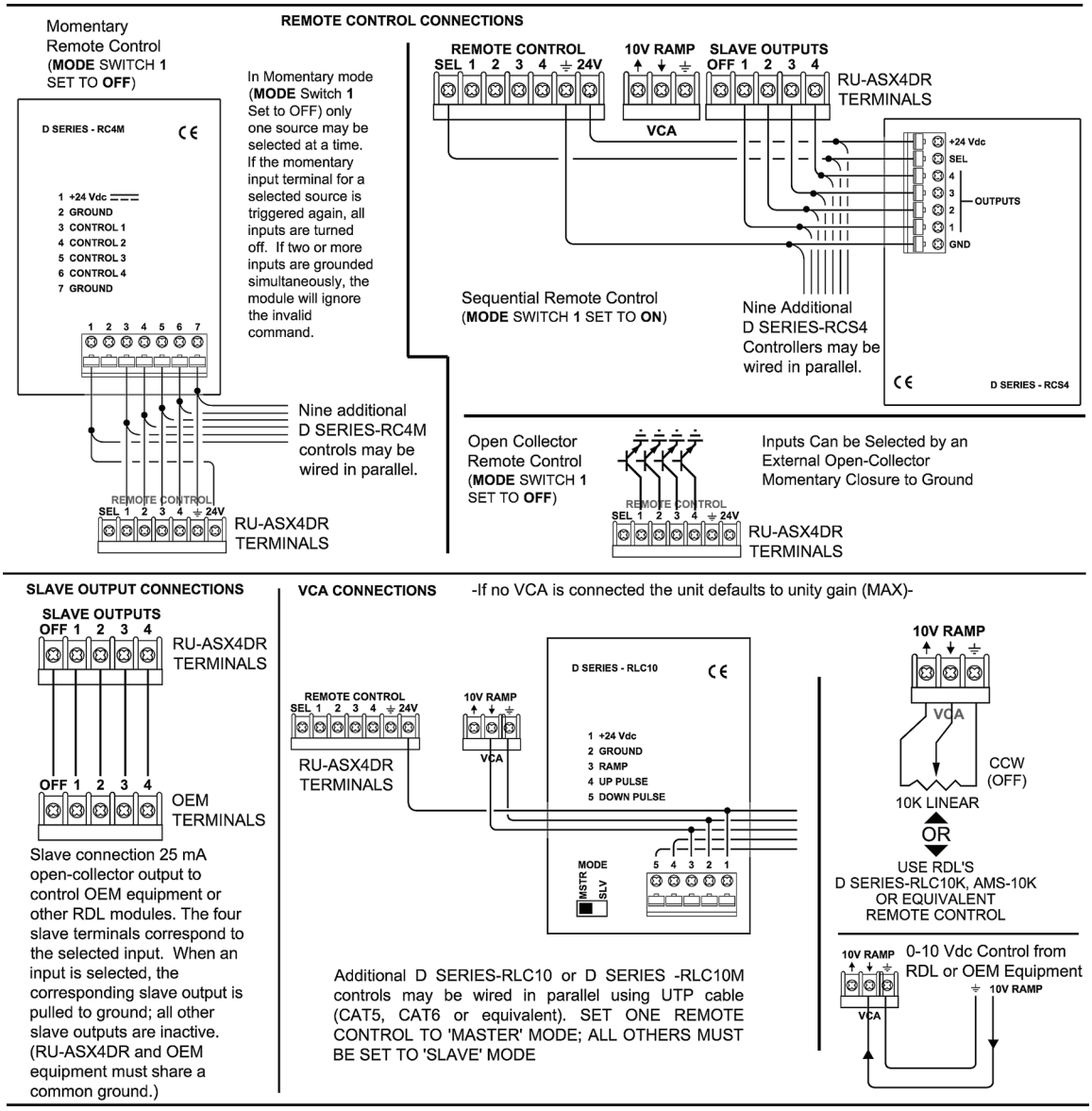

TYPICAL PERFORMANCE

Audio Inputs (4):	Stereo, Line level on Detachable Terminal Block
Input Impedance:	> 20 kΩ balanced, > 10 kΩ unbalanced
Input Level (for +4 dBu output):	-15 dBV to +8 dBu, adjustable on rear-panel trimmers
Maximum Input Level:	+25 dBu
Common Mode Rejection:	> 60 dB (50 Hz to 120 Hz)
Headroom (above +4 dBu):	> 18 dB (unity gain)
Frequency Response:	10 Hz to 20 kHz (±0.2 dB)
Distortion (THD + N):	< 0.01% (20 Hz to 20 kHz)
Noise (below +4 dBu):	< -85 dB (with any input selected); < -95 dB (with no input selected)
Off Attenuation:	> 85 dB (1 kHz), > 70 dB (20 kHz)
Crosstalk:	< -80 dB (1 kHz); < -60 dB (20 kHz)
Front-Panel Indicators (11):	Power, Selected channel (4), VCA activity up/down (2), L and R Dual-LED VU meters (4)
Audio Output:	Stereo, Line level on Detachable Terminal Block
Output Impedance:	150 Ω balanced, 75 Ω unbalanced
Output Level:	+4 dBu balanced, unbalanced output 6 dB below balanced output level
Control inputs (6):	1 mA, pulled to ground (4, source selection); 1 mA, pulled to +15 Vdc (SEL); 0 to 10 Vdc (VCA)
Control outputs (5):	25 mA, open-collector to ground
VCA Control Input:	0 to 10 Vdc; or 0 to 10 kΩ linear potentiometer
Rear-Panel Indicators (4):	L and R Dual-LED VU meters
RDL Remote Control Compatibility:	D-RC4M, D-RCS4 (source selection); D-RLC10, D-RLC10M, D-RLC10K, D-RLC10KM, D-RLC3 (VCA)
Power Connection:	Detachable Terminal Block
Power Requirement:	24 Vdc @ 175 mA, Ground-referenced
Ambient Operating Environment:	0° C to 55° C

Radio Design Labs Technical Support Centers
U.S.A. (800) 933-1780, (928) 778-3554; Fax: (928) 778-3506
Europe [NH Amsterdam] (++31) 20-6238 983; Fax: (++31) 20-6225-287