Cambridge
Qt® X Sound Masking System
Installation & Operation Guide

Connecting people through extraordinary audiovisual experiences™

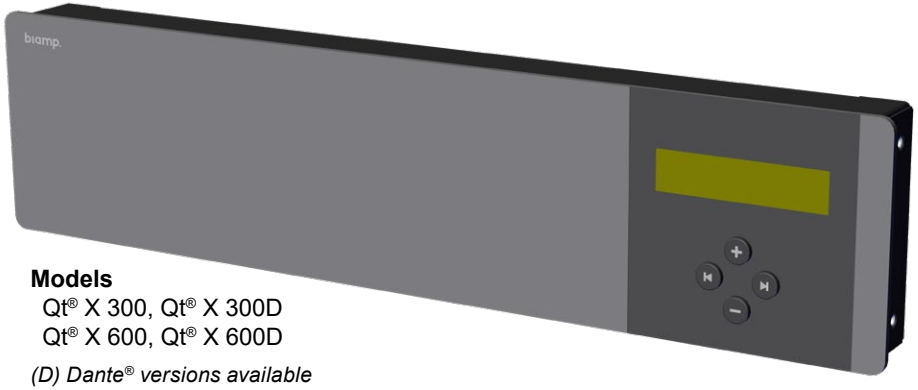

Models
Qt® X 300, Qt® X 300D
Qt® X 600, Qt® X 600D

(D) Dante® versions available in a future release

FEATURES

- 3 or 6 outputs of sound masking coverage depending upon the model
- Wall, rack mount and plenum options
- Web-based control interface
- Compatible with active and passive Qt®Pro emitters
- Qt X is easily interfaced with a building's life-safety system out of the box
- "D" models (Qt X 300D/600D) will support distribution of Dante®, AES67, and AVB (enabled in future firmware release)

PRODUCT DESCRIPTION

Biamp's Cambridge Qt® X Series is a complete, all-in-one sound masking solution that delivers the flexibility, reliability, and ease of installation that integrators desire. It is engineered to incorporate direct-field technologies, making the Qt X ideally suited for office environments. Qt X is easily interfaced with a building's life-safety system out of the box, ensuring proper coordination during emergencies.

All models of the Qt X control modules include a sound masking generator, controller, third octave band equalizer and amplifier with two analog audio inputs. This allows for distribution of audio from paging controllers and/or (background) music players, one digital media input (RJ45 Ethernet port), and 3 or 6 analog output channels (depending on the Qt X model) to connect to sound masking emitters or speakers.

Qt X 300 and **Qt X 600:** Use direct field devices (Qt Standard or Active Emitters). The emitters point downward above the listener's head for direct, unimpeded audio signal. The Qt X 300 control module is a compact three-output controller suitable for installations of up to 36,000 square feet (3,345 m²). The Qt X 600 control module is identical in features and functions yet supports six outputs of sound masking and audio installations of up to 72,000 square feet (6,689 m²). Outputs can be assigned to a zone and then the zones are adjusted for masking and audio levels and spectra. Qt X 300/600 models have "preset" optimized sound masking spectra for use with Qt Emitters. Additional configuration is available from a web-based control interface or from a remote desktop leveraging the unit's network connectivity with the Qt X software.

The "D" models of each controller (Qt X 300D/600D) will be available in a future release. They support Dante® audio stream inputs and are AES67 compatible.

The Qt X web-based management software provides an intuitive interface for setup and programming of a Qt X sound masking system. For information related to this software interface, see Qt X Web help.

Unless otherwise noted, all installation, set up and use instructions apply to the Qt X family of control modules (Qt X 300 and Qt X 600).

CONTENTS

This manual is divided into sections with installation instructions for each control module and basics regarding the sound masking devices connected to each.

Product Description 1
Features 1
Contents 2
Important Safety Information 2
Before You Start 2
System Installation Checklist 3
Qt X 300 & Qt X 600 5
Wiring & Connections 7
Emitter Installation (Qt X 300/600 models) 13
Interacting with a Qt X system 19
Commission the System (next steps) 22
Commission the System (continued) 23
Accessories 24
Qt X System Information Worksheet 29

IMPORTANT SAFETY INFORMATION

Install the controller away from heat sources, such as vents, radiators, and heat registers. Avoid installing near water. Do not exceed the maximum ambient operating temperature of 40-90° F (4-32° C).

If the Qt X controller is installed in a rack, the following must be observed:

- Care must be taken to ensure temperature and air flow is sufficient to allow the unit to operate safely and not exceed the maximum operating temperature stated above. The controllers must be mounted to the rack in a safe and stable manner to prevent any potential for tipping or structural failure.
- Electrical connections to the equipment must be sufficient to prevent any circuit overloading and reliable grounding of the supply circuits shall be maintained.

The controllers are UL 2043 approved for installation into a plenum space.

DANGER: The AC/DC power supply provided with this product has not been evaluated to UL 2043 and must not be installed in a plenum space. (International [multiple language] versions of this statement are <here>)

BEFORE YOU START

It is very important to understand the basics of sound masking before installing a system. Sound masking is the addition of a specifically tailored (frequency) signal which is added to a listener's environment to increase speech privacy. In open offices, the addition of sound masking decreases the distance where unwanted conversations can be clearly understood, thus reducing the distraction of those distant conversations. This is accomplished by reducing the talker's signal-to-noise ratio as experienced by the listener. (i.e. covering the talker's speech with a masking signal at the listener's location).

Sound masking signals (produced by emitters and loudspeakers) are placed where potential unwanted listeners are present. Placing masking only near a talker has no effect. In the case of enclosed spaces, it is typical to place sound masking both inside and outside an enclosed space to maintain speech privacy. Sound masking signals placed outside of the enclosed space prohibit in-room conversations from being overheard by people passing near the space. Placing sound masking inside a room helps to promote speech privacy by "protecting" conversations taking place in adjoining spaces (such as private offices).

There are several items that you need to know and have in place prior to installing a Qt X sound masking system:

- Network connectivity - Make Cat 6 cabling runs to all controller locations - 1-2 per controller. (2nd cable would be for future networking capability)
- For installation of Qt X 300/600 systems, an understanding of how runs to the standard and active emitters are laid out to prevent signal interference - see explanations in the emitter wiring and layout section (pgs 13-18)
- Familiarity with basic network installation best practices
- You should have the design plan / layout from the Biamp Design Team noting device, output and zone locations. This will allow you to plan the cabling runs and controller locations.
  Reach the Design Team here: https://cambridgesound.com/quote/

SYSTEM INSTALLATION CHECKLIST

Suggested order of operations for installation & commissioning a typical sound masking system.

- ❑ Mount, Install and Cable all components
- ❑ Power & test emitters
  - ❑ Define emitter type per output *(must be connected to the controller via* Qt X *web interface)*
  - ❑ Adjust Zone on front panel to a low but audible level as necessary
  - ❑ Walk emitter locations to verify sound masking signal is present at each
- ❑ Attach peripherals (paging, audio sources, life safety panel…)
  - ❑ Verify proper operation of each source and contact closures
- ❑ Configure the system
  - ❑ Configure controller's IP Address [Network Operation Mode (single / dual network cable)]*
  - ❑ Update firmware for each controller
  - ❑ Create zones as required
  - ❑ Assign controller outputs to zones
  - ❑ Create music paging Audio Sources and assign to Zones (ensure emitter type in use supports audio sources)
  - ❑ Define behaviors of input and outputs
  - ❑ Set zone sound masking levels (42dBA SPL to 48dBA SPL) using a calibrated sound pressure meter. Measure at 4ft. (1.2m) above the finished floor.
  - ❑ Adjust masking spectrum equalizer for each output as necessary to meet project requirements. Qt X 300/600 models have preconfigured spectrums,
  - ❑ Set system security / user levels and document passwords
- ❑ Go through each zone testing / adjusting levels, checking behavior
  - ❑ Set Audio Source levels
  - ❑ Capture final sound masking spectrum and sound pressure level measurements for reporting if required
- ❑ Set soft start, schedules, etc., as necessary
- ❑ Save system configuration using the "Download Configuration" button in the System Info tab (System Settings)

** Items in brackets with an asterisk '*' will be included in future firmware releases*

Installation Considerations

Qt X 300/600 systems

- Output runs must have the same device type (Standard or Active Emitters) and will share the same sound masking settings. The cabling runs must be configured to prevent any signal interference among the 4 channels along the layout. (Refer to illustrations pages 16-17).
- Differences in ceiling height of more than 6" (152mm) need to be connected as separate outputs because sound masking levels will be different.
- Each output's sound masking levels can be individually controlled and then assigned to networked zones with additional controls applied to the whole zone.

Cable	Cabling Type	Qt Passive emitter (Max Distance from Qt X)	Qt Active Emitter (Max Distance from Qt X)
Signal Cable	Cat 3, 5, 5e, 6 - 4-pair (8-conductor) 24 AWG Solid CMP (EIA/TIA 568B standard termination)	1000 ft (304.8 m) from Controller to last emitter	**1000 ft (304.8 m) from Controller to last emitter of the longest pathway (including the powered signal cable length)
Powered Signal Cable	Cat 3, 5, 5e, 6 - 4-pair (8-conductor) 24 AWG Solid CMP (EIA/TIA 568B standard termination)	—	400 ft (121.9 m) from Injector Output to last Active Emitter
Power Cable	14 AWG, 2-conductor Stranded CMP	—	400 ft (121.9 m) from Power Supply to Injector Input
Maximum Number of Standard or Active Emitters (Qt X 300/600)	—	Qty 60 per Output run (A or B) Qty 120 per Output total (A+B)	Qty 25 per Injector Output Qty 50 per Injector Qty 100 per paired (A/B) outputs - requires 2 Injectors

** Signal Length = 1000 ft (304.8m) Longest "Powered Signal" length

Figure 1. Qt X 300 or Qt X 600 Front Panel

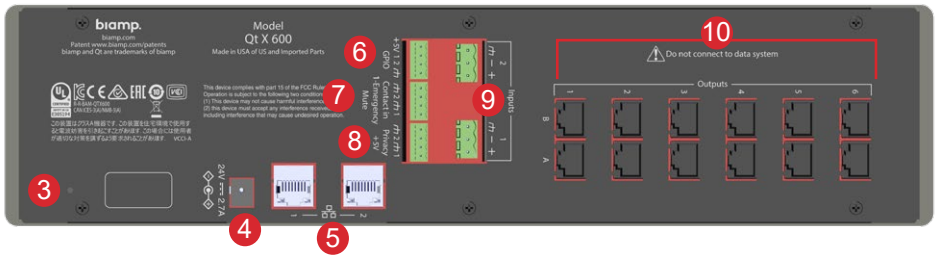

Figure 2. Qt X 300 or Qt X 600 Rear Panel

(Qt X 600 panel shown)

1. LCD Display
The LCD display indicates system statuses and parameters. Users may navigate through the display to view the current IP address and network mask of the device, view current operating mode of the device (unconfigured, configured, updating firmware, etc.) and view any faults present.

2. Function/Navigation Buttons
Function/navigation buttons allow navigating through information provided in the LCD display.

3. Factory Reset
Insert pin to depress the switch, press and hold for 10 seconds. This will return the unit to factory settings, cause all configuration to be cleared and the device to reboot.

WARNING: Doing this will take the device back to its unconfigured state and delete any associated input / output device settings from local memory.

4. Power Connector
Connection for an external (included) 24V 90W power supply.

IMPORTANT: Always plug / unplug the power supply at the wall outlet.

5. Network Control / Media Ports - 2 ports*
RJ45 Gigabit Ethernet port connectors that support AVB and Dante media streams (Dante and AES67 supported on the 300D/600D models only). In dual cable mode the left one (#1) the default media port, but in single cable mode it can be both control and media. The right (#2) port is the default control port in dual cable mode. Port 2 is disabled in single cable mode.

4-Pin Logic I/O - 2 ports

Two triggers for zone muting or indication for paging application.

6. 4-Pin Contact Closure - 2 inputs
This contact closure is provided in order to mute audio or sound masking in the zone or system in the event of a fire emergency or request to page. These inputs should be connected to the fire alarm panel (port 1) or paging system (port 2 - configured as Push-to-Talk).

7. 4-Pin Privacy Light Output - 2 outputs
The privacy lights ports enable connections to (2) privacy lights panels which indicate when sound masking is enabled in a certain zone. Each can be assigned to a different zone when configuring the system in the web interface.

8. 3-Pin MIC/Line Audio Inputs - 2 inputs
Two MIC/line audio inputs may be connected to an external audio source such as a music player or an external paging controller. This allows distribution of networked audio throughout the configured zones.

9. Outputs
The Qt X 300 supports three outputs of sound masking and audio while the Qt X 600 has six outputs. Emitter connections are made via CAT5e cable from the output RJ45 connectors (6 and 12 RJ45 connectors respectively). Each output can accommodate two cable runs (A&B) that can carry up to half of the emitter total for the output. Both A&B runs on a single output must share the same type of emitter (either Standard or Active). Both runs on an output are matched in all settings and are detailed on pages 16-18.

** Items with an asterisk '*' will be included in future firmware releases*

Installation

The Qt X 300 and Qt X 600 may be installed on a wall with the included hardware. An optional Rack Mount accessory kit is available to install the unit in a rack (Instructions can be found on pages 25-26).

NOTE: It is up to the installer to determine the safest, most secure means of installing the Qt X on to a wall or other vertical surface. Consult any local building/safety codes as required.

NOTE: Equipment installation should be planned such that audio and network sources are in place prior to Qt X and emitter installation. Emitters should be tested upon installation with sound masking audio active to ensure proper functionality.

Wall-mount installations:

1. Place the wall mount where it is to be mounted and mark the hole locations. The control module hinges forward for wall mounting and cable installation. To hinge forward, loosen the screws on both sides, lift it up to disengage the top screws, and rotate forward as shown (Figure 3).

   IMPORTANT: If using the wall mount bracket as a template to drill into the wall, remove the bracket from the Qt X prior to drilling to avoid getting debris in the Qt X connectors and ports.

2. If installing into drywall/sheet rock, drill the mounting holes with a 1/4" drill bit, and insert plastic mounting anchors into the drywall/sheet rock.

3. Install the screws into the plastic anchors leaving enough room for the bracket to be hung on the screw heads. Place the bracket so the screw heads fit into the keyholes and then move the bracket down to capture the screws. Tighten the screws to secure the bracket to the wall.

   NOTE: If the Qt X was removed from the wall bracket, reinstall the screws that secure it to the wall bracket. The controller can be rotated down to make it easier to tighten the mounting screws.

4. Connect all wiring/cabling as described in Wiring & Connections. Rotate the Qt X up and move down into the operating position to lock into place. Tighten the side screws to secure it to the bracket. See Figure 4.

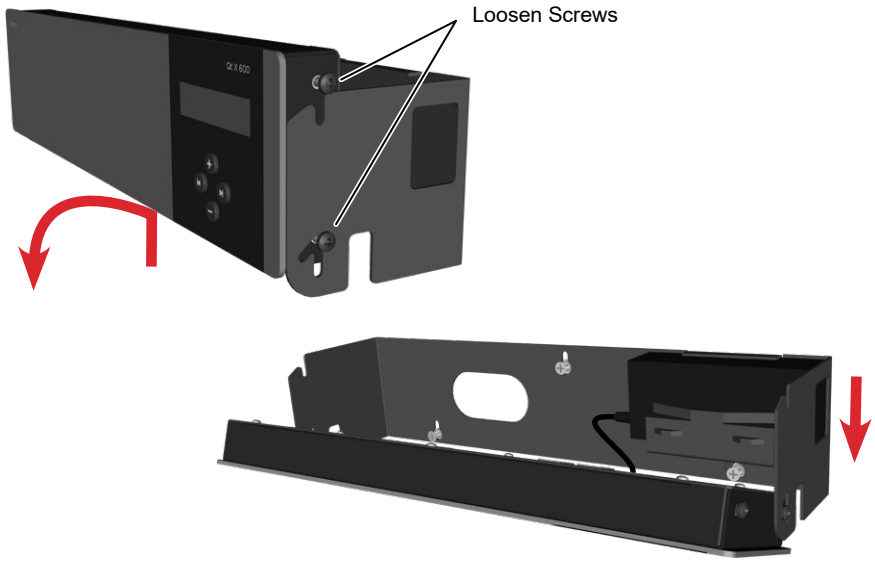

Figure 3. Mount unit / wall bracket

Figure 4. Controller in operating position

WIRING & CONNECTIONS

Wiring / Cabling

Qt X **300/600:** Cabling for Active and Passive emitters is included in designated lengths (16, 22 or 30 feet) dependent upon emitter bundle ordered. Sort the cables by length and label by output and run for installation ease. If you need to make a custom length cable, please note the following:

- Use solid conductor 24 AWG CAT-3, 5, 5e, 6, or 7 cable that meets local code requirements.
- If the system is installed in a return air plenum, the cable must be plenum rated.
- Shielding is not required. Unshielded twisted pair (UTP) cable is acceptable.
- Snagless boots are not required.
- RJ-45 plugs must use the “bent 3-tine” RJ-45 plugs intended for use with solid core CAT wire. Three-tine plugs can be purchased at a hardware store and from most CAT cable suppliers. DO NOT USE the “aligned two-tine” type intended for stranded wire, as they provide improper contact and may yield intermittent system operation. The diagram below shows the cross section view of both types.

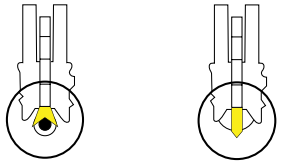

Correct
RJ-45 Connector
with bent type

Incorrect
RJ-45 Connector
with aligned type

- Field test each cable after fabrication with the RJ-45 connectors (before final installation), with a standard network LAN tester to check for continuity, shorts, and 1:1 (straight through) connection before installation.
- Factory Cables are terminated using EIA/TIA568B standard pinout.

Panel Connections

Network Ports

All Qt X controllers are equipped with two RJ45 network ports for Media and Control.

All Qt X controllers can be configured to use single or *dual cable modes. Single cable mode is the default with all information carried on Port 1.

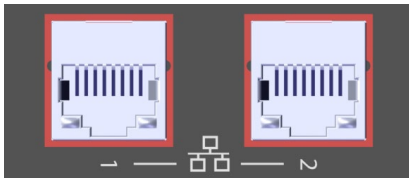

Network Ports (continued)

Single Cable Mode: Control network and Media network are combined using the same network infrastructure. Both Media and Control information share the same switch port. In this mode the #2 port is disabled.

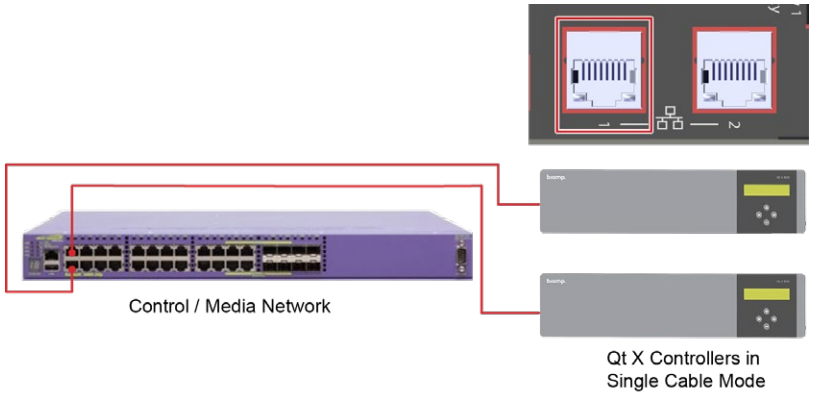

***Dual Cable Mode:** Control network and Media network traffic are on different networks - Control from an enterprise network for management; Media is physically on a separate network. More information about AVB & Dante switch requirements can be found in our Cornerstone Knowledge Base <here>.

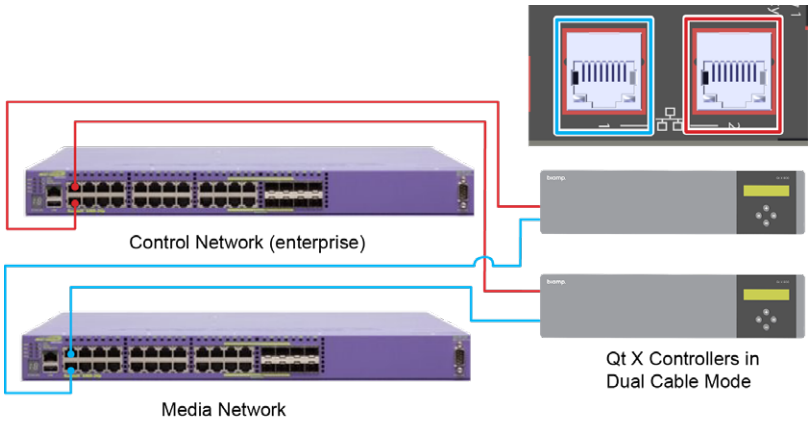

** Items with an asterisk '*' will be included in future firmware releases*

Panel Connections *(continued)*)

Contact Closures

The Qt X provides a mute capability for masking and/or audio. #1 position is configured for Fire or Emergency panel input. The contact closure utilizes the same style green euroblock connector as the privacy lights and GPIO (4-pin). See Figure 5.

- To instantly mute sound masking, connect a two-conductor cable to the two contact closure connectors, labeled (1-Gnd).
- To use this feature with audio, configured as Push-to-Talk (Input 2 only), connect a two-conductor cable to the two connectors, labeled (2-Gnd).

The opposite end of the above-described connections (treated as pairs/circuits) are terminated at a closure mechanism:

- To disable sound masking, the circuit should be "closed".
- To resume sound masking, the circuit should be "open".

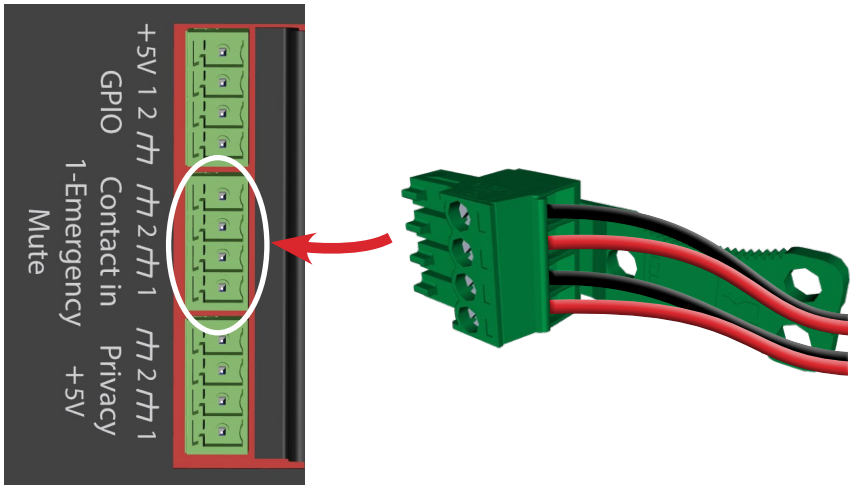

Figure 5. Contact closure connection / wiring

GPIO (General Purpose Input Outputs)

The logic port connections can be configured as either an input or output trigger in either "Active Low" or "Active High" states. This is useful for applications where events may be triggered to offer functionality inside Qt X (as an Input) or indicate a condition within Qt X (as an Output). Unchecking the "Active Low" box results in an "Active High" state. See Figure 6.

NOTE: The top socket labeled +5V is reserved for future use.

Input / Mute Function: By connecting to a contact in an "Active Low" state, the selected zones will mute all sound masking, background music, and paging sources - effectively muting all sound from selected zones upon a contact closure (closed). Changing the state to "Active High" will mute all sources of the zones when the contact is open.

Input / Push-to-Talk (PTT) **Function:** When an incoming contact is closed ("Active Low") the audio source shown will be sent to all zones selected under the Zone Name dialog. This results in background music muted in the selected zones and the audio source chosen to be adjustable on the Zone Paging Level control. Changing the state to "Active High" will route the selected audio source to the selected zone(s) when the contact is open.

Output / Mute: Provides indication of a GPIO Input Mute condition present on a specific zone. When in "Active High" state a mute initiated by the GPIO input on any of the selected zone(s) will result in +5VDC being present across Pin 1 or 2 (dependent on IO Output port) and GND. Switching the output to "Active Low" indicates the selected zone is unmuted.

Output / Talk Now: Provides indication of the state of the Push-to-Talk (Contact Input #2) or any available IO port configured as an Input Push-to-Talk. Selection of associated port is done by selecting from the Page Control drop down. This functionality is useful to indicate that a person can now speak into an active microphone by illuminating an LED (+5 VDC) when a specific Push-to-Talk contact is active. Connect Pin 1 or 2 (dependent on IO Output Port) and GND Pin in an "Active High" state and the LED will illuminate when the associated Push-to-Talk input is active. Selecting the "Active Low" checkbox will provide +5VDC voltage to the "Talk Now" output port when the associated Push-to-Talk input is inactive, indicating a paging microphone is in a ready condition.

WARNING: Mute functionality should only be used in situations where it is permissible to disable a zone in very select instances. (i.e. a conference room with audio conferencing technology) *It is never acceptable to mute sound masking in areas when building occupants might be present.*

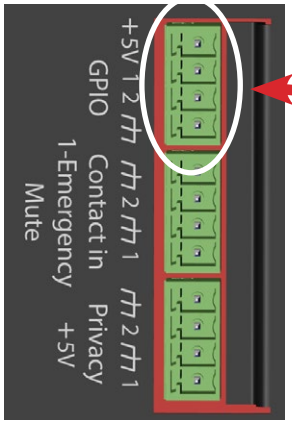

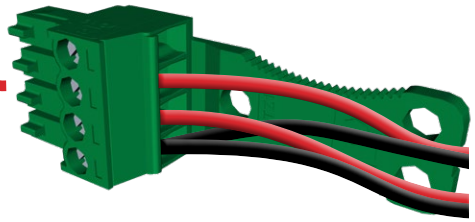

IMPORTANT: Note conductor designations for this connector
(Behavior is assigned in the software or web UI)

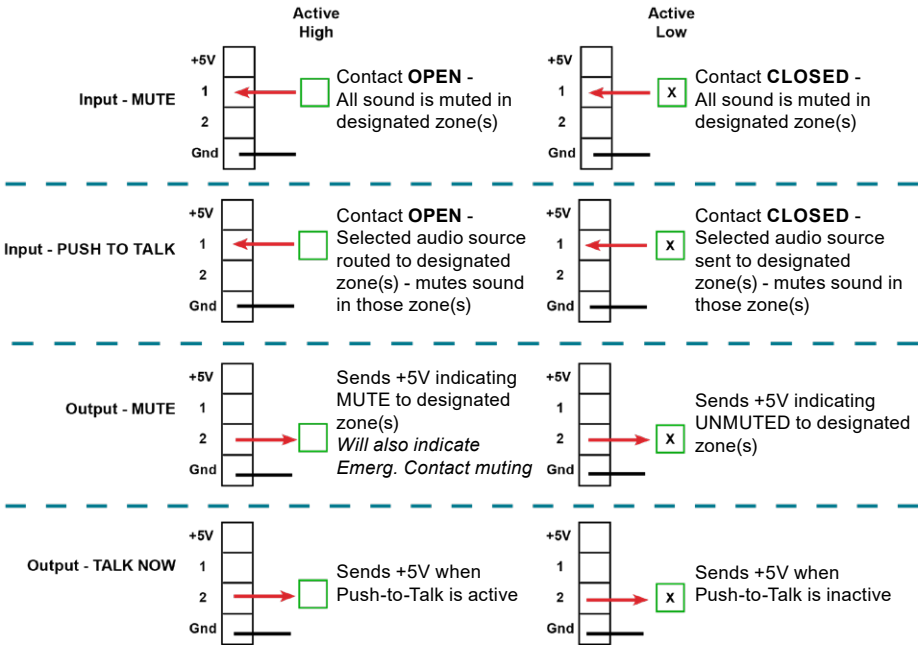

Figure 6. GPIO connection / wiring

Privacy Lights Outputs

Two ports are provided to interface with privacy lights panels. They may be designated to 2 different zones and should be home run from the controller to the privacy panel. See Figures 7-8.

5 VDC outputs are available to indicate sound masking is active on a specific zone as indicated by privacy lights. The functionality is as follows;

Privacy 1 - Connect the positive lead of a privacy sign to Pin 1 and GND (observe polarity). Select a zone in the Zone Name dialog to associate the Privacy light to a specific sound masking zone. When the zone is active (above -20dB in level) the privacy light will illuminate.

Privacy 2 – Same behavior as indicated above with privacy sign connections to Pin 2 and GND.

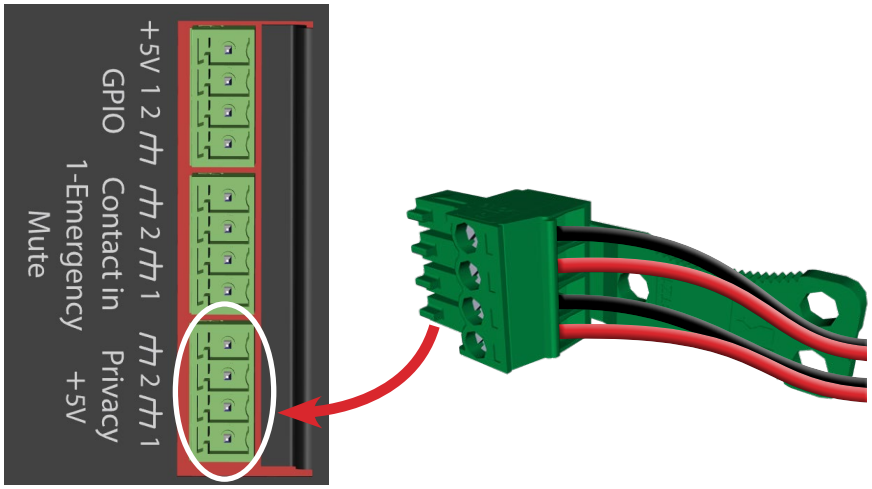

Figure 7. Privacy lights connection / wiring

Contact Connections (source)

Follow the instructions provided with the privacy sign to make sure that the unit is connected to the controller inputs correctly.

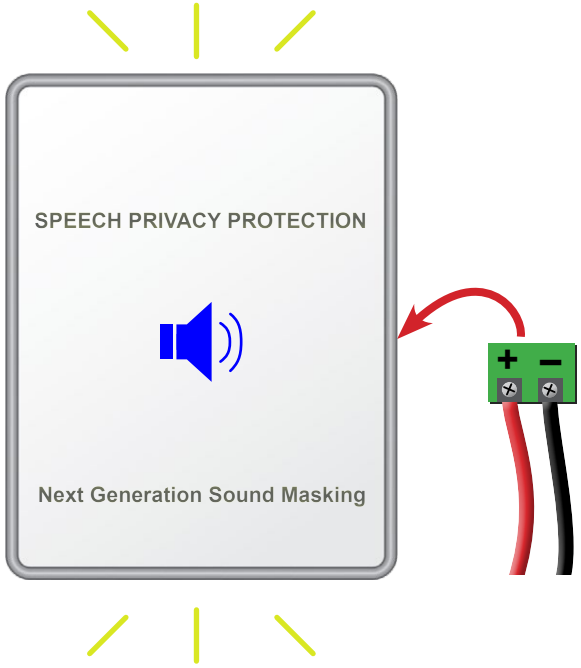

Figure 8. Typical privacy light panel connection

Inputs - Paging and Music

Paging and music sources may be connected to the Qt X audio inputs for distribution throughout select zones. Specific instruction on settings levels in different zones is covered in the Qt X Software help.

The steps that follow give instructions on connecting paging and audio to the Qt X.

For balanced audio inputs:

1. Disconnect power from the Qt X.
2. For balanced audio inputs, connect signal wires to the positive (+) and negative (-) terminals at either of the MIC/Line inputs. Connect the shield to GND at the audio source, as shown in Figure 9-1, below.

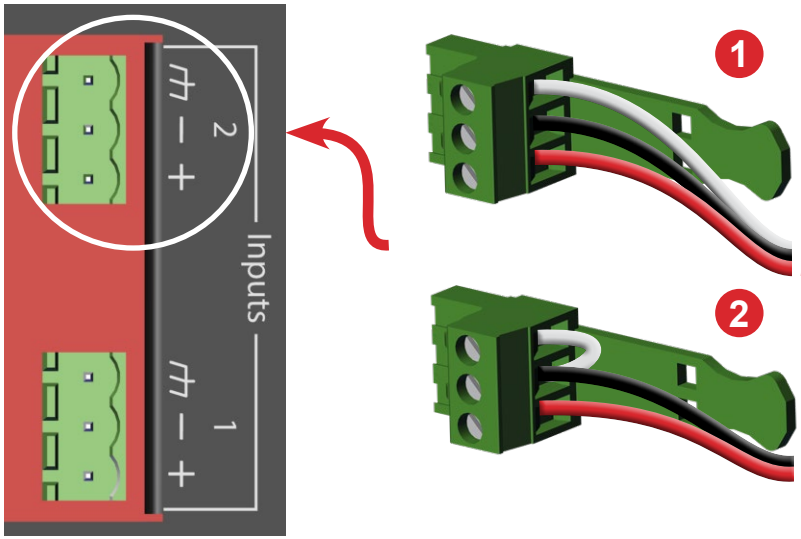

Figure 9 (1-2). Input connections / wiring
(Qt X 600 panel shown)

For unbalanced audio inputs:

1. Disconnect power from the Qt X.
2. For mono unbalanced line level signals connect the positive (+) and negative (-) terminals. Place a short jumper wire between negative (-) and GND terminals as shown in Figure 9-2, below.
3. For stereo line level signals, utilize a stereo to balanced converter (Radio Design Labs TX-J2 or equivalent). Connect Balanced output of converter as described in note 2 above.

Paging and Music Connections (source)

Follow the instructions provided with the device to make sure that the unit is connected to the controller inputs correctly. See Figure 10.

Qt X Logic I/O configuration:

MicPAT-D: configured as an Input, Push-to-Talk, Active Low, Input Gain Set to +48dB, Phantom Power OFF

MicPAT-2: configured as Inputs, Push-to-Talk, Active Low, Input Gain Set to +48dB, Phantom Power OFF

NPX: Connection and configuration supported in a future firmware release.

NPX G1100

MICPAT-2

Wire	MicPAT-D	MicPAT-2
White	Audio +	Audio +
Red	Audio –	Audio –
Black	Contact Gnd	Button 1 Contact
Yellow	Contact	Contact Gnd
Blue		Button 2 Contact
Green		
Orange		
Shield	Audio Gnd	Audio Gnd

Figure 10. Typical source connections

Outputs - Sound masking devices

Emitters - Qt X 300/600 models

The Qt X control modules support installation of both Qt Standard and Active emitters. Both emitter types are 'direct field' devices, mounted downward for direct unimpeded transfer of the audio signal to the listening location (Figure 11).

Qt Passive emitter

The passive emitter is a passive audio loudspeaker device suitable for sound masking applications. This emitter receives an amplified signal directly from the Qt X control module via a UTP category cabling infrastructure. Maximum sound pressure levels with this type of emitter are 60dBA at 1 meter with a sound masking frequency response of 200Hz to 6.3kHz.

Qt Active Emitter

The active emitter is a self-powered audio loudspeaker device suitable for sound masking and paging/background music. This emitter contains an internal amplifier which receives the audio signal directly from the Qt X in addition to a direct current voltage which powers the active emitter. Both power supply(s) and power injectors are required for operation in addition to the Qt X. Maximum sound pressure levels with this type of emitter are 65dBA @ 1 meter with a sound masking frequency response of 125Hz to 8kHz. Maximum sound pressure levels for paging and background music are 74dBA @ 1 meter with a frequency response of 105Hz to 16kHz.

Qt Passive emitter

Qt Active Emitter

Figure 11. Emitters for use with Qt X 300/600 controllers

EMITTER INSTALLATION *(Qt X 300/600 models)*

Each cable run has a maximum length of 1000 ft (305m).

The tables that follow give the number of emitters that may be installed in a given cable run, output, etc. per Qt X device. Each output has two identical runs (A and B). The emitters in both output runs are controlled equally and **must** be of the same emitter type.

Qt X 300 - Emitter Installation Totals			
Emitter Type	*Per Cable Run*	*Per Output*	*Total (3 Outputs)**
Standard	60	120	360
Active	50	100	300

Qt X 600 - Emitter Installation Totals			
Emitter Type	*Per Cable Run*	*Per Output*	*Total (6 Outputs)**
Standard	60	120	720
Active	50	100	600

** Output total assumes the same emitter type in each output. Total emitter counts will vary per device if both standard and active emitters are present in a system.*

NOTE: for open ceilings or other installations that do not secure to a tile, other mounting options are available (such as hanging pendants). See Biamp's product offerings for information.

NOTE: Active and passive emitters are installed identically. On the passive emitters, the input and output ports are labeled as such: INPUT, OUTPUT.

On the active emitters, the input is labeled and the output as . The input can be located by identifying the jack nearest the seismic keyhole on the rear of the emitter

It is critically important that the emitters are wired / located following the layout and wiring diagram from the Design Team to prevent any signal interference. In addition, please review the general emitter placement and wiring information on pages 14-18.

NOTE: For Active Emitters, a Qt Power Injector (purchased separately) will need to be installed directly adjacent to the first emitter. Each output on the power injector can power up to 25 Active Emitters (up to 50 for each cable run). A Qt Power Supply (also purchased separately) is necessary to power the injectors and can power up to six (6) Qt power injectors (Figures 16-17).

1. Determine emitter installation locations based on the system plan provided by the Design Team. Run cables from the controller to the first emitter location for each run per output (Figure 15). Label the cabling such that the location of the run is easily identifiable at the point of connection to the Qt X. For example: Output 1A - main office, Output 2A - Lobby, etc.

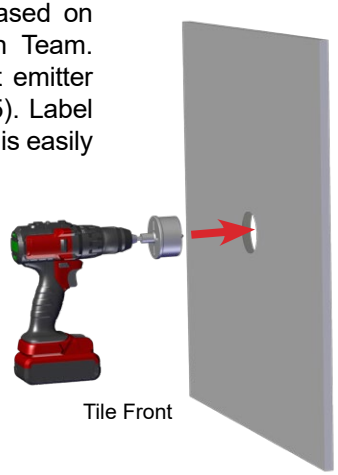

2. Ceiling tile mounting - use an appropriate tool and drill a 2.5" (64mm) size hole in the center of the appropriate ceiling tiles. Cut from the front of the tile. A hole saw bit is included with Qt X 300/600 models. *Other mounting options are available for open and structural ceilings. They include: Beam Brackets, Pendant Mounts, Drywall Mounts, New Construction Brackets, Plenum Back cans, and Universal Brackets.*

3. Power on the Qt X controller and set the standard sound masking level to 0 dB for the desired output # and associated zone.

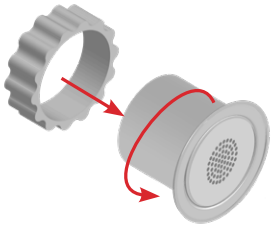

4. Install the first emitter in the ceiling tile by pushing the emitter through the front of the hole in tile and securing it with the locking ring. Connect the cable run from the Qt X output RJ45 connector to the INPUT connector of the first emitter (Figure 16). *The input jack has the rounded tab above it and can help if you can't see it easily.*

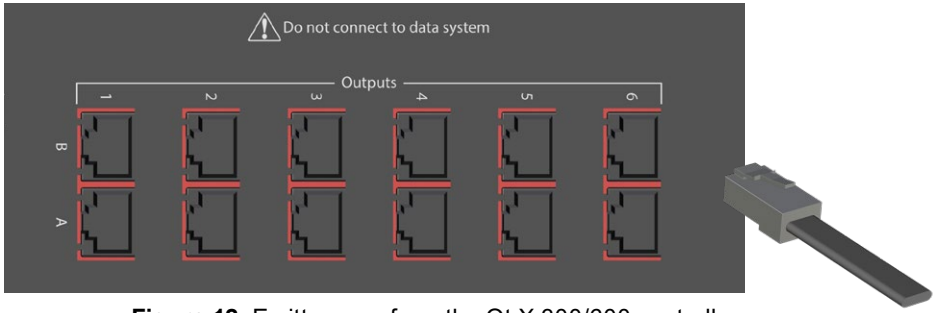

Figure 12. Emitter runs from the Qt X 300/600 controllers (Qt X 600 panel shown)

Emitter Installation *(continued)*

5. Listen to the emitter after it is connected. It should produce a 'whooshing' sound. If it does not produce sound refer to the troubleshooting steps at right.
6. Connect a cable to the output of the installed emitter (Figure 13) and run that cable to the next emitter location. Install the next emitter in the run. Connect that output cable to the input port of the newly installed emitter and repeat Step 5, above.
7. Repeat Step 5 and 6 until all emitters are installed. Secure cabling as needed and per any local building codes. A safety cable may be attached to the small keyhole above the input jack.

   NOTE: Do not continue with cabling/emitter installation if the emitter fails to emit sound.

IMPORTANT: Never swap (reverse) the In/Out jacks when installing emitters as it could result in an overload condition which forces a controller error condition.

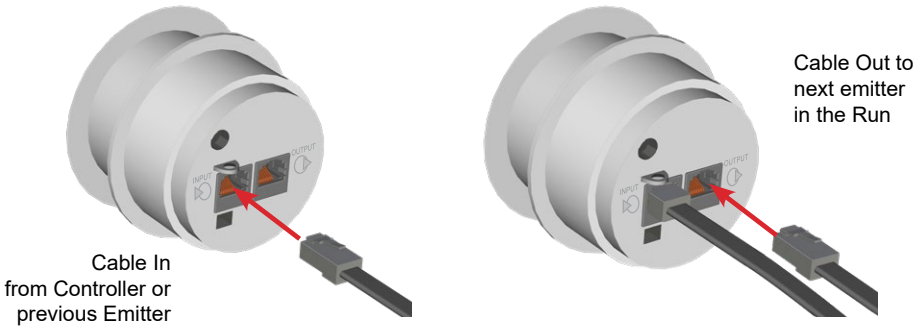

Figure 13. Correctly Wire Emitters

8. Set sound masking volume levels for each zone, using either the front panel controls, the web control interface or QtX software. Set sound levels according to suggested sound masking levels on page 23. If a small area within a zone exhibits a perceived volume louder than the rest of the zone, due to a difference in acoustics, use the adjustable dip switch on the back of each related emitter to turn the volume down (by 3, 6, or 9 dB on the passive emitters, or 1.5, 3 or 4.5 dB on the active emitters from the value set at the controller). See emitter data sheet for more details.

IMPORTANT: When using Active emitters, it is necessary to select "Active" speaker type in the "Output tab" by connecting to the controller with either the Qt X software or web UI. It is not assignable from the front panel. Passive emitters are the default output type and Active emitters employ a different sound masking spectrum. If the emitter type isn't changed to Active, the installer may not be able to properly adjust the output levels for proper masking performance

Emitter Spacing Guidelines

- Maintain a square or rectangular pattern with distances/spacing based on ceiling or mounting height.
- Maintain a 2 ft (.6 m) minimum distance from any sound-reflecting surface.
- Maximum distance from a sound reflective surface is the emitter spacing distance divided by two.
- Emitters may be moved up to 2 ft (.6 m) outside of the spacing guidelines to avoid obstacles.
- Refer to the System Plan provided by the Design Team for general zone and emitter placement.

If emitters fail to produce sound, try the following troubleshooting steps:

- Try a different emitter.
- Test the four (4) previous cables in the run for continuity and shorts. Repair or replace faulty cabling.
- If a short is present, circuit protection will engage and all sound masking will shut off. If the short is properly repaired, the protection state should clear itself in 5-6 minutes.

Numbers of Emitters in a Small Enclosed Area

Enclosed Area Sq Feet (m^2)	Number of Emitters	Recommended Layout
up to 180 ft^2 (16.7 m^2)	2	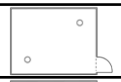
181 - 260 ft^2 (16.8 - 24.2 m^2)	3	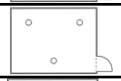
261 - 340 ft^2 (24.2 - 31.6 m^2)	4	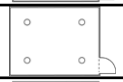
341 - 420 ft^2 (31.7 - 39.0 m^2)	5	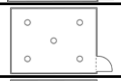
4210 - 500 ft^2 (39.1 - 46.4 m^2)	6	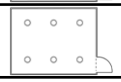
More than 500' (46.4 m^2)	Use large area / open office guidelines	

Emitter Installation *(continued)*

Layouts may be adjusted by up to 2 ft (.6m) in small rooms with ceiling tiles to avoid placement close to obstacles or walls. We suggest that the distance be decreased rather than increased to maintain adequate coverage. See Figures 14-15.

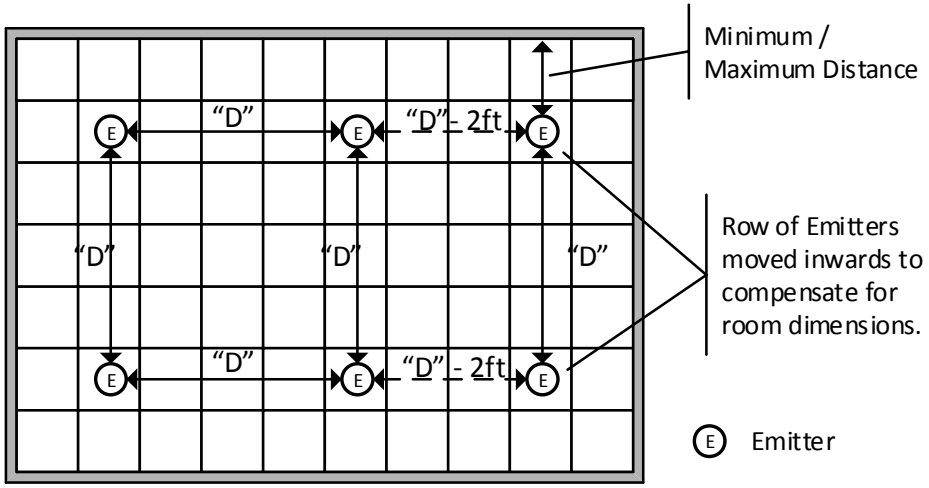

Figure 14. Standard Layout with 2'x2' ceiling tiles with an adjustment for the room size.

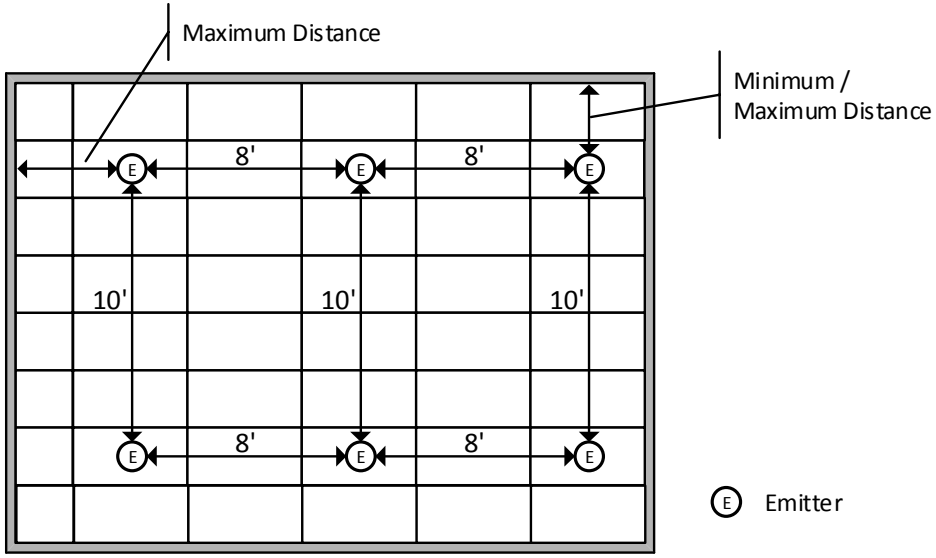

Figure 15. 10' x 8' room layout with 2'x4' ceiling tiles

Standard and Active Emitter Spacing

Emitter Mounting Height*	Emitter Spacing - 2'x2' ACT, Open or Solid-Surface Ceilings	Emitter Spacing - 2'x4' ACT Ceilings	Min Distance from Wall or Obstacle	Max Distance from Wall or Obstacle
< 8' – 9' (2.4 – 2.8 m)	8' x 8' (2.4 x 2.4 m)	8' x 8' (2.4 x 2.4 m)	2' (.6 m)	4' (1.2 m)
9' – 10' (2..8 – 3.1 m)	10' x 10' (3.1 x 3.1 m)	10' x 8' (3.1 x 2.4m)	2' (.6 m)	5' (1.5 m)
10' – 11' (3.1 – 3.4 m)	10' x 10' (3.1 x 3.1 m)	10' x 8' (3.1 x 2.4m)	2' (.6 m)	5' (1.5 m)
11' – 12' (3.4 – 3.7 m)	12' x 12'(3.7 x 3.7 m)	12' x 12' (3.7 x 3.7 m)	2' (.6 m)	6' (1.8 m)
12' – 14' (3.7 – 4.3 m)	12' x 12' (3.7 x 3.7 m)	12' x 12' (3.7 x 3.7 m)	2' (.6 m)	6' (1.8 m)
14' + (4.3 m+)	Contact Biamp Support	Contact Biamp Support	2' (.6 m)	7' (2.1 m)

*Mounting height may not always be at the ceiling height

Telephone Rooms/Exam Rooms/Mothers Rooms Emitter Spacing

It is permissible to install a single emitter in very small spaces to gain privacy where the duration of occupancy is limited and specific installation conditions can be met. Such spaces include dedicated Telephone Rooms in office environments or Exam Rooms in a clinic environment. A single emitter is acceptable means of coverage if the following statements are true:

- Occupancy is typically less than 1 hour per visit.
- The area of room is less than or equal to the room size below based on ceiling heights.
- A dedicated zone is used for a use similar to a single-emitter room, which allows for adequate adjustment.

Emitter Mounting Height*	Maximum Room Size	Sound Masking Exposure Duration	Use of a Single Emitter
8' – 9' (2.4 – 2.8 m)	< 64 ft^2 (5.9 m^2)	Less than 1 hour	OK
9' – 11' (2..8 – 3.4 m)	< 100 ft^2 (9.3 m^2)	Less than 1 hour	OK
11' – 14' (3.4 – 4.3 m)	<144 ft^2 (13.4 m^2)	Less than 1 hour	OK
over 14' (4.3 m)	Call Biamp Support	Less than 1 hour	OK

In cases where the time duration of exposure, the room size exceeds the recommended ceiling height, or the emitter location is offset due to ceiling conflicts, refer to the chart on the previous page (Emitters in a Small Enclosed Area) for multiple emitter placement.

Emitter Installation *(continued)*

Basics of Qt X 300/600 outputs: maximum signal run, channel definitions, output run architecture and spacing in small rooms per ceiling height. See Figures 16-18.

Passive emitter Outputs

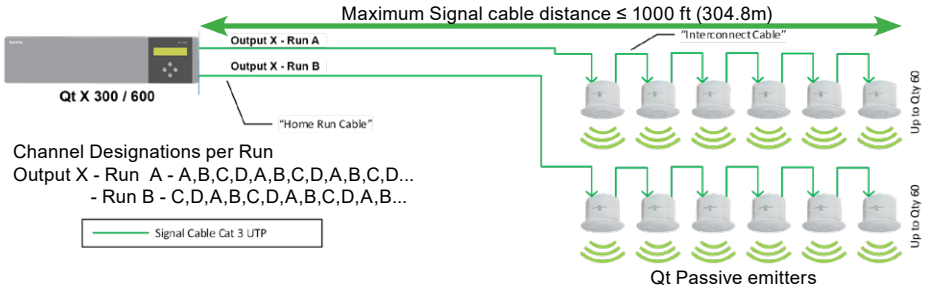

Figure 16. Passive emitter runs and channel designations

Room Control (QT-RC3 - Accessory option)

VERY IMPORTANT: Use of the Qt-RC3 room control is ONLY recommended for zones broadcasting background music or paging and only when the control needs to be accessible by building occupants. Qt-RC3 room controls should NOT be used for user control of sound masking signals except in some unique healthcare applications. Consult the Cornerstone document <here> for more information. NEVER use Qt-RC3 room controls for private office control of sound masking signals.

The Qt Room Control can be used to adjust the sound masking level for an individual room or a space with up to 8 Emitters. Room Controls can be placed in the cable run and will count as 2 passive emitters in the total number of devices per run. They do not count against the device total if used with Active emitters. Additional information regarding layout and installation is available <here>.

Active Emitter Outputs

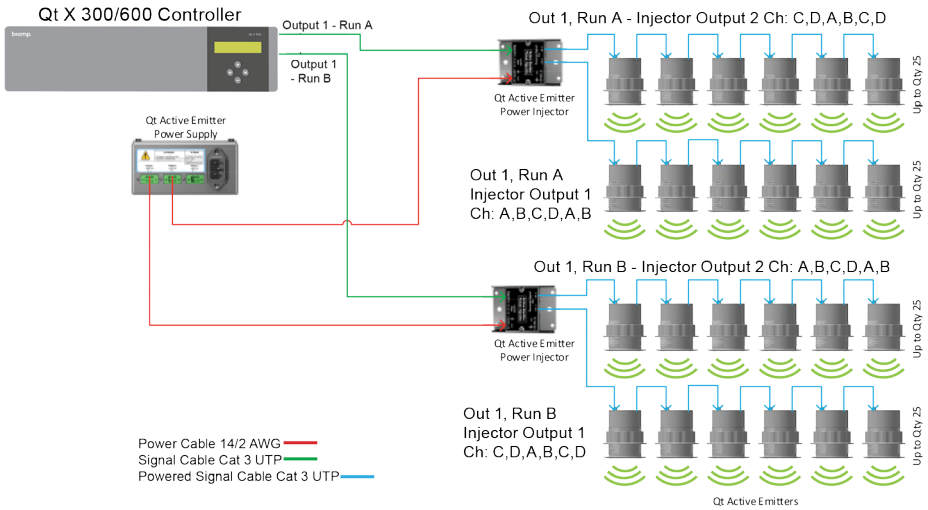

Figure 17. Active emitter runs and channel designations

Active Emitter - Maximum cable lengths

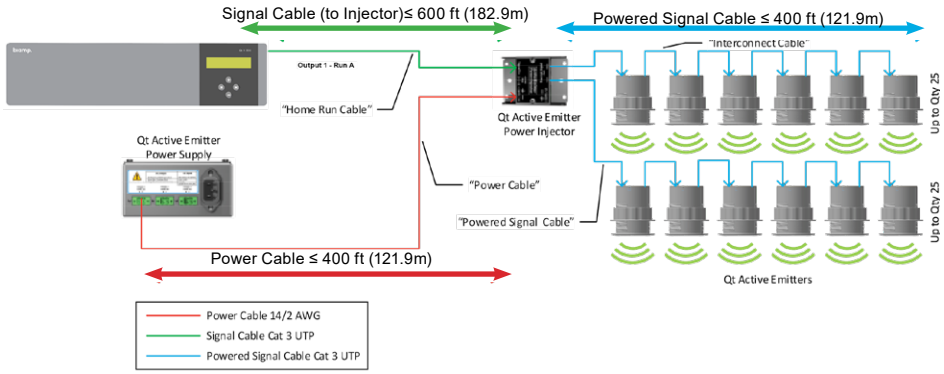

Figure 18. Active emitter maximum cable lengths

Emitter Run Layout - Correct and Incorrect

Layouts below show runs with Passive emitters; the same layout will work for Active Emitter runs with the addition of the power injector prior to the 1st Qt Active Emitter. The same emitter type must be on both the A & B runs of any output, and are applicable for both the Qt X 300 and 600 models.

CORRECT

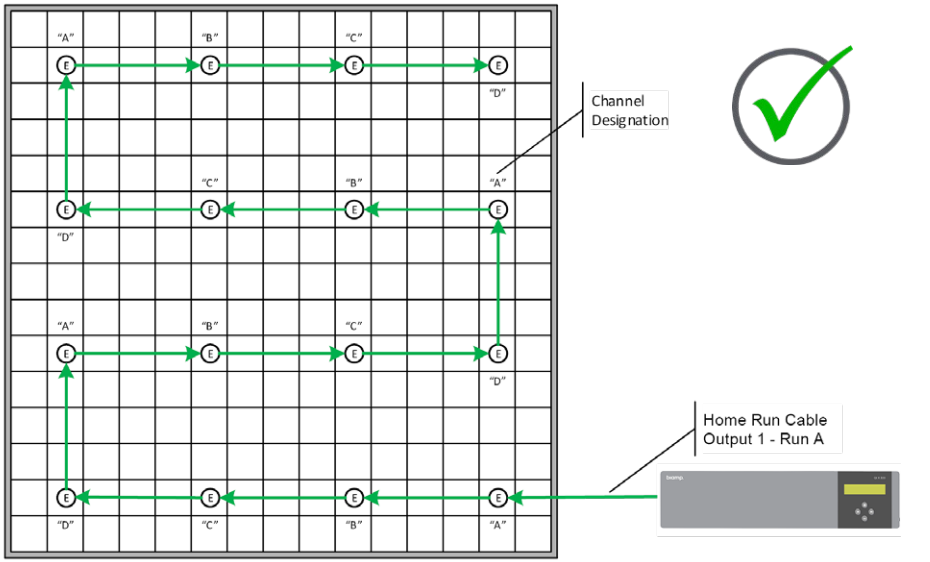

Emitters

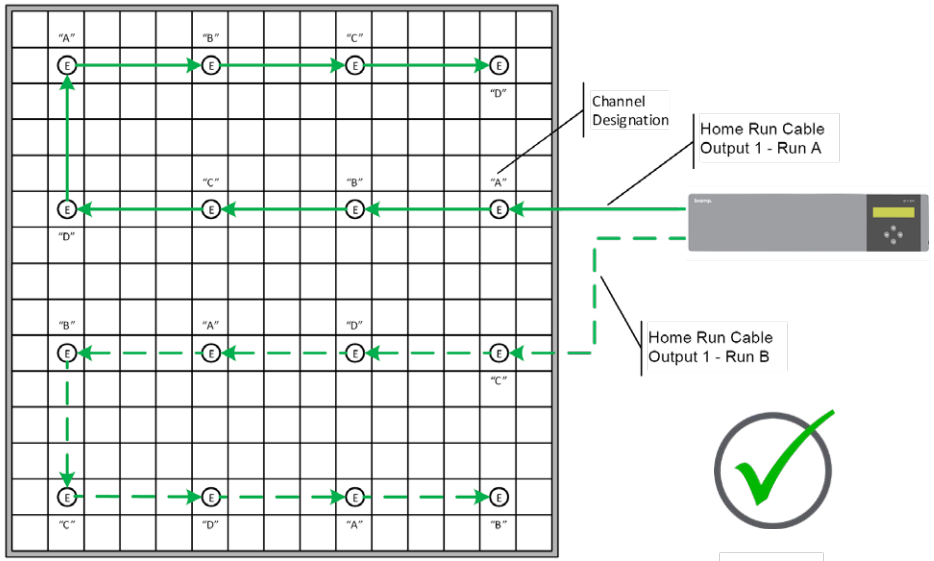

Emitters

INCORRECT

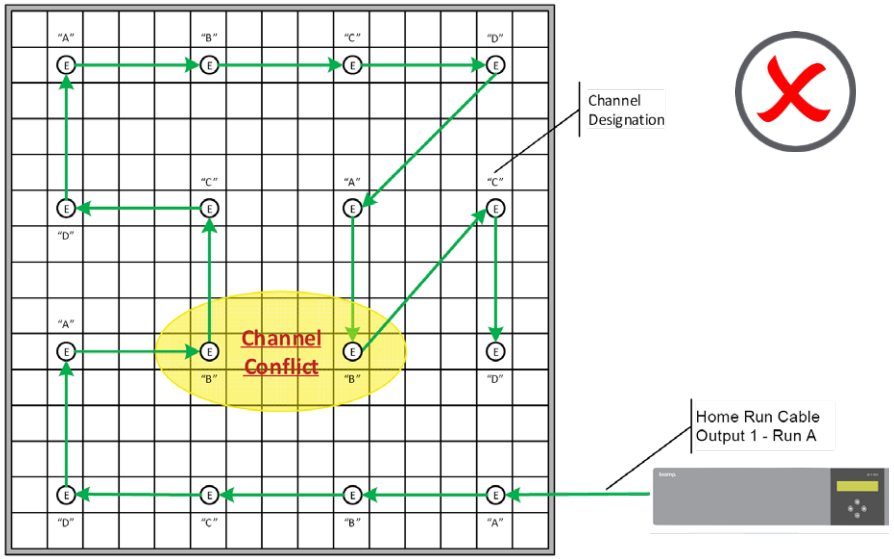

Emitters

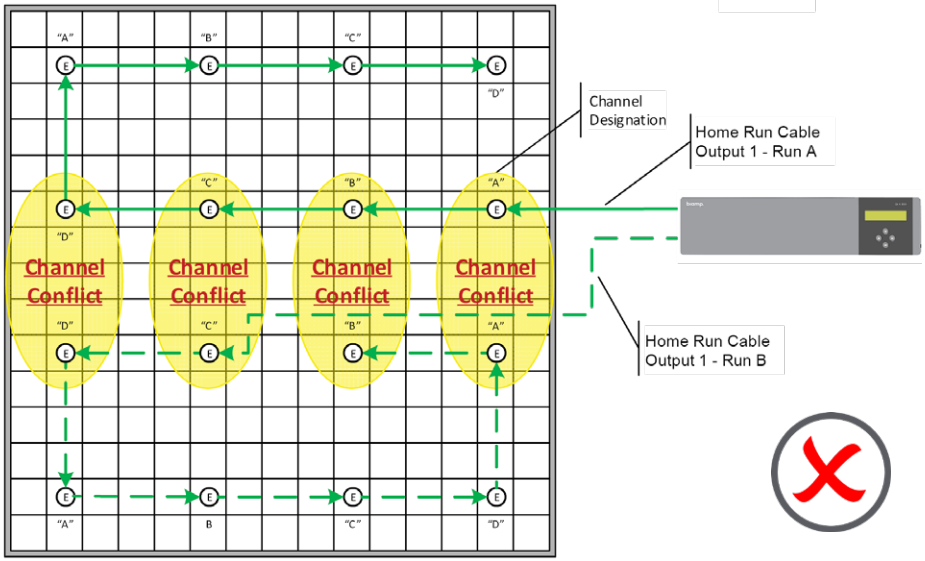

Emitters

Emitter Installation in Hallways or Corridors

Emitter spacing in hallways and corridors should adhere to the same spacing standards as used for larger open offices, with the distance between emitters being based on emitter mounting/ceiling heights. See Figure 19. Minimum and maximum distances from walls and other obstructions should also be maintained, as outlined for open space sound masking deployment. (See Emitter Spacing table)

It is preferred that each hallway/corridor area be treated as a separate sound masking zone to allow for independent level adjustment in most applications. This is especially important when adjoining areas of lower sound masking levels such as private offices. An exception can occur however when open office spaces are connected to a hallway or corridor as follows:

- When a wider hallway extends from an open office area, it is permissible to continue the open office zone into the hallway with no level adjustment. This may occur when hallway width is greater than the emitter spacing used for the open office.
- In cases where hallway width is less than the emitter spacing used in the open office, the space should be either a separate zone, or have the DIP switch attenuation applied at the corridor emitters. Each corridor emitter can be attenuated downward -3 dB (-1.5 dB for Active emitters) if ceiling heights/materials match and rear emitter DIP switches are used to compensate for the decrease level required.

Mixing Qt Emitter Types

Both the Qt Standard and Qt Active Emitters may be used on the same sound masking project with signals supplied by a single Qt X Controller if they are assigned to different outputs. For example, a Qt X 300 may supply sound masking with Qt Passive emitters to an open office on Output 1, while simultaneously supplying both sound masking and paging to private offices with Qt Active Emitters on Output 2. Additionally, Output 3 can supply sound masking and light music to a reception area with Qt Active Emitters.

IMPORTANT: Do not mix emitter types in the same output.

NOTE: Emitter type selection must be made on an output-by-output basis with the web interface or Qt X software. Passive emitters are the default type for the Qt X 300/600 models.

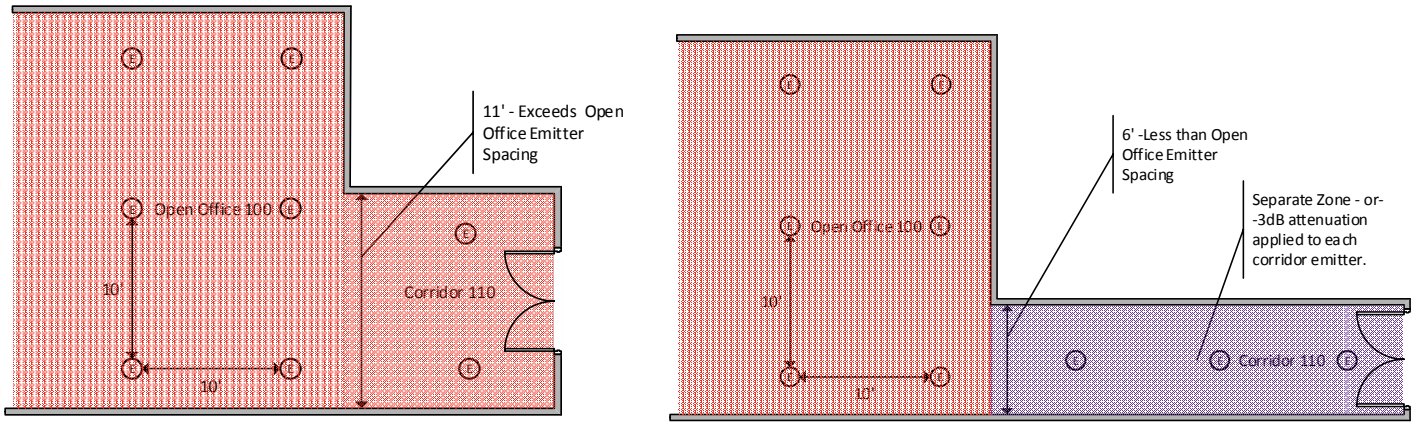

Corridor - Single zone extension of an open office

Corridor - Separate zone from an open office

Figure 19. Emitter placement / zones in hallways

INTERACTING WITH A Qt X SYSTEM

There are two (2) current methods of accessing and configuring the system with differing levels of what can be viewed or affected. The front panel of each unit has very basic functionality - limited to basic information and operating mode of that particular controller. The web user interface gives the installer/user additional access to each system and can assign outputs to zones, set levels, set schedules and security for the system.

Controller Front Panel

The individual control panel menu give you access or control of this:

- FW version number
- Fault status message
- Hostname
- MAC address (Control)
- IP Address (Control)
- Netmask (Control)
- MAC Address (Media)
- IP Address (Media)
- Netmask (Media)
- Zone Audio level

Qt X Web Interface *(online help file <link>)*

The web interface allows you access or control to:

- Discover devices and assign them to a system
- Configure a sound masking system
- Create zones and assign outputs to them
- Define the Logic I/O for each controller
- Add and/or configure Audio sources
- Manage and configure Inputs, Zones, and Outputs
- Manage schedule and "Soft Start" planning
- View status and send changes to Zones, Devices, Faults, Outputs, Date/Time and System Info
- View or make changes to system, device and network settings
- Update Firmware
- Set security (user) access levels

** Items with an asterisk '*' will be included in future firmware releases*

Controller Front Panel Menu / Functionality

When the panel is powered up and connected, you can navigate through the basics of the system using the 4 push buttons under the front panel display. What you will be able to view is based on whether the controller is unconfigured (not part of a system) or configured (part of a defined network system). You can view the IP address and name of the device, the network mask of the device, and the current operating mode of the device - configured, unconfigured or updating firmware.

All Qt X controllers are pre-loaded with a default configuration where every output is assigned a specific output 1-> zone 1, output 2 -> zone 2, etc. To connect this controller to a larger Qt X system, the existing configuration needs to be removed/erased. This can be accomplished within the web interface or in the Qt X software.

On certain screens, the user can modify the values shown:

1. Press the down button to enter edit mode; cursor appears.
2. Up/down buttons rotate through 0-9.
3. Right/left buttons move cursor forward/backward.
4. Moving past the last character exits edit mode.

View the following information:

- Hostname
- MAC address (control)
- DHCP (control)
- IP Address (control)
- Netmask (control)
- MAC Address (media
- DHCP (media)
- IP Address (media)
- Netmask (media)
- FW version number
- Status message
- Audio output level - up/down buttons will increase or decrease the volume level

NOTE: The audio levels can be modified from the front panel after system configuration, but will not be reflected in the web UI unless it is refreshed. This is accomplished by "refreshing" the window in the web UI.

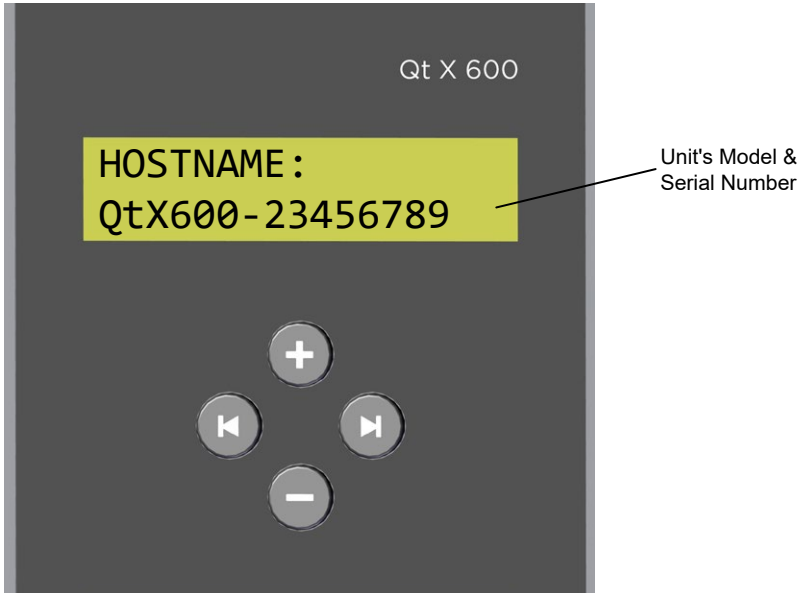

Typical front panel display *(simulated)*

Qt X Web Interface

The Qt X Web Interface (or web UI) is a browser-based user interface. This web interface allows users to configure sound-masking control devices in a sound-masking system, configure audio controls and additional functions that comprise a biamp sound-masking system. It can be accessed by inputting either the IP address or device name of the controller.

NOTE: You must be on-site directly connected to the controller or on the same WLAN or subnet that the system is on.

IMPORTANT: Please refer to the web help <here> for additional information on configuring a system or setting specific items.

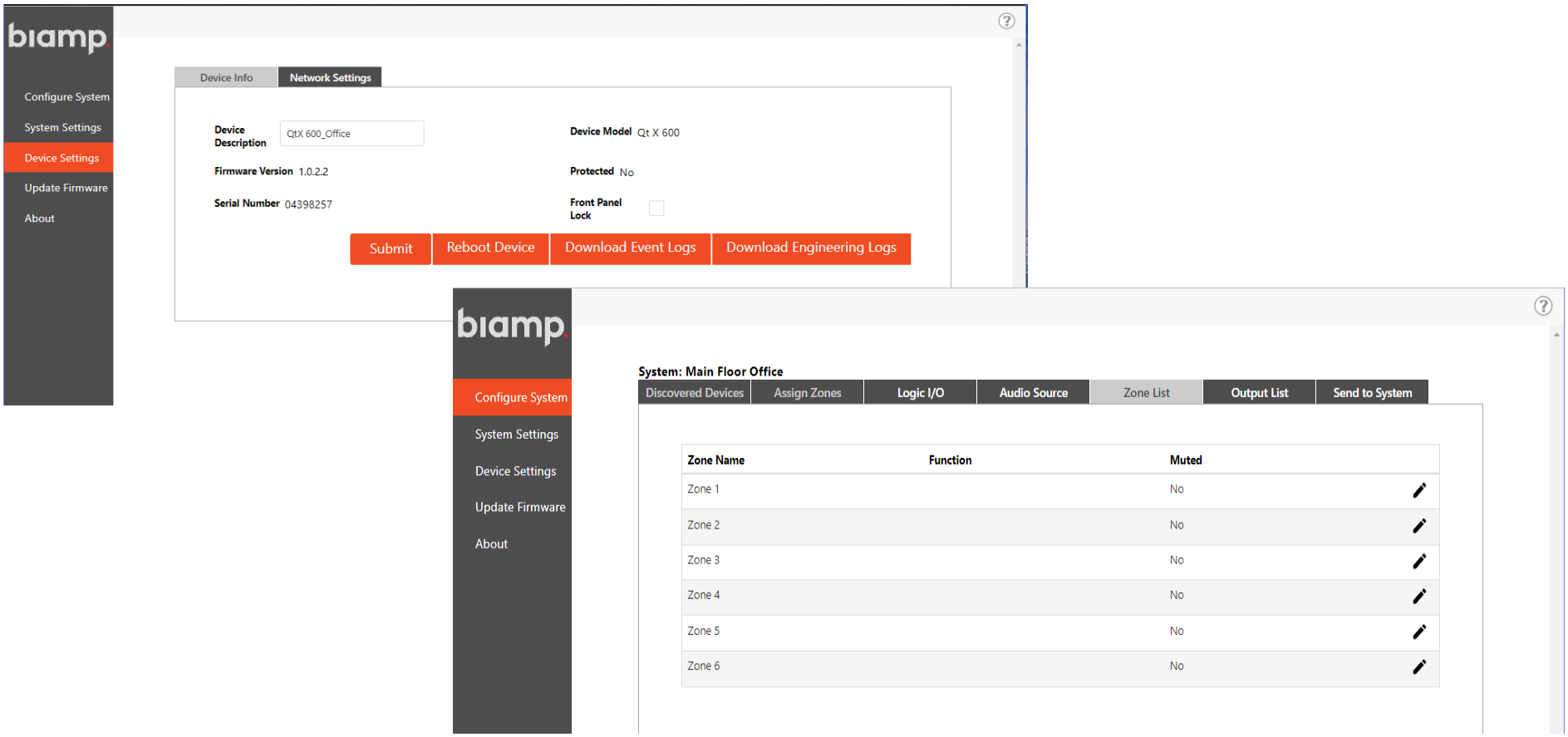

COMMISSION THE SYSTEM *(next steps)*

Once all of the components and their peripherals have been installed and are operational, they need to be configured into a networked sound masking system. Additional information to explain each of the configuration steps is available in the Qt X Web Interface help files.

Suggested order of operations for installation & commissioning a typical sound masking system.

- ❑ Configure each system using the Qt X web interface
  - ❑ Configure controller's IP Address, Network Operation Mode* (single / dual network cable)
  - ❑ Update firmware for all controllers
  - ❑ Create zones as required
  - ❑ Assign controller outputs to zones
  - ❑ Assign appropriate emitter type to the controller's output
  - ❑ Create music paging Audio Sources and assign to Zones (ensure emitter type in use supports audio sources)
  - ❑ Define behaviors of input and outputs
  - ❑ Set zone sound masking levels (42dBA SPL to 48dBA SPL) using a calibrated sound pressure meter. Measure at 4ft. (1.2m)
  - ❑ Adjust masking spectrum equalizer for each output as necessary to meet project requirements
  - ❑ Set system security / user levels and document passwords

    Important: Record the admin user name and password and keep with the system documentation. If the Admin level ID and password is lost there is NOT a means to recover it.
- ❑ Go through each zone testing / adjusting levels, checking behavior
  - ❑ Set Audio Source levels
  - ❑ Capture final sound masking spectrum and sound pressure level measurements for reporting if required
- ❑ Set soft start, schedules, etc., as necessary
- ❑ Document the schedules on a copy of the System Information Worksheet (on page 29 of this guide) and leave it with the system administrator
- ❑ Save system configuration using the "Download Configuration" button in the System Info tab (System Settings)

** Items with an asterisk '*' will be included in future firmware releases*

Setting Sound Masking Levels

Target sound masking levels may vary from area to area throughout a facility based on use. Multiple controller outputs may serve virtual zones of sound masking making user control and adjustment simplistic. Outputs may be adjusted independently to compensate for emitter mounting heights and architectural conditions present. Each virtual zone of Qt X sound masking may serve specific architectural spaces and include background music and/or paging signals (when used with supported emitters) by using external audio sources. Best practice in setting sound masking levels is to use a sound level meter. Typical sound level targets to create effective / comfortable sound masking for common office environments are as follows:

Zone Type	Measured dBA SPL
Private Office Zones	38-43 dBA
Open Area Zones	44-48 dBA
Corridors	42-45 dBA
A-weighted sound masking levels in dB SPL as measured 4ft (1.2m) above finished floor using a calibrated sound pressure level meter. (Class 1 SPL Meter / Microphone recommended)	

If no sound level meter is available, the levels above may be achieved in most environments by setting the Qt X sound masking volumes as follows:

Zone Type	Qt X Zone Setting	Ceiling Height
Private Office Zones	-5 dB to -1 dB	All ceiling heights
Open Area Zones	+1 dB to +4 dB	8 ft (2.4m)
	+3 dB to +6 dB	10 ft (3 m)
	+5 dB to +8 dB	12 ft (3.7 m)
Corridors	0 dB to +2 dB	All

Note: Levels based on individual output levels set to 0 dB

In cases where sound masking levels exceed these recommendations, especially in extremely quiet environments, occupant acceptance will diminish greatly leading to occupant complaints. This can result in dissatisfaction with the sound masked environment and a request by staff for eventual lowering of sound masking levels, ultimately reducing the effectiveness of the system. For this reason, each zone of a Qt X sound masking system should be calibrated and adjusted precisely upon installation completion using calibrated measurement equipment by the qualified installer.

Once sound masking levels are optimized for a space, it is always recommended to that they remain consistent indefinitely as very small changes in level can be noticed by building occupants as they occur. It is permissible however to adjust sound masking in small increments over long time spans at specific times of day using scheduling functionality. Reducing a sound masking levels at night (under conditions of little to no building occupancy) can be beneficial for security staff to hear/detect intrusion. Qt X provides daily scheduling functionality which allows attenuation of the sound masking levels between specific time frames to meet reduced masking level needs. These schedules include a “ramp duration time” in which the change in level is to occur, extending the gradual level adjustment across multiple hours slowly. This slow change in sound masking level helps to avoid detection of level changes by remaining building occupants. The table below indicates the recommended ramp duration time based on desired sound masking attenuation;

15 Minute Ramp Duration	<1 dB attenuation
30 Minute Ramp Duration	1 dB to 1.5 dB attenuation
60 Minute Ramp Duration	2 dB to 2.5 dB attenuation
90 Minute Ramp Duration	3 dB to 4 dB attenuation
120 Minute Ramp Duration	>4 dB attenuation

Effectiveness of a sound masking system is dependent on adequate volume level. Occupants will typically become accustomed to the sound masking noise.

If a sound masking system is introduced to a location that was previously occupied, it is necessary to introduce the sound masking to the occupants gradually. To do this the installer must use the "Soft Start" feature (configurable in the web interface). This provides an adjustment time period to slowly introduce the sound masked environment over a period of days/weeks. If the location is new, or was not previously occupied a Soft Start is not necessary.

Soft Start recommended settings -

Open Office	Set the attenuation to -5 dB over the course of 2 weeks
Private Office	Set the attenuation to -3 dB over the course of 1 week

See the Qt X web interface help <here> for more details on setting sound masking levels.

ACCESSORIES

Qt X Controller Accessories

Rack Mount Kit (Qt X RMT-KT) – allows a Qt X 300 or 600 to be mounted to a rack. See instruction to change from a wall mount (Qt X 300/600).

Plenum Mount Kit (Qt X PLMT-KT) – allows a Qt X 300 or 600 to be mounted in a plenum space and includes the mounting brackets. See Plenum Bracket instruction to change from other mounting options.

Qt Active Emitter Accessories

Power Supply (PS-AE-3) – has 3 outputs and can provide power for 1-3 PI-AE power injectors

Power Injector (PI-AE) – has 2 channel outputs - each channel will power up to 25 Qt Active Emitters in a single run

Emitter Mounting options

Universal Bracket (AE-UB-W, AE-UB-B) – Mount the Qt Active or Passive emitter to a wall or ceiling

Beam Bracket (AE-BB-W, AE-BB-B) – Mount the Qt Active or Passive emitter to exposed I-beams or trusses

Pendant Mount (PM-W, PM-B) – Suspend Qt Active or Passive emitters at an optimum height in open or raised ceiling spaces.

Drywall Mount (DM) – Mounting bracket for Qt Active or Passive emitters in drywall ceilings

Drywall Rough-in Bracket (DRB-1) – Install before drywall ceiling is hung. (DRB-1 Kit includes the Drywall Mount)

Ceiling Conduit Mount (4-pack) (CCM-1) – For mounting the emitter into acoustic ceiling tile or drywall in regions with special fire and/or conduit requirements. Ceiling tile and drywall mounting rails included. Compatible with both Qt Active and Passive emitters.

Conversion from Wall Mount to Rack Mount

1. Remove the wall mount bracket from the controller and reserve the M4 screws to attach the rack mount brackets later (Figure 20).
2. Disconnect the power supply supporting bracket from the wall mount bracket (Figure 21).

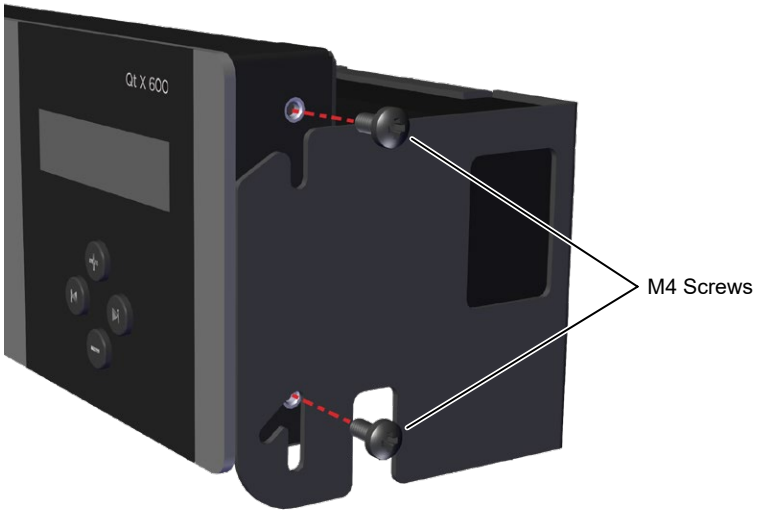

Figure 20. Remove screws and panel from wall mount bracket

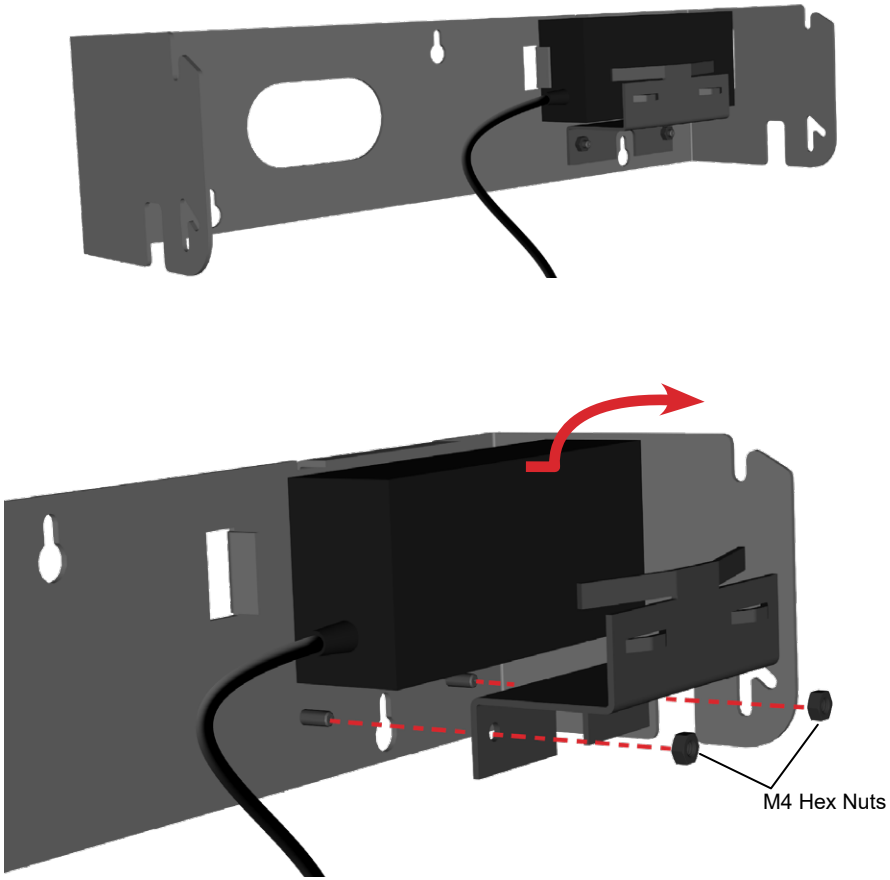

Figure 21. Remove bracket and power supply

Conversion from Wall Mount to Rack Mount *(continued)*

3. Attach the power supply bracket to the longer (R) rack ear with 2 M4 hex nuts and insert the power supply with power cord outlet located to the back (Figure 22).
4. Attach the rack ears to the Qt X device with the M4 screws removed in the first step. Mount the longer one with the power supply to the right side on the controller. The brackets and controller are marked with R/L. Match the bracket to the appropriate side of the controller (Figure 23).

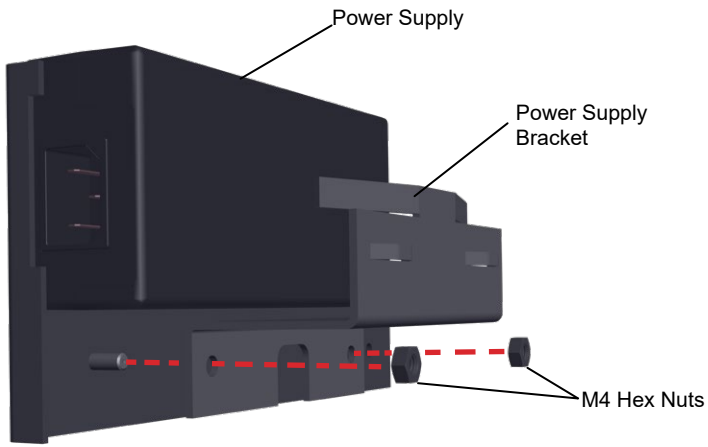

Figure 22. Reinstall bracket and power supply on long rack ear

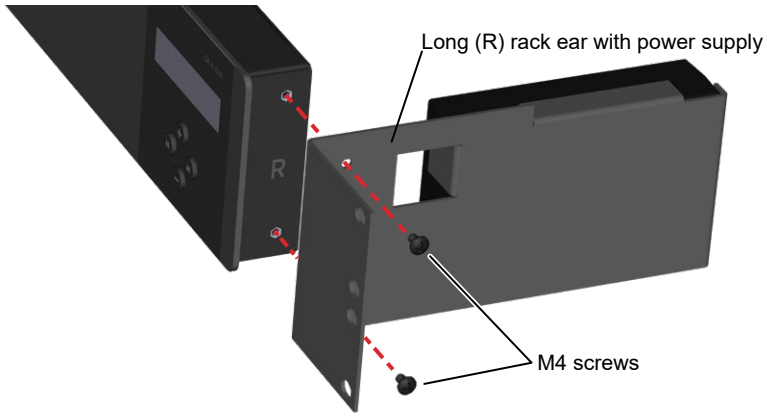

Figure 23. Attach rack ears to the controller

5. Secure the Qt X device to the rack via the rack ears as shown in Figure 24. Hardware to attach the unit to the rack is not included. Plug power cord into the rear of the power supply.

   NOTE: It may be easier to make all of the connections to the back panel prior to securing the controller to the rack. The controller will not rotate forward to allow access to the back panel when secured to the rack ears.

   TIP: Use cable ties to constrain extra cable lengths for a neat appearance and to reduce tangles.

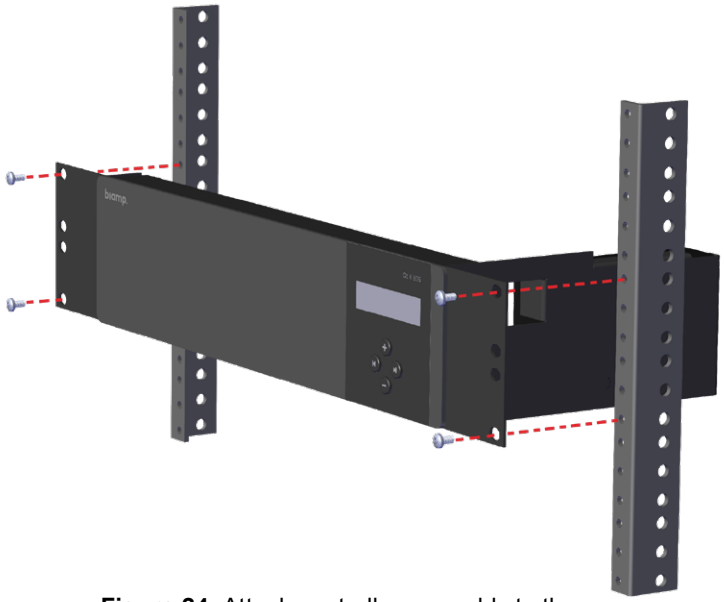

Figure 24. Attach controller assembly to the rack (hardware not provided)

Plenum Bracket Installation

A pair of mounting brackets and M4 screws are included with the plenum bracket kit. They can be positioned as shown below in any of 3 configurations to fit over a ceiling rail (shown in the smaller inset images). Chose the orientation that best fits your application (Figures 25-27). Orient brackets as shown – right (R) and left (L).

Remove the controller from any other bracket reserving the M4 screws for plenum bracket attachment. Secure each bracket with a screw threaded in the appropriate hole as noted on the smaller bracket drawing for each configuration. Both brackets must be installed in the same configuration to adequately secure the panel. Tighten the screws so that the controller doesn't move in the brackets.

A safety cable may be threaded through any of the open holes to prevent movement and/or further secure the unit in the ceiling.

Important Notes:

1. If the panel is installed in the face down position (below), an additional M4 screw must be installed in the lower holes on each side to prevent panel movement.
2. All wiring must be plenum rated if it is installed in a plenum space.
3. The installer is responsible for sourcing and installing the proper safety cable to meet all applicable local building codes and standards.

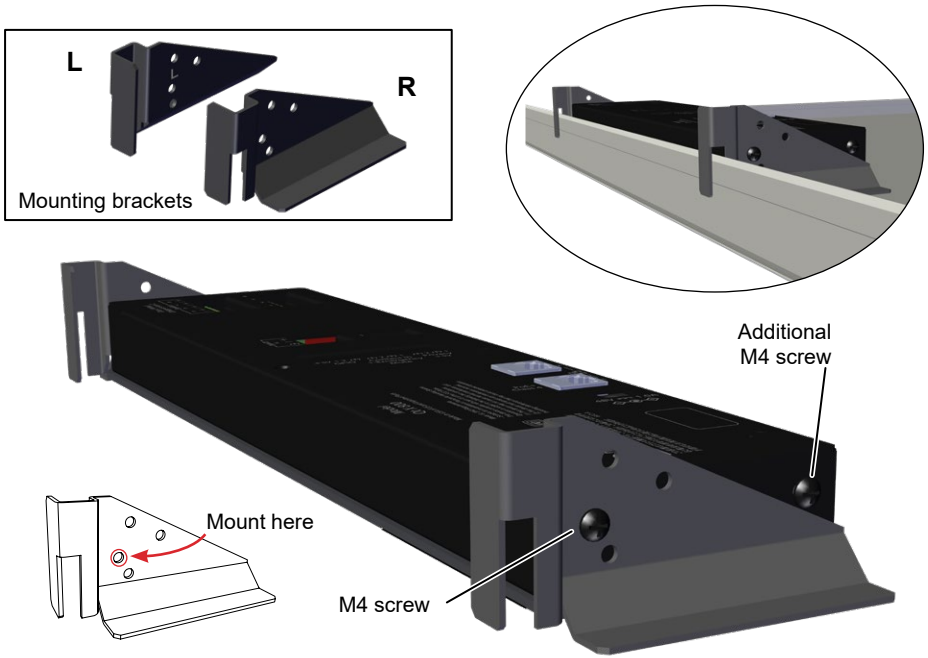

Figure 25. Controller is face down against the ceiling tile with an additional M4 screw on each side to prevent panel movement

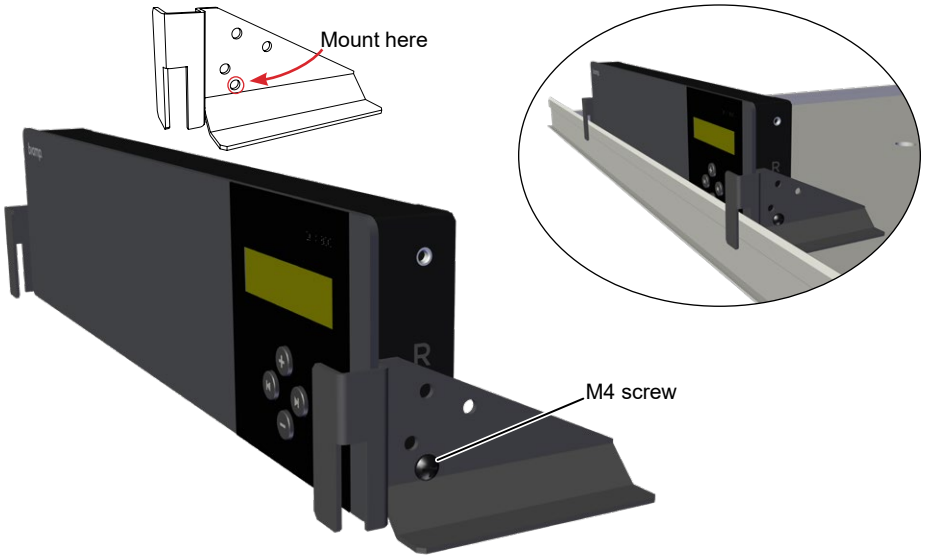

Figure 26. Base of controller is flush with the bottom of the brackets

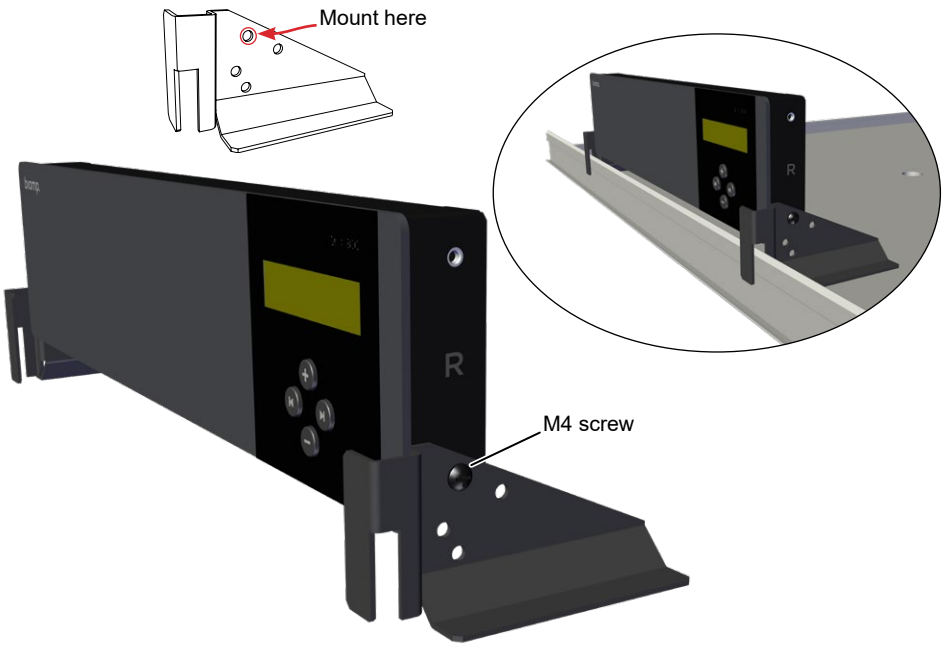

Figure 27. Controller is raised above the rail

Room Control (QT-RC3)

VERY IMPORTANT: Use of the Qt-RC3 room control is ONLY recommended for zones broadcasting background music or paging and only when the control needs to be accessible by building occupants. Qt-RC3 room controls should NOT be used for user control of sound masking signals except in some unique healthcare applications. Consult the Cornerstone document <link> for more information. NEVER use Qt-RC3 room controls for private office control of sound masking signals.

IMPORTANT: The status of the output volume to the area controlled by the Qt-RC3 is not reported back to the system controller, so visual/manual verification of the Qt-RC3 knob position is necessary to determine the output level in each individual room.

The Qt-RC3 room control may be used with Qt X 300/600 models in certain circumstances for localized control of sound masking, background music, and paging signals (all signals routed to the zone are affected). The Qt-RC3 connects in-line with emitters through an input port and passes the signal through an output port. The room port on the Qt-RC3 controls the sound level of up to eight emitters. Inserting the room control in-line with the cable run counts as two emitters on the run thus decreasing the total run count by two emitter devices.

Two layouts are presented at right *(Figure 28)***:**

1. One output from the controller with a Qt-RC3 at the end, controlling a closed room. Since the desired volume level for closed offices is less than for open ones, the Qt-RC3 should be used to turn the volume down to a more comfortable level for that space.
2. Two outputs from the Controller: This is the optimal layout when using Qt-RC3s. The cable run from the first output covers the open area while the second output cable covers the three closed rooms. The second output's cable goes to the first QT-RC3 and uses its built-in splitter to connect to the next QT-RC3, and then to the next. Each RC3 then connects to emitters in the room from the "Room" output jack to create a mini control area. After installation, each room should have the same maximum volume while the emitters in each room can be turned down by each room's Qt-RC3.

The full Installation and Operation Guide for the Qt-RC3 can be found <here>

1. Qt-RC3 in a Single Room *(at the end of a single output)*

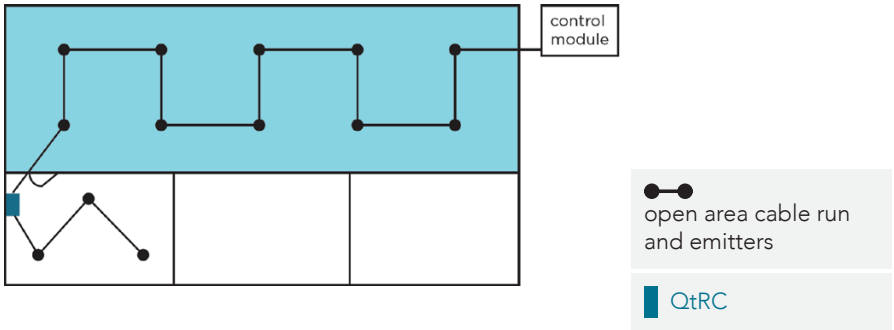

2. Qt-RC3 in Closed Rooms *(1 output - open area; 1 output - closed rooms)*

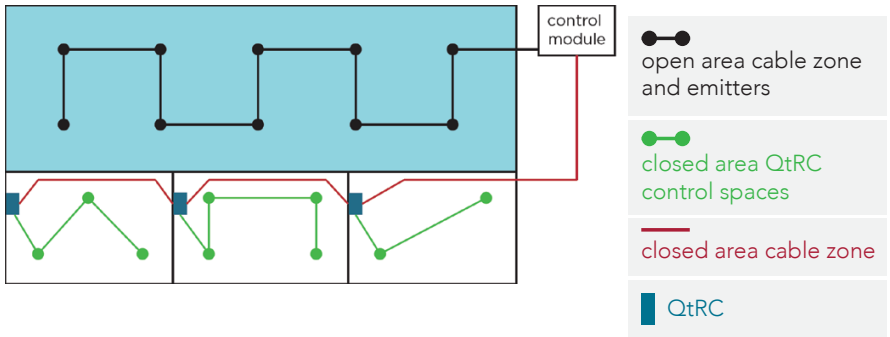

Figure 28. Possible layouts for Qt-RC3 controlled rooms

Qt X SYSTEM INFORMATION WORKSHEET

Homerun Output Destination Record

Output #	Run A (Qt X 300/600)	Emitter	Run B (Qt X 300/600)	Emitter
1				
2				
3				
4				
5				
6				

Qt X Controller Information

Controller Type / Serial Number: Qt X _____ / #_____

Hostname: _____

Mac Address (control / media): _____/_____

IP Address (control / media): _____/_____

Netmask (control / media): _____/_____

Location: _____

Admin Name / Password: _____/_____

Installation / Service

Company: _____

Installation Date: _____

Phone / Email: _____/_____

Notes: _____

_____

Volumes / Outputs	1	2	3	4	5	6	7	8
Assigned to Zone								
Masking Level								
Paging Level								
BGM* Level								
Zone Level Controls								
Masking Level								
Paging Level								
BGM* Level								
Notes								

*BGM = Background Music

Notes

Notes

Safety Information - Multi-language

The controllers are UL 2043 approved for installation into a plenum space.
DANGER: The AC/DC power supply provided with this product has not been evaluated to UL 2043 and must not be installed in a plenum space.

Les contrôleurs sont approuvés UL 2043 pour une installation dans un espace plénum.
DANGER: Le bloc d'alimentation CA / CC fourni avec ce produit n'a pas été évalué selon UL 2043 et ne doit pas être installé dans un espace plénum.

Los controladores están aprobados por UL 2043 para su instalación en un espacio plenum.
PELIGRO: La fuente de alimentación CA / CC proporcionada con este producto no se ha evaluado según UL 2043 y no debe instalarse en un espacio pleno.

Os controladores são aprovados pela UL 2043 para instalação em um espaço pleno.
PERIGO: A fonte de alimentação CA / CC fornecida com este produto não foi avaliada para UL 2043 e não deve ser instalada em um espaço pleno.

Die Steuerungen sind nach UL 2043 für den Einbau in einen Plenumraum zugelassen.
GEFAHR: Das mit diesem Produkt gelieferte AC / DC-Netzteil wurde nicht gemäß UL 2043 bewertet und darf nicht in einem Plenumraum installiert werden.

控制器已通过UL 2043认证，可安装在通风空间中。
危险：本产品随附的AC / DC电源尚未经过UL 2043评估，因此不得安装在通风空间内。

控制器已通過UL 2043認證，可安裝在通風空間中。
危險：本產品隨附的AC / DC電源尚未經過UL 2043評估，因此不得安裝在通風空間內。

컨트롤러는 플레 넘 공간에 설치하도록 UL 2043 승인을 받았습니다.
위험 :이 제품과 함께 제공된 AC / DC 전원 공급 장치는 UL 2043에 따라 평가되지 않았으므로 플레 넘 공간에 설치해서는 안됩니다.

وحدات التحكم معتمدة من UL 2043 للتركيب في مساحة مكتملة.
خطر: لم يتم تقييم مصدر طاقة التيار المتردد / التيار المستمر المتوفر مع هذه المنتج إلى UL 2043 ويجب عدم تثبيته في مكان مفتوح.

Контроллеры имеют сертификат UL 2043 для установки в статическом пространстве.
ОПАСНО: Источник питания переменного / постоянного тока, поставляемый с этим продуктом, не прошел оценку UL 2043 и не должен устанавливаться в камере статического давления.

בקרים מאושרים UL 2043 להתקנה בחלל אטום.

הנכס: חוכה קפס AC / DC המסופק עם הז רצום אל הרעוה ל- UL 2043 ואין להתקין אותו במבנה אטום.

CONTACT US

Email: support@biamp.com

Web: support.biamp.com

Warranty: biamp.com/legal/warranty-information

Note: *Every effort has been made to ensure that the information contained in this manual was complete and accurate at the time of printing. However, due to ongoing technical advances, changes or modifications may have occurred that are not covered in this manual. The latest version is available at www.biamp.com.*

Dante® is a registered trademark of Audinate

A: 9300 S.W. Gemini Drive Beaverton, OR 97008 USA

W: www.biamp.com

24NOV2021