Electro-Voice

Line Radiator Column Speaker

LRC-1060-B, LRC-1060-W, LRC-1100-B, LRC-1100-W

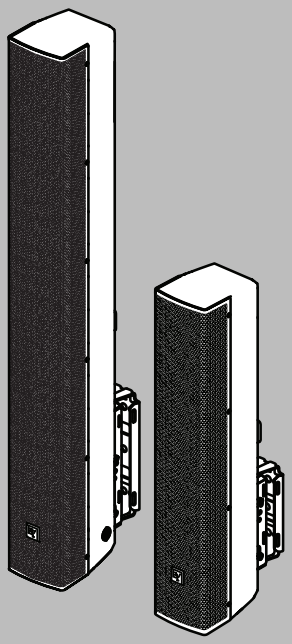

en Installation manual

Table of contents

1	**Safety**	**4**
1.1	Important safety instructions	**4**
1.2	Suspension	**4**
1.3	Precautions	**5**
1.4	Notices	**6**
1.5	Personal Protective Equipment (PPE)	**6**
1.6	Safety standards	**6**
2	**Introduction**	**7**
2.1	Applicable products	**7**
2.2	Parts included	**7**
2.3	System features	**8**
2.3.1	Integration and compatibility	**8**
3	**Installation**	**9**
3.1	Selecting the transformer tap	**9**
3.2	Using the multifunctional mounting bracket	**10**
3.3	Suspending the loudspeaker	**15**
3.4	Vertical coverage	**17**
3.5	Removing the logo	**18**
3.6	Painting the loudspeakers	**18**
4	**Wiring**	**20**
4.1	Recommended wire gauge	**22**
5	**Rigging strength ratings and safety factors**	**23**
6	**Electrical connection**	**24**
6.1	Low impedance connection	**24**
7	**Technical data**	**26**
7.1	LRC-1060	**26**
7.1.1	Technical data for EN54, type B installations	**29**
7.2	LRC-1100	**30**
7.2.1	Technical data for EN54, type B installations	**35**
8	**References**	**37**
8.1	Rigging (printed)	**37**
8.2	Mechanical engineering (printed)	**37**
8.3	Rigging (websites)	**37**

1 Safety

This is a professional product that should be installed, used and maintained by trained professional only.

1.1 Important safety instructions

1. Read these instructions.
2. Keep these instructions.
3. Heed all warnings.
4. Follow all instructions.
5. Clean only with damp or dry cloth. No harsh chemicals or solvents.
6. Do not install near any heat sources such as radiators, heat registers, stoves, or other apparatus (including amplifiers) that produce heat.

1.2 Suspension

Warning!
Read and fully understand the manual and all safety instructions before attempting to suspend this loudspeaker.
Qualified professionals must carry out suspension and installation.
Follow all applicable local laws and regulations. Incorrect or improper suspension could expose persons to serious injury or death.
Carefully inspect loudspeakers and associated hardware for defects or signs of damage before proceeding to suspend the speakers. Inspect all components at least once per year or as local laws and regulations require. Inspection shall include visual survey of all corners and load bearing surfaces for signs of cracking, water damage, de-lamination, or any other condition that may decrease the strength of the loudspeaker enclosure. If any parts are damaged or suspect, or if there is any doubt as to the proper functioning and safety of the items, stop using them immediately.
It is the responsibility of the person installing the assembly to make sure the wall, ceiling, structure, and any attachments are capable of supporting all objects suspended overhead.
Never modify Electro-Voice loudspeakers or rigging components or use a partial assembly of rigging components.
Only use rigging components with the loudspeaker models they are designed for. Any hardware not provided by Electro-Voice is the responsibility of others.
Electro-Voice assumes no liability for any damage or personal injury resulting from improper use, installation, or operation of the product.

Warning!
Use the included hardware and fasteners as shown on this manual. Do not substitute any components or fasteners for provided parts. Contact your customer service representative for genuine replacement parts.

Warning!
Always attach a secondary support mechanism with correctly load rated equipment when speakers are suspended overhead.
In case of failure of the main attachment, the speaker must be prevented from falling without dropping or swinging by a significant amount.

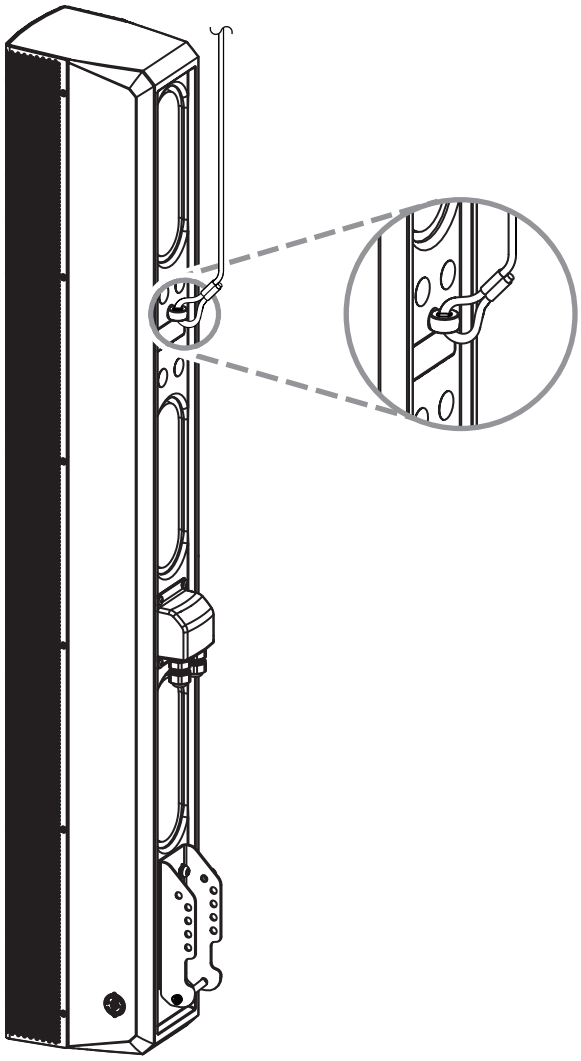

Warning!
Any outdoor use must take into account environment effects such as wind loads, snow or any other condition that can add external forces to the loudspeaker. Always use a qualified professional to certify outdoor use for safety to local environmental conditions.

Warning!
Do not install these loudspeaker systems in high chlorine environments, such as swimming pools.

1.3 Precautions

– These Electro-Voice loudspeakers were designed for use in an environment with ambient temperatures between -20°C (-4°F) and +50°C (122°F).

– Electro-Voice loudspeakers are easily capable of generating very high sound pressure levels. Caution should be taken to avoid prolonged exposure to sound pressure levels exceeding 90 dB. To prevent hearing damage do not listen at high volume levels for long periods.

1.4 Notices

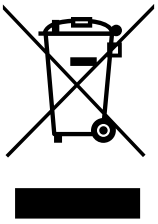

Old electrical and electronic appliances

Electrical or electronic devices that are no longer serviceable must be collected separately and sent for environmentally compatible recycling (in accordance with the European Waste Electrical and Electronic Equipment Directive).

To dispose of old electrical or electronic devices, you should use the return and collection systems put in place in the country concerned.

Copyright and disclaimer

All rights reserved. All content including specifications, data, and illustrations in this manual are subject to change without prior notice.

1.5 Personal Protective Equipment (PPE)

Warning!

Use safety glasses, a safety helmet, safety boots, and safety gloves at all times during installation.

Failure to do so can result in injury or death.

1.6 Safety standards

Bosch Security Systems Inc. LLC

130 Perinton Pkwy, Fairport, NY 14450 USA

Confirms that this product has been designed and validated to meet or exceed the relevant sections of:

- CE
- RoHS
- EN 62368-1:2018 (Low Voltage Directive)
- IEC 60529:1989/AMD2:2013/COR1:2019 (IP Rating)
- EN54-24 (LRC-1060 and LRC-1100)
- UKCA

2 Introduction

LRC Line Radiator Column is a line of passive column loudspeakers engineered specifically for installation.
LRC loudspeakers are simple, practical, and easy to install, offering a sleek, neutral industrial design that blends into a wide range of settings.
LRC loudspeakers can play a role in any install as main speakers, support speakers, and foreground and background speakers.
LRC-1060 and LRC-1100 include a pre-installed internal transformer for connection to 70- or 100-volt lines. These models include EV’s patented Automatic Saturation Compensation (ASC) technology, which preserves low frequency response and protects system electronics from improper electrical loads when the transformer is engaged - regardless of the number of speakers connected to the line.
An integral part of LRC offering is the mounting bracket that ships with each loudspeaker. It has been carefully designed to cover most mounting situations, whether the column needs to be positioned with no tilt and as close to the wall as possible, tilted downward, inverted for up-tilt, panned to either side, or aimed with a combination of pan and tilt.
LRC Line Radiator Columns are engineered for use on any system using the recommended high-pass filter, but deliver their best performance when paired with Dynacord DSP matrix processors and amplifiers. These provide dedicated presets which ensure the optimal balance of sound quality, output, and system protection. All models are available in black and white and are suitable for indoor or outdoor use.
LRC-1060 and LRC-1100 are EN54-24 certified, and all models are supported by EASE/EASE Focus3, PREVIEW Loudspeaker Software and by SONICUE System Software, as well as AFMG's EASE and EASE Focus3 software.

2.1 Applicable products

This document is applicable to these products:
- LRC-1060-B Column Speaker 0.6m blk
- LRC-1060-W Column Speaker 0.6m wht
- LRC-1100-B Column Speaker 1m blk
- LRC-1100-W Column Speaker 1m wht

2.2 Parts included

Make sure that all parts are included and not damaged. If the packaging or any parts are damaged, contact your shipper. If any parts are missing, contact your Sales or Customer Service Representative.

Quantity	Component
1	Column speaker
1	SwifTilt Pan-Tilt mounting bracket and fixings
1	Weather cover for dual gland-nut
1	Gland nut plug
1	Dual-ended Allen key
1	M8 eyebolt (pre-installed)
1	Warranty card

Quantity	Component
1	Installation manual

2.3 System features

- **Vertical Pattern Control**
  The compact LRC-1060 column speaker has a fixed 20° symmetrical vertical pattern, while the larger LRC-1100 lets the user select a narrow or wide (20°/40°) vertical pattern. Acoustic down-tilt, unique to the LRC-1100, focuses energy toward the audience at a 5° downward angle when installed fully vertical.
- **SwifTilt Pan-Tilt mounting bracket**
  Flexible, multi-mode mounting bracket (patent pending) included with loudspeaker. Column installs as close to the mounting surface as possible for better appearance and acoustics. Unique bracket assembly supports most mounting situations. Rear M8 inserts provide for both secondary safety attachment and cable suspension using properly rated hardware.
- **Built-in transformers**
  Direct drive speakers in low impedance mode, or connect to 70-/100-volt lines. Patented Automatic Saturation Compensation (ASC) preserves bass and protects electronics.
- **Removable recessed Euroblock connector**
  Low profile Euroblock connector is recessed inside the input cup and has a removable plug that can be prewired.
- **Amplifier compatibility**
  Optimized performance when used with Dynacord electronics and EV speaker settings. Also delivers best-in-class sound when used with amplifiers from other brands. Refer to product datasheets for specific amplifier matching specifications.
- **Weatherization and certification**
  Weatherized for full exposure, including IP56c rating, and EN54-24 Type B certified for all-weather applications.
- **Subwoofers**
  Compatible with all EV install subwoofers, including EVC-1181S and EVID-S10.1D.

2.3.1 Integration and compatibility

All LRC models deliver excellent sound quality with third-party amplifiers, but only Dynacord amplifiers are able to implement speaker settings that optimize acoustic performance and provide the optional “Voice” mode.
LRC columns are also added to the EV Loudspeaker database so that installers can predict their coverage in PREVIEW Loudspeaker Software, and control LRC/Dynacord combinations in SONICUE System Software.
Electro-Voice also provides files to model LRC loudspeakers in EASE, EASE Focus, and BIM Software, as well as CLF files, allowing LRC to be included in models from most leading software platforms in the market today.

3 Installation

Notice!
The weather cover must be used in all EN54-24 compliant installations.
This speaker cannot be painted when used in EN54-24 compliant installations.

3.1 Selecting the transformer tap

LRC-1060 and LRC-1100 include a pre-installed internal transformer for connection to 70- or 100-volt lines. These models include EV's patented Automatic Saturation Compensation (ASC) technology, which preserves low frequency response and protects system electronics from improper electrical loads when the transformer is engaged - regardless of the number of speakers connected to the line.
Before mounting the speaker to the bracket:

- Using the torx end of the dual-ended Allen key included, select the proper transformer tap setting for your installation.
  The wattage selector switch is located at the bottom side of the loudspeaker.

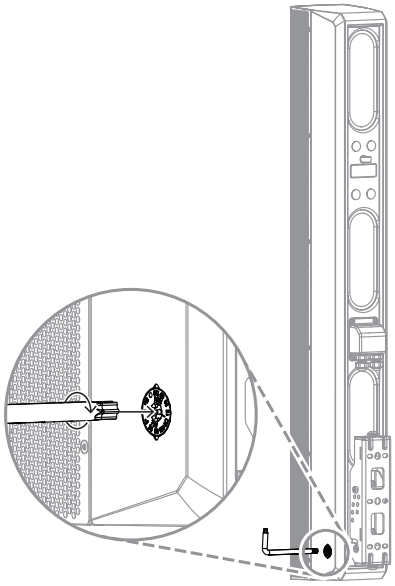

LRC-1060 transformer specifications

Tap setting	Impedance
8-Ohm direct coupled	8 Ω
70 V / 60 W	83 Ω
70 V / 30 W 100 V / 60 W	167 Ω
70 V / 15 W 100 V / 30 W	333 Ω
70 V / 8 W 100 V / 15 W	667 Ω

Tap setting	Impedance
70 V / 4 W 100 V / 8 W	1333 Ω

LRC-1100 transformer specifications

Tap setting	Impedance
8-Ohm direct coupled	8 Ω
70 V / 120 W	42 Ω
70 V / 60 W 100 V / 120 W	83 Ω
70 V / 30 W 100 V / 60 W	167 Ω
70 V / 15 W 100 V / 30 W	333 Ω
70 V / 8 W 100 V / 15 W	667 Ω

3.2 Using the multifunctional mounting bracket

LRC columns include a versatile, multi-mode mounting bracket that comes in three pieces:

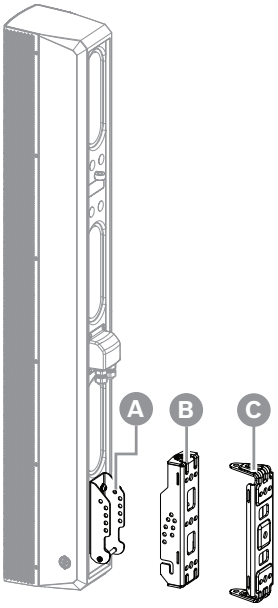

A	Column bracket attached to the bottom part of the loudspeaker
B	Tilt bracket to mount the loudspeaker on the wall
C	Pan bracket to pan the loudspeaker left and right

Caution!
It is the installer's responsibility to determine and use the proper mounting hardware for the wall construction type.
Disregarding this caution could result in damage to the product and personal injuries may occur.

Mounting the loudspeaker on the wall without panning

To mount the loudspeaker on the wall:

1. Mount the tilt bracket (B) on the wall.
2. Slot the hinge pin on the loudspeaker bracket into the channel on the tilt bracket (B).
3. Slide the hinge pin backwards and down until it rests in the bottom of the slot on the tilt bracket (B).

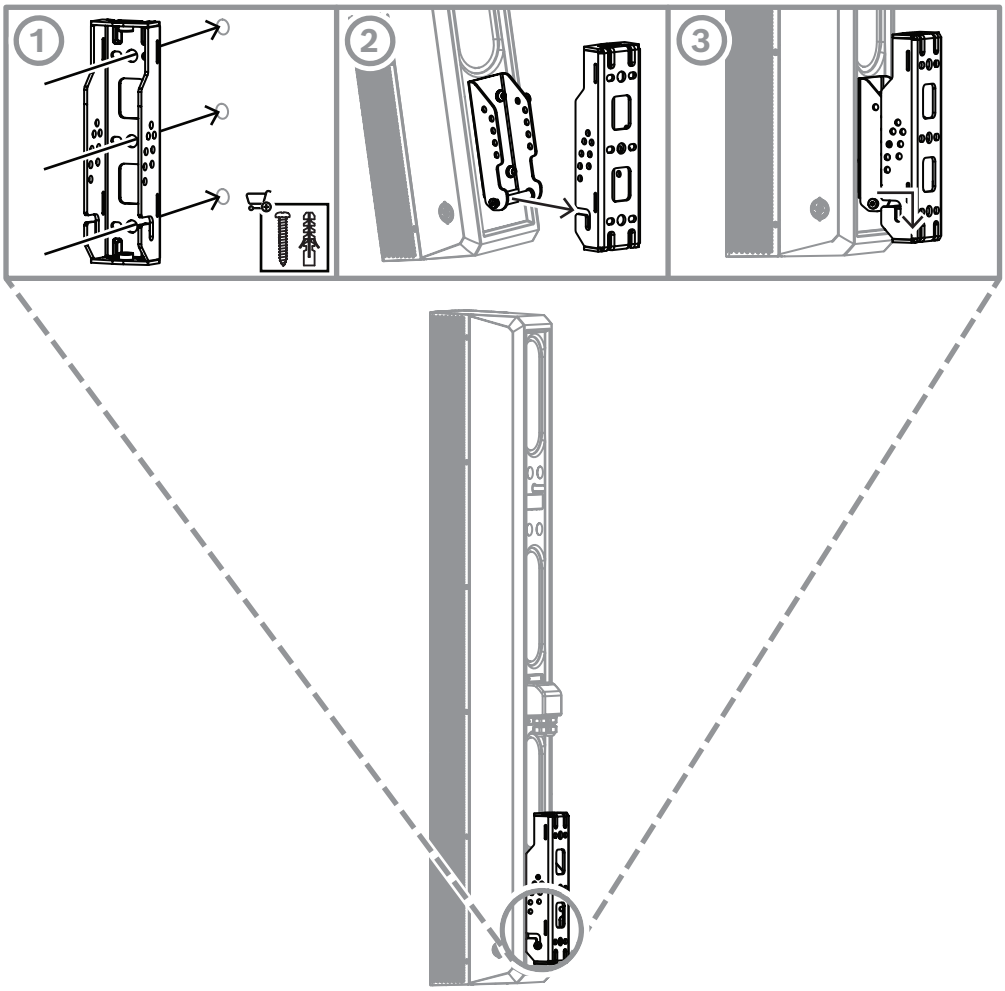

Figure 3.1: Installation without panning

Down tilting the loudspeaker

The LRC column bracket has holes that match predefined down-tilt angles: 0, 2.5, 5, 7.5, 10, 15, 20 and 25 degrees.
All down-tilt angles are supported by the lower (default) bracket position. Moving the mounting bracket to the upper position restricts maximum down-tilt to -7,5 degrees.

To determine the down-tilt angle:
1. Insert the tilt screw included in the matching hole.
2. Fully tighten the included nut onto the provided bolt using the included hex tool and a 10 mm wrench or socket (not provided).

Notice!
The bracket also supports up to 25° of up-tilt when both halves of the bracket are inverted. Take special care when using this configuration, as the L-shaped channel will not hold the loudspeaker securely until the tilt screw has been fully installed.

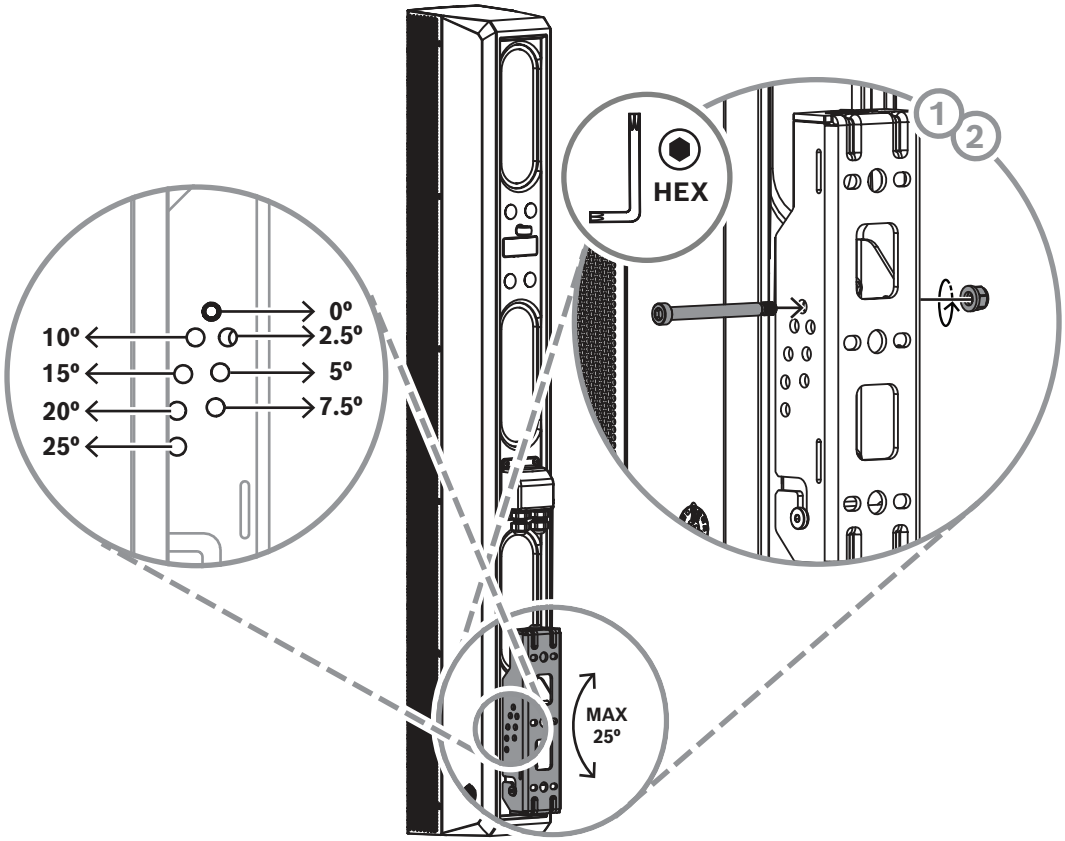

Panning the loudspeaker

It is possible to pan the loudspeaker up to 80° left or right by using the pan bracket.

To pan the loudspeaker left and right:

1. Mount the pan bracket on the wall.
2. Using the supplied screws and the Allen key included, screw the wall bracket and the pan bracket together on the top and on the bottom.
3. Adjust the pan angle.
   Dash marks on the top of the wall bracket determine the panning angle in 10° increments.

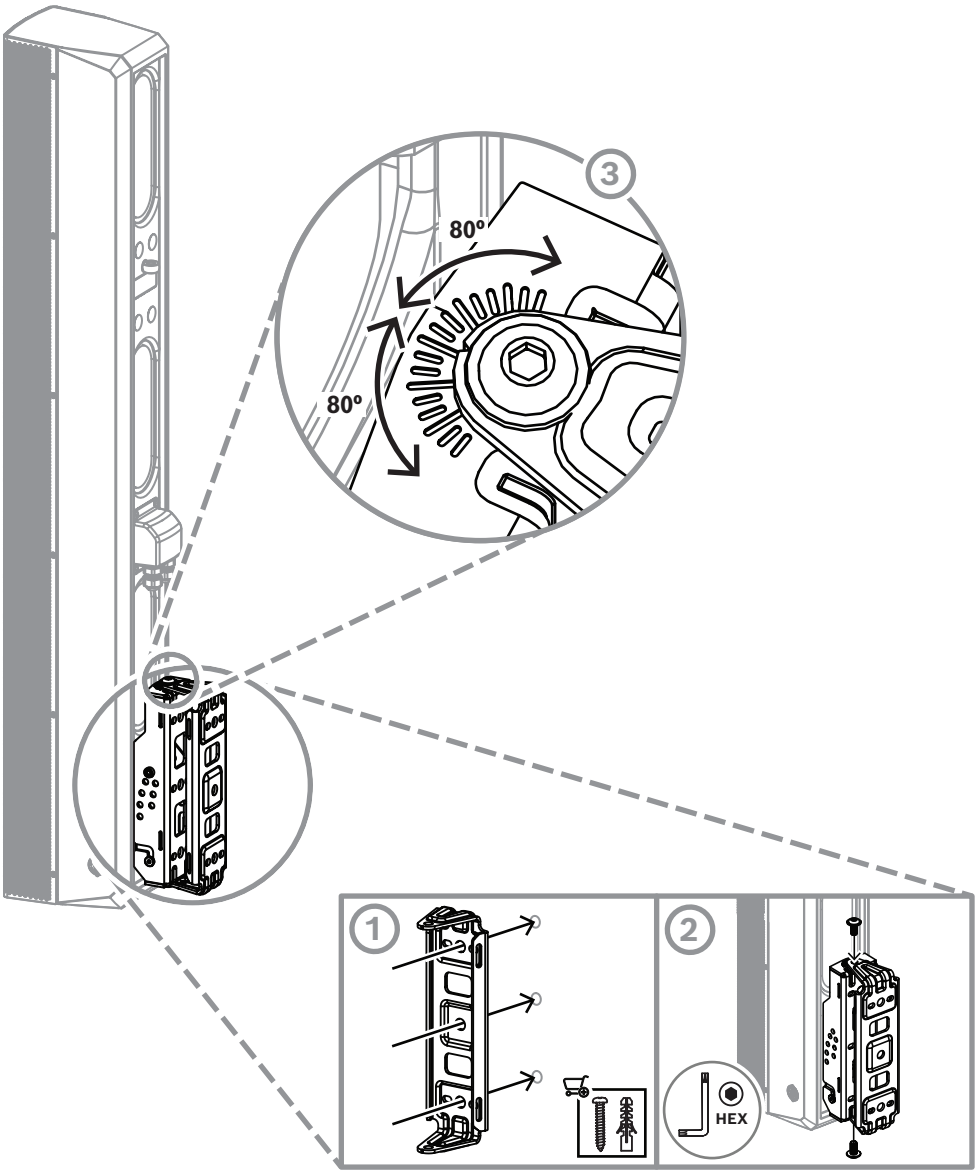

Moving the mounting bracket location

It is possible to move the mounting bracket location to the upper part of the loudspeaker. Note that the upper bracket position will limit maximum down-tilt to -7.5 degrees.

To move the bracket location:

1. Remove the safety point eyebolt and M6 screw covers.
2. Unscrew the column bracket from the bottom of the loudspeaker.
3. Screw the column bracket to the upper part of the loudspeaker.
4. Reinstall the safety eyebolt and M6 covers to the vacant lower bracket position.

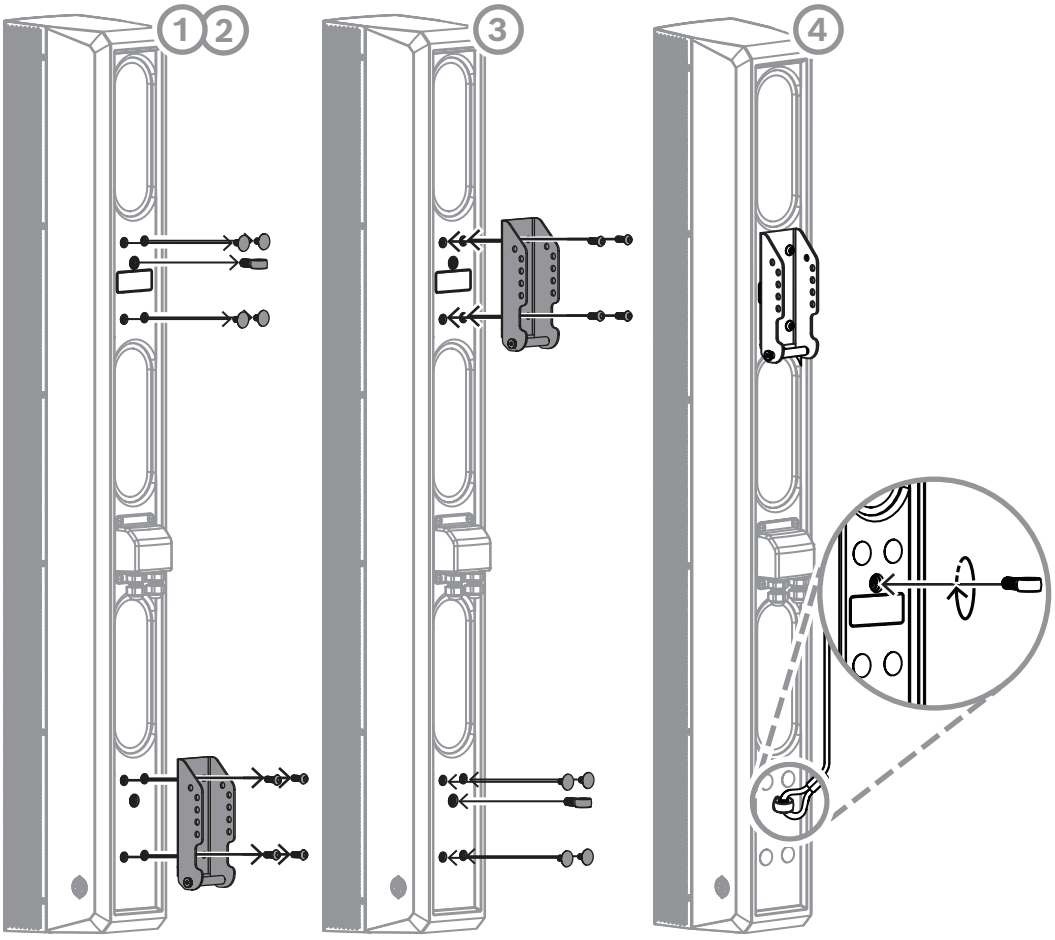

3.3 Suspending the loudspeaker

Mounting the loudspeaker to a pole

It is possible to mount the loudspeaker to a pole using the two-piece or three-piece mounting bracket.

To mount the loudspeaker to a pole:

– Insert mounting straps through the top and bottom slots of the wall bracket or pan bracket.

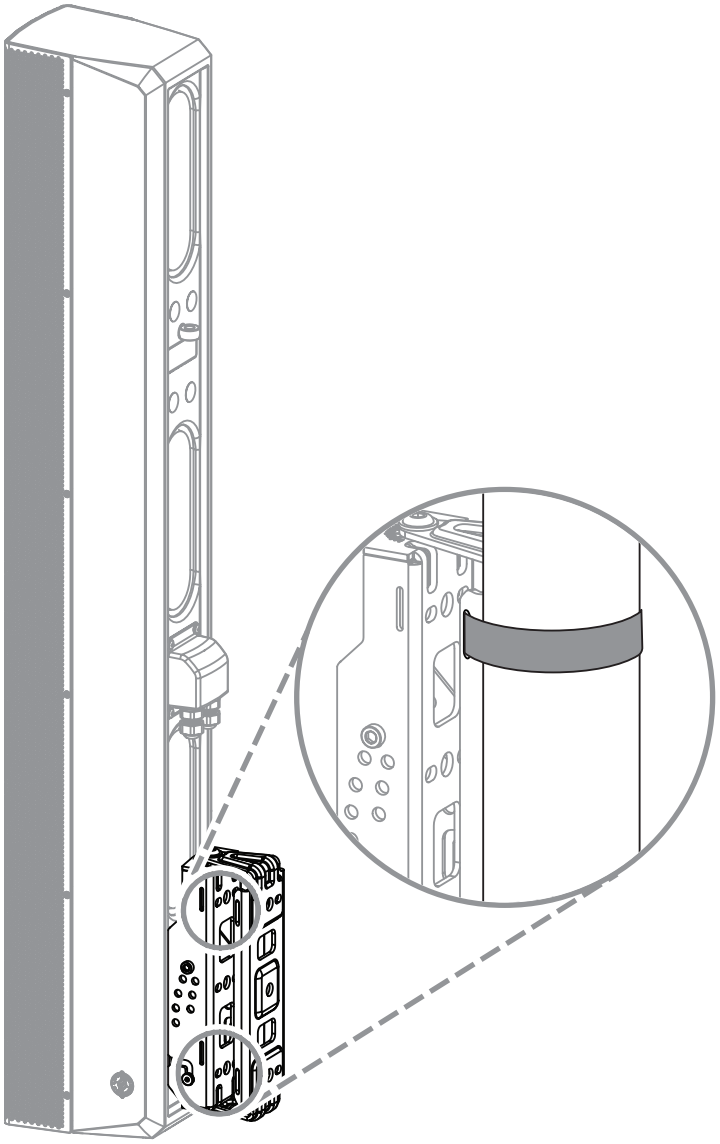

Warning!
Use appropriately rated mounting straps.

Flying the loudspeaker

It is possible to fly the loudspeaker using M8 eyebolts.

Notice!
Electro-Voice only provides one M8 eyebolt. Any additional hardware used for suspending the loudspeaker should be properly rated for the intended load and environment.

To fly the loudspeaker:
1. Unscrew the column bracket.
2. Using the safety points holes as suspension points, attach M8 eyebolts to the suspension points.

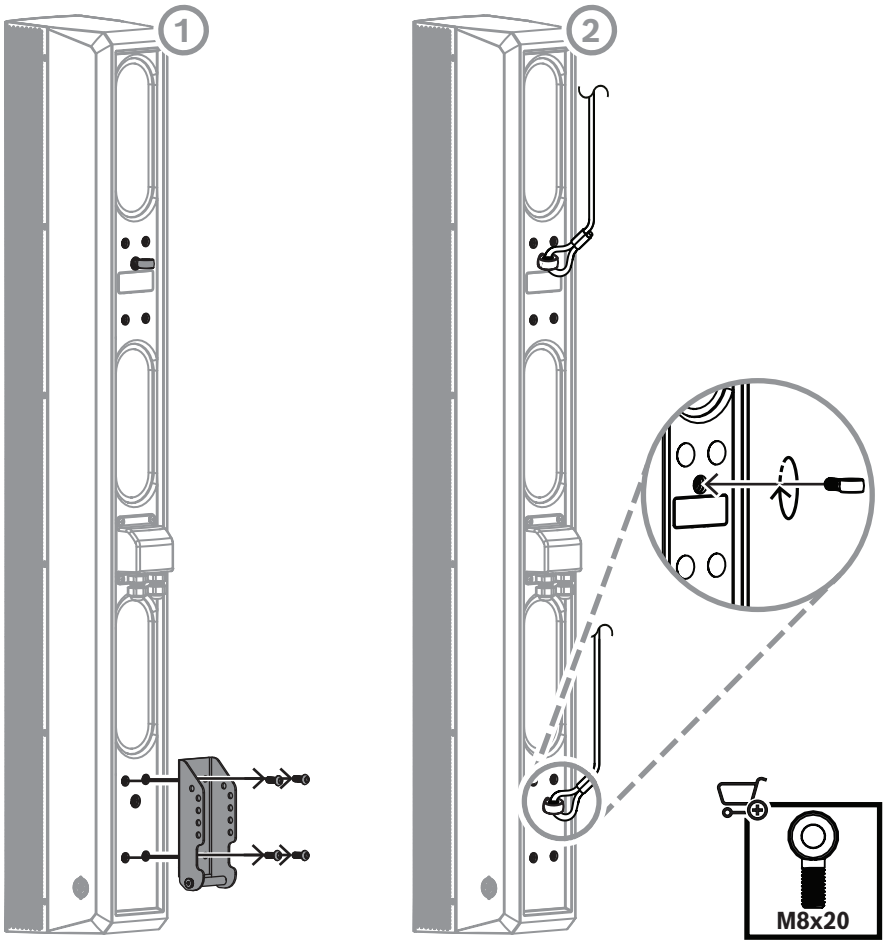

All hardware supplied by the user must be rated for overhead lifting to suspend the loudspeaker system.

3.4 Vertical coverage

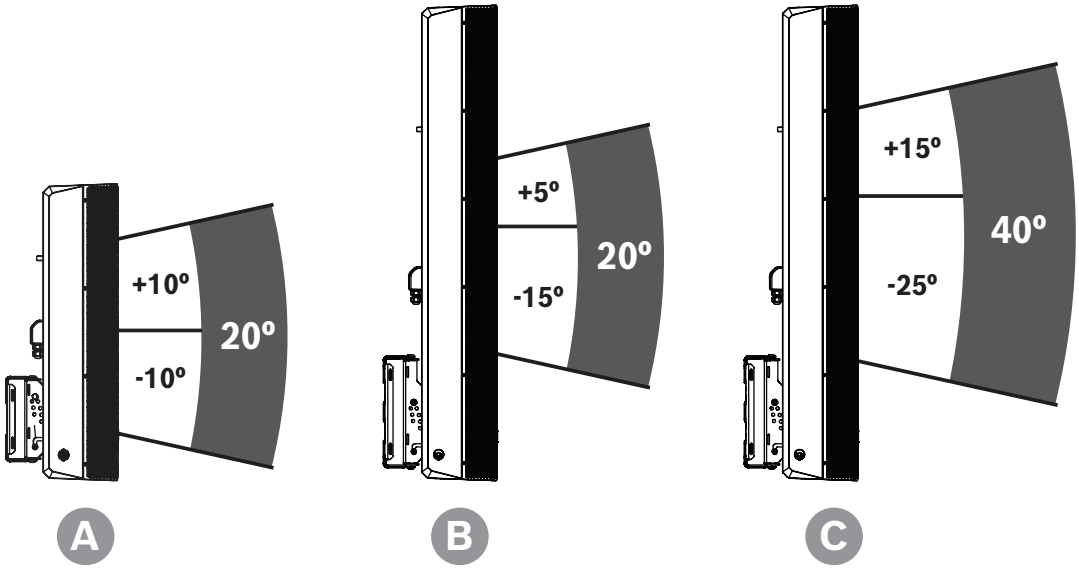

A	LRC-1060 vertical coverage Beam center perpendicular to front speaker grille
B	LRC-1100 vertical coverage (narrow) Beam center offset -5° relative to horizontal
C	LRC-1100 vertical coverage (wide) Beam center offset -5° relative to horizontal

The compact LRC-1060 column speaker has a fixed 20° symmetrical vertical pattern, while the larger LRC-1100 lets the user select a narrow or wide vertical pattern with a downward tilt. The narrow setting covers a nominal 20° vertical angle and the wide setting covers a nominal vertical angle of 40°.

To set the vertical coverage on LRC-1060:

- Using the torx end of the dual-ended Allen key included, turn the wide/narrow tap at the bottom side of the loudspeaker.

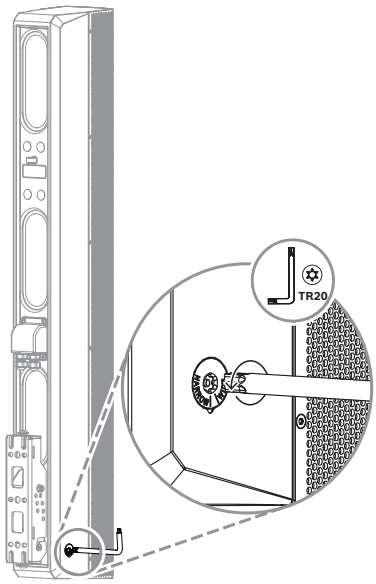

3.5 Removing the logo

The loudspeakers have a low-contrast version of the EV logo that is removable by the installer, without leaving any cosmetic artifacts on the grill. Use a soft-edged tool to avoid scratching the grille or removing paint during logo removal.

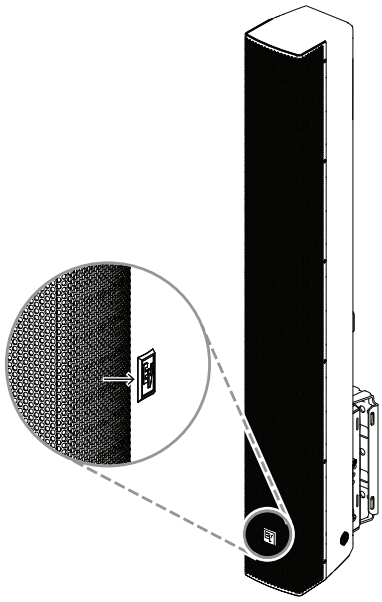

3.6 Painting the loudspeakers

LRC loudspeakers are made of high-impact ABS, which accepts a wide variety of paints.

To paint the loudspeakers:

1. Remove the grille and mask the baffle.
2. Clean the cabinet and grille by rubbing the speaker with a lightly dampened cloth.

Warning!
Do not use abrasives such as sandpaper or steel wool. Never use gasoline, kerosene, acetone, MEK, paint thinner, harsh detergents, or other chemicals, as these agents may cause permanent damage to the enclosure.

3. Apply latex or enamel paint.
   Spraying is recommended.

Notice!
Painting the grille
Painting the grille requires spray painting. If the grille is rolled or brush painted, the mesh may become clogged with paint and poor sound quality may result.

4 Wiring

Warning!
Risk of electrical shock
Before connecting the loudspeaker, verify that the connection to the amplifier is disconnected, or the amplifier is disconnected from mains power. Failure to do so may result in voltage present at the loudspeaker connection sufficient to cause an electrical shock.

To wire the speaker with two cables:

1. Remove the Euroblock connector.

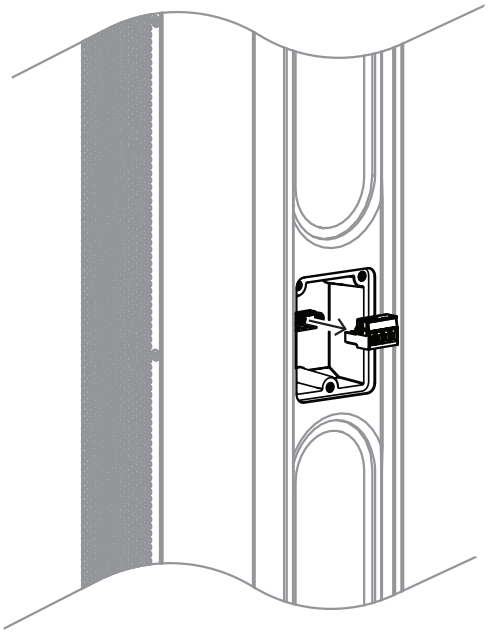

2. Loosen both gland nuts of the weather cover.

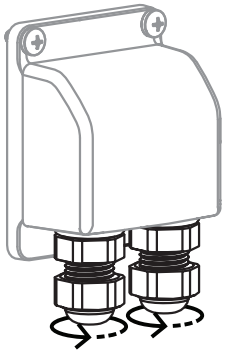

3. Push the wire through the gland nuts.
4. Wire the Euroblock connector.
   Refer to *Electrical connection, page 24* for wiring details.

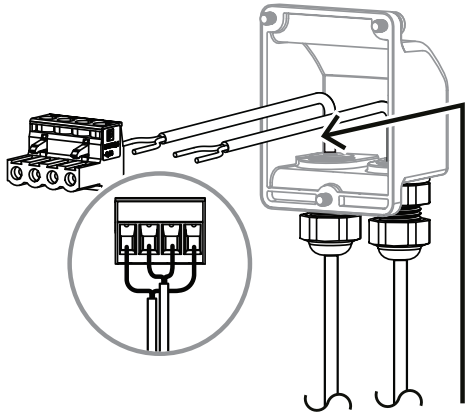

5. Mount the loudspeaker as shown in *Installation, page 9*.
6. Plug the Euroblock connector into the speaker.
7. Line the weather cover up with the back of the input cup, pulling excess wire out through the gland nuts.

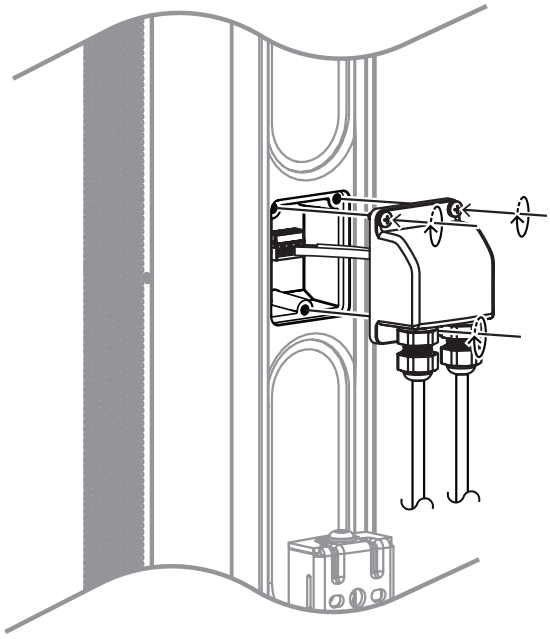

8. Tighten all screws to secure the weather cover.
   Ensure the weather cover is secure.
9. Tighten the gland nuts.

To wire the speaker with one cable:

1. Remove the screws of the weather cover.
2. Remove the Euroblock connector.
3. Loosen one of the gland nuts of the weather cover.
4. Push the wire through the gland nut.
5. Wire and install the Euroblock connector.

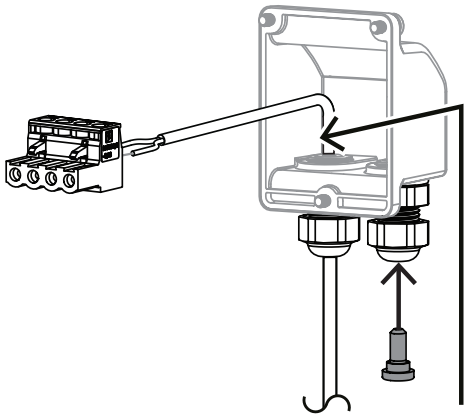

6. Line the weather cover up with the back of the input cup, pulling excess wire out through the gland nuts.
7. Tighten the remaining gland nut.

4.1 Recommended wire gauge

The wiring method shall be in accordance with all applicable local laws and electrical codes.

Maximum recommended wiring length (0.5 dB loss)			
	100 Watt	40 Watt	10 Watt
18 AWG (1 mm^2)	230 ft	560 ft	2300 ft
16 AWG (1.5 mm^2)	360 ft	900 ft	3600 ft
14 AWG (2.5 mm^2)	560 ft	1400 ft	5600 ft
12 AWG (4.0 mm^2)	910 ft	2300 ft	9100 ft

5 Rigging strength ratings and safety factors

Warning!
Never exceed the limitations or maximum recommended working load for Electro-Voice loudspeakers.
Disregarding this warning could result in serious injury or death.

Eyebolts can be used to suspend individual loudspeakers when attached through the integral M8 attachment points. Orient the suspending cable so that it hangs within 30° of the straight-up position in the plane of pull, and within 15° against the plane of pull.

6 Electrical connection

6.1 Low impedance connection

All LRC full-range systems are passive, which means a single input provides full-range audio to the entire loudspeaker. In addition, the internal passive network tailors the frequency response and level of each individual driver so that the overall frequency response of the loudspeaker is as even as possible over its intended range of operation. There is no bi-amp option for LRC full-range loudspeakers.

Figure 6.1: LRC input panel

The screw terminals on the input panel will accept wire gauges as large as AWG 12. There are two pairs of terminals labeled + and -. A speaker-level audio signal should be connected to one of these +/- pairs. The other +/- pair can be used to connect one or more additional loudspeakers in parallel, as long as the combined load impedance does not drop too low for the amplifier to operate reliably.

Optional speaker processing

Once an LRC loudspeaker is installed in a venue, a Digital Signal Processor (DSP) will typically be used to adjust the in-room frequency response. In addition, the DSP should be used to provide the high-pass filters recommended to protect LRC systems against overdrive at frequencies below their operating range. Failure to do so could damage the low-frequency drivers if the system is subjected to high-level signals below its operating range.

Models	Recommended high-pass frequency (minimum)
LRC-1060	70 Hz (24dB/oct Butterworth)
LRC-1100	70 Hz (24dB/oct Butterworth)

Table 6.1: Recommended high-pass filter frequencies for infrasonic protection of LRC systems

The recommended high-pass filter can be implemented in a stand-alone DSP loudspeaker controller or in the processing section of a DSP-enabled amplifier. L Series and C Series amplifiers from Dynacord are recommended for use with LRC loudspeakers because they

can also implement model-specific processing that optimizes loudspeaker performance. LRC loudspeaker settings can also be implemented in any IRIS-Net compatible digital signal processor.

7 Technical data

7.1 LRC-1060

Frequency range (-10 dB)[1]	70 Hz - 15000 Hz
Maximum SPL[2]	122 dB
Axial sensitivity[3]	90 dB SPL 1W/1m
Coverage angle HxV[4]	130° x 20°
Power handling (continuous)[5]	100 W
Power handling (program)[6]	200 W
Peak input voltage (Lo-Z)	80 V
Nominal impedance (Lo-Z)	8 Ω
Minimum impedance (Lo-Z)	8.5 Ω at 400 Hz
Recommended high-pass	≥70 Hz Butterworth, 24 dB/oct
Transformer taps 70 V line	60 W; 30 W; 15 W; 8 W; 4 W
Transformer taps 100 V line	60 W; 30 W; 15 W; 8 W
Transducer (quantity) size	(6) 2.5 in active drivers (2) 2.5 in passive radiators
Connector type	4-pin Euroblock Input + Pass through
Wire size	12AWG (maximum)
Suspension points	(2) M8
Mounting	SwifTilt Multi-angle Tilt + Pan Bracket
Maximum horizontal pan angle	+/- 80° (at all down-tilt angles)
Vertical down-tilt angles[7]	0°, 2.5°, 5°, 7.5°, 10°, 15°, 20°, 25°
IP rating	FW (outdoor full exposure), IP56c
Color	RAL 9004 Signal black / RAL 9003 Signal white
Dimensions (H x W x D)	22.83 in x 4.13 in x 5.67 in
Dimensions (H x W x D)	580 mm x 105 mm x 144 mm
Weight	9.70 lb
Weight	4.40 kg
Shipping weight	16.31 lb
Shipping weight	7.4 kg

Included hardware	Tilt bracket Pan bracket Gland nut weather cover Dual-ended Allen/TR20 key M8x20 mm eyebolt (pre-installed)

[1]-10 dB from rated sensitivity. Measured with Music preset in half-space (wall-mounted) position
[2]1 m on axis, half-space, 12 dB crest factor pink noise with Music preset (measured)
[3]Unprocessed
[4]Vertical coverage unprocessed. 2 kHz - 13 kHz
[5]100 hrs continuous EN54-24 noise, Lo-Z
[6]20 ms average, Lo-Z
[7]Using included surface-mount bracket

Frequency response

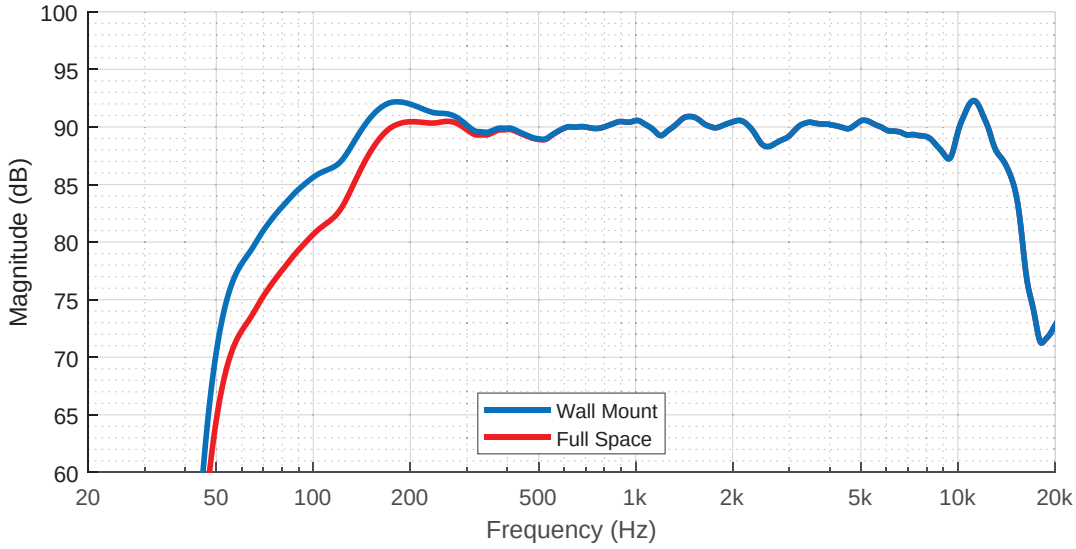

Impedance response

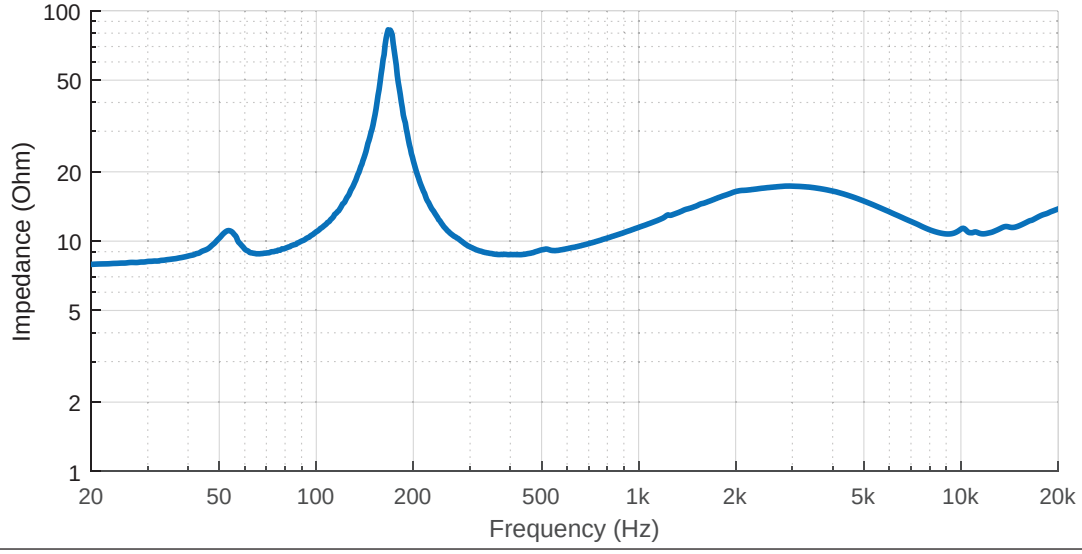

Horizontal spatial frequency response

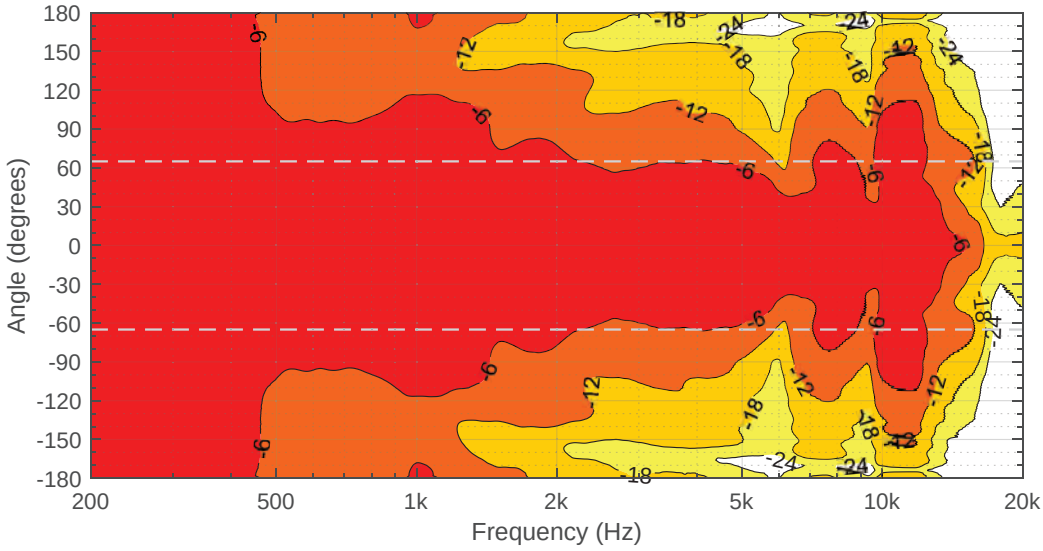

Vertical spatial frequency response

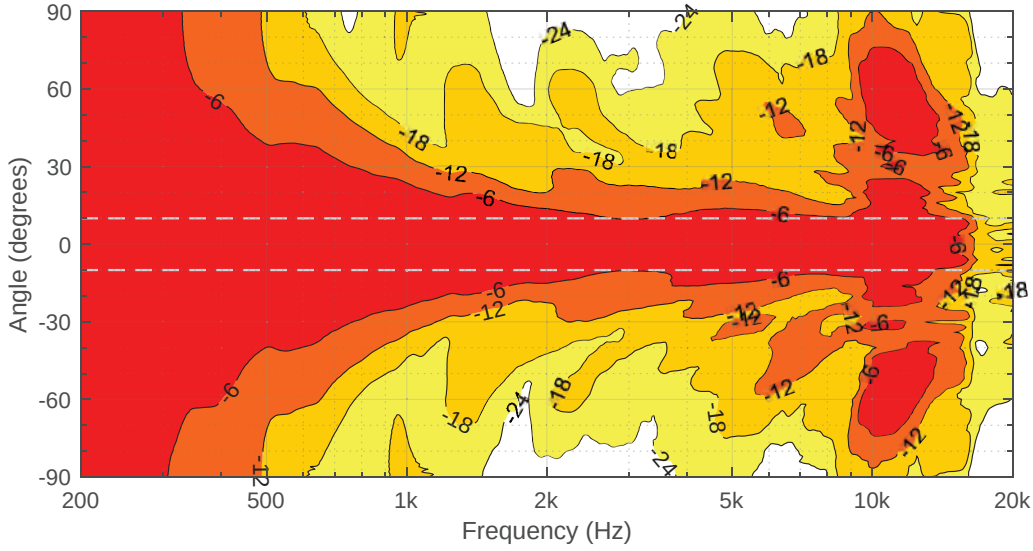

Dimensions

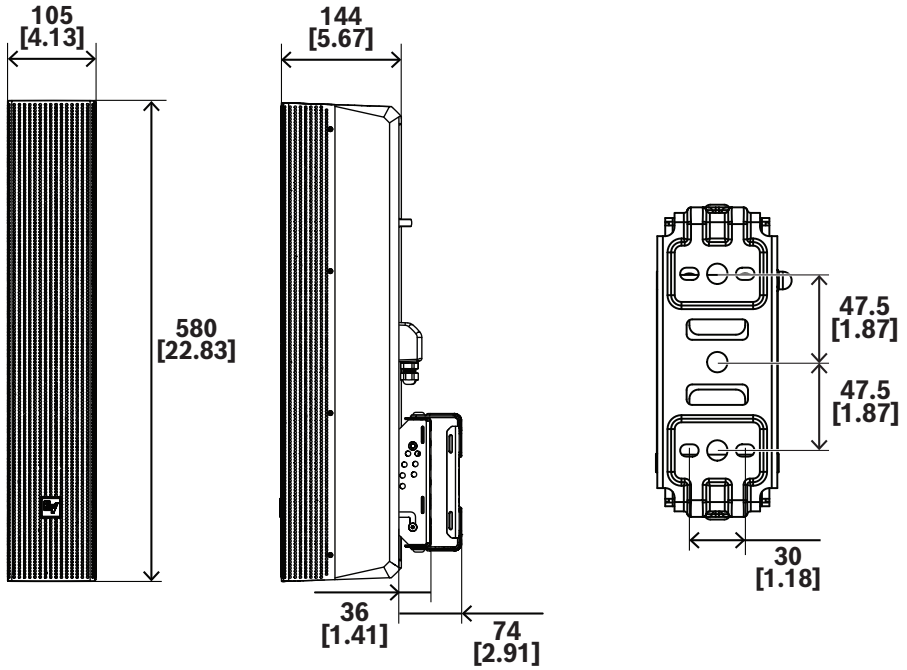

7.1.1 Technical data for EN54, type B installations

Data measured and expressed as per EN54-24 requirements.

Acoustic coverage

Frequency	Frequency response / Reproducibility	Horizontal Coverage	Vertical Coverage
Hz	dB/SPL	Degrees	Degrees
500	64	360	115
630	65		
800	64		
1000	62	220	50
1250	64		
1600	66		
2000	64	150	30
2500	62		
3150	65		
4000	65	110	20
5000	65		
6300	64		
8000	62		

Table 7.1: Measured full-space at 4 m, signal at 1 W of 1/3 octave band filtered pink noise

Sensitivity and max SPL

Sensitivity per EN54-24 standard (SPL 1 W/4 m):	74 dB
Max measured SPL per EN54-24 standard:	94 dB

Impedance

Tap setting	Impedance
8-Ohm direct coupled	8 Ω
70 V / 60 W	83 Ω
70 V / 30 W 100 V / 60 W	167 Ω
70 V / 15 W 100 V / 30 W	333 Ω
70 V / 8 W 100 V / 15 W	667 Ω
70 V / 4 W 100 V / 8 W	1333 Ω

7.2 LRC-1100

Frequency range (-10 dB)[1]	65 Hz - 14000 Hz
Maximum SPL[2]	126 dB narrow 123 dB wide
Axial sensitivity[3]	93 dB SPL 1W/1m narrow 91 dB SPL 1W/1m wide
Acoustic down-tilt (relative to horizontal)	-5°
Coverage angle HxV[4]	130 x 20 (narrow) / 40° (wide)
Power handling (continuous) (Lo-Z)[5]	200 W
Power handling (program) (Lo-Z)[6]	400 W
Peak input voltage (Lo-Z)	115 V
Nominal impedance (Lo-Z)	8 Ω
Minimum impedance (Lo-Z)	7.1 Ω at 8 kHz
Recommended high pass	≥70 Hz Butterworth 24 dB/oct

Transformer taps 70 V line	120 W; 60 W; 30 W; 15 W; 8 W
Transformer taps 100 V line	120 W; 60 W; 30 W; 15 W
Transducer (quantity) size	(12) 2.5 in active drivers (3) 2.5 in and 6.5 in passive radiators
Connector type	4-pin Euroblock Input + Pass through
Wire size	12AWG (maximum)
Suspension points	(2) M8
Mounting	SwifTilt Multi-angle Tilt + Pan Bracket
Maximum horizontal pan angle	±80° at all down-tilt angles
Vertical down-tilt angles[7]	0°, 2.5°, 5°, 7.5°, 10°, 15°, 20°, 25°
IP rating	FW (outdoor full exposure), IP56c
Color	RAL 9004 Signal black / RAL 9003 Signal white
Dimensions (H x W x D)	37.40 in x 4.33 in x 5.91 in
Dimensions (H x W x D)	950 mm x 110 mm x 150 mm
Weight	16.8 lb
Weight	7.6 kg
Shipping weight	27.78 lb
Shipping weight	12.6 kg
Included hardware	Tilt bracket Pan bracket Gland nut weather cover Dual-ended Allen key M8x20 mm eyebolt (pre-installed)

[1]-10 dB from rated sensitivity. Measured with Music preset in half-space (wall-mounted) position
[2]1 m on axis, half-space, 12 dB crest factor pink noise with Music preset (measured)
[3]Unprocessed. 500 Hz - 12 kHz
[4]Vertical coverage unprocessed. Narrow: 1 kHz - 13 kHz. Wide: 650 Hz - 12 kHz
[5]100 hrs continuous EN54-24 noise, Lo-Z
[6]20 ms average, Lo-Z
[7]Using included surface-mount bracket

Frequency response

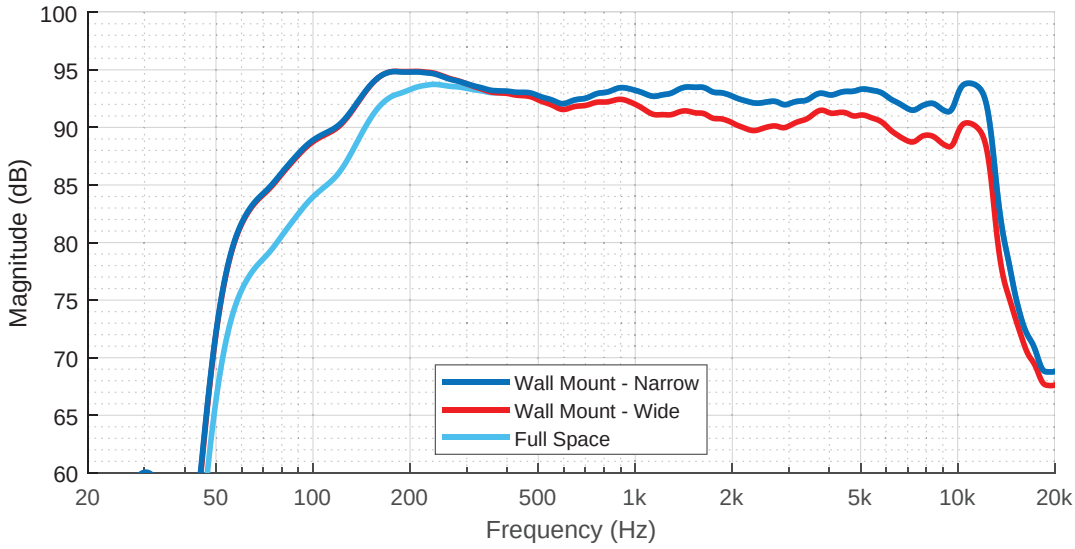

Impedance response

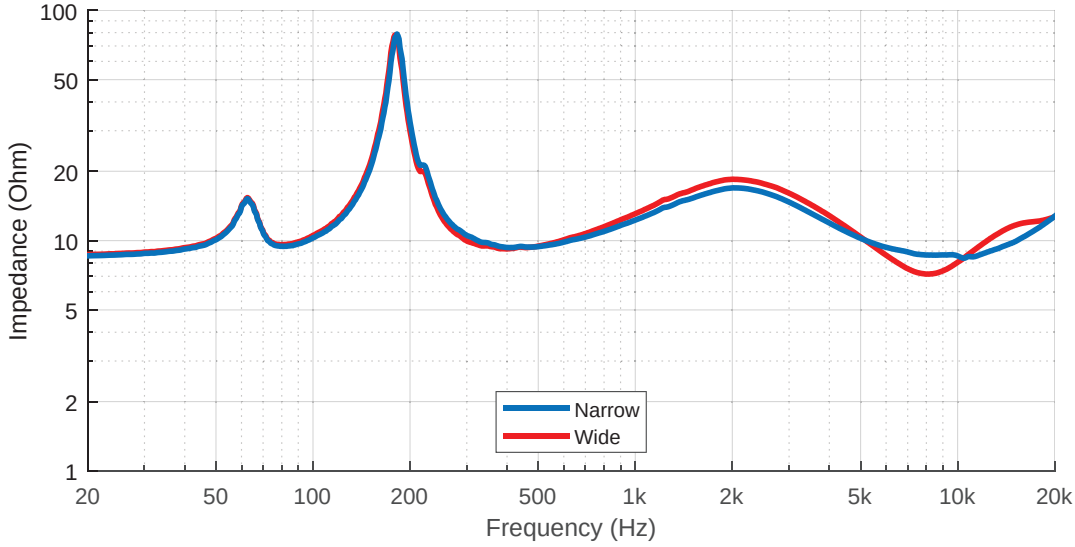

Horizontal spatial frequency response

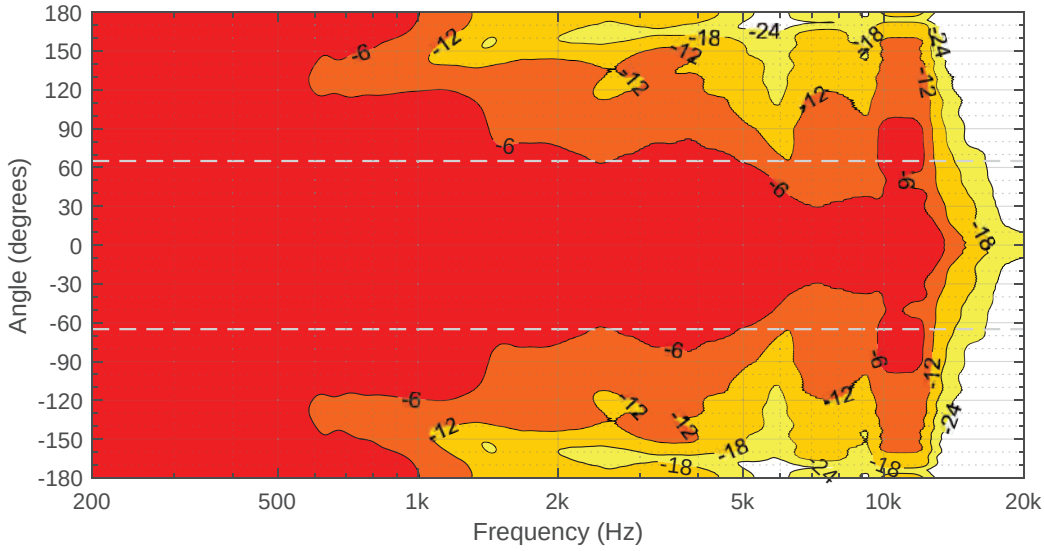

Vertical spatial frequency response

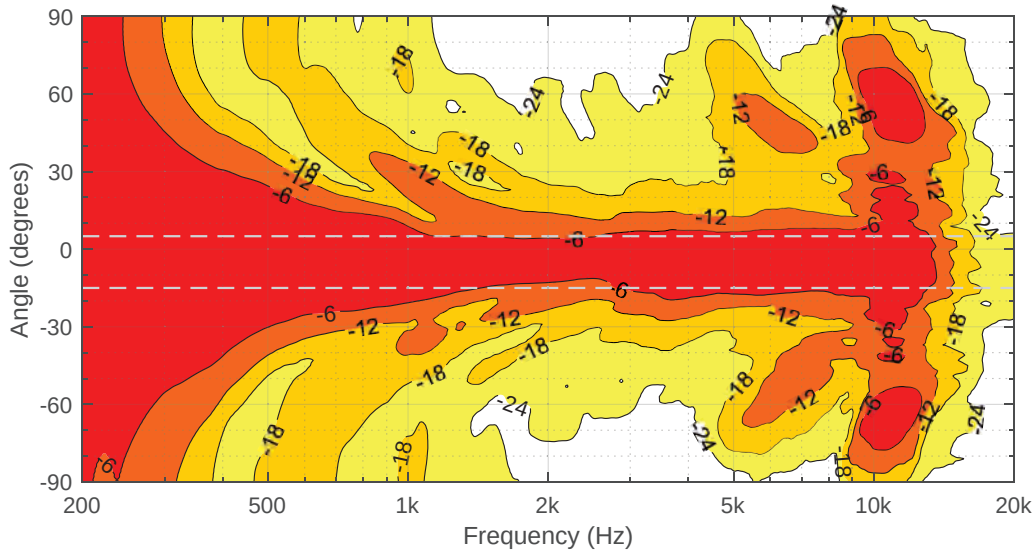

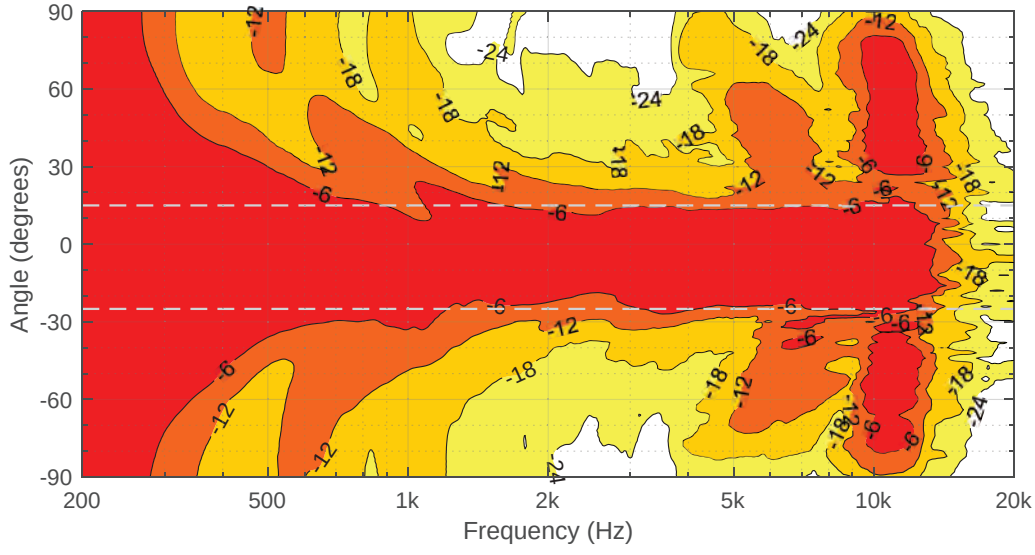

Dimensions

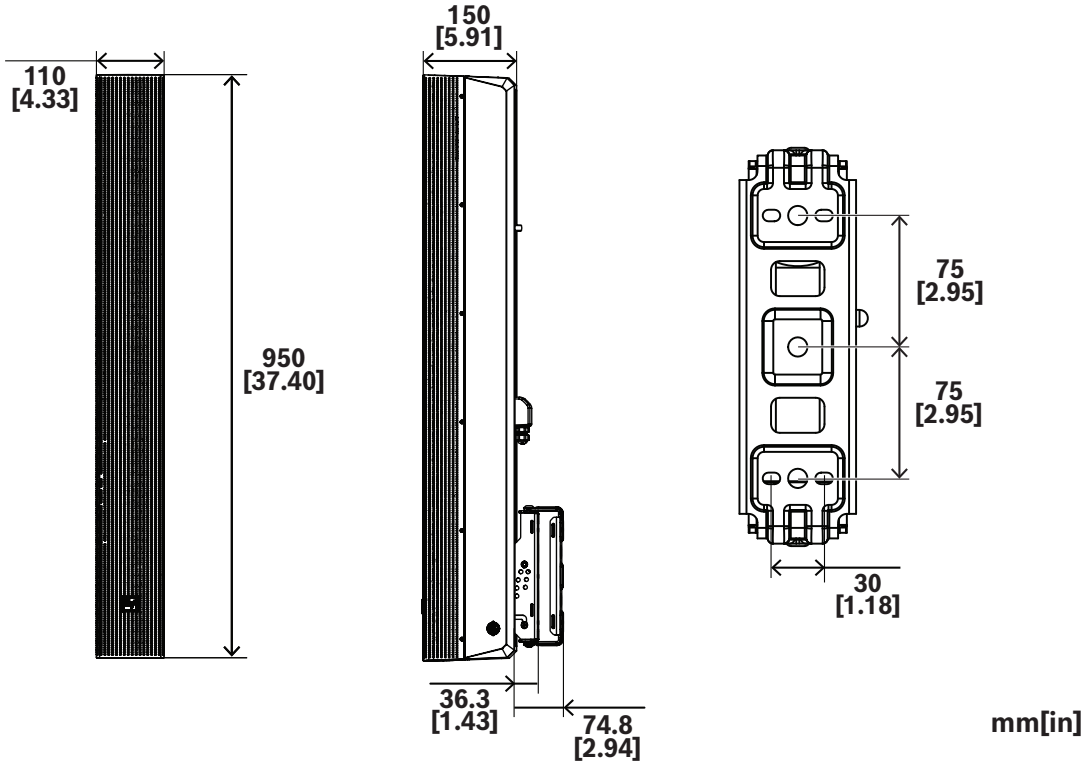
110
[4.33]
950
[37.40]
150
[5.91]
36.3
[1.43]
74.8
[2.94]
75
[2.95]
75
[2.95]
30
[1.18]
mm[in]

7.2.1 Technical data for EN54, type B installations

Data measured and expressed as per EN54-24 requirements.

Acoustic coverage

Frequency	Frequency response / Reproducibility		Horizontal coverage		Vertical coverage	
	Narrow	Wide	Narrow	Wide	Narrow	Wide
Hz	dB SPL		Degrees			
500	68	68	360	360	60	60
630	68	68				
800	67	67				
1000	65	64	230	230	30	40
1250	65	63				
1600	66	65				
2000	64	62	175	175	30	40
2500	61	60				
3150	64	63				
4000	66	64	125	115	25	40
5000	67	63				
6300	65	62				
8000	61	60				

Table 7.2: Measured full-space at 4 m, signal at 1 W of 1/3 octave band filtered pink noise

Sensitivity and max SPL

Sensitivity per EN54-24 standard (SPL 1 W/4 m):	75 dB (narrow) 74 dB (wide)
Max measured SPL per EN54-24 standard:	99 dB (narrow) 98 dB (wide)

Impedance

Tap setting	Impedance
8-Ohm direct coupled	8 Ω
70 V / 120 W	42 Ω
70 V / 60 W 100 V / 120 W	83 Ω

Tap setting	Impedance
70 V / 30 W 100 V / 60 W	167 Ω
70 V / 15 W 100 V / 30 W	333 Ω
70 V / 8 W 100 V / 15 W	667 Ω

8 References

8.1 Rigging (printed)

[1] W.E. Rossnagel, L.R. Higgins & J.A. MacDonald, Handbook of Rigging for Construction and Industrial Operations, McGraw-Hill Book Company, New York, NY, USA (2009).
[2] H. Donovan, Entertainment Rigging, http://www.riggingbooksandprograms.com, Rigging Seminars, Seattle, WA, USA (2002).
[3] J.O. Glerum, Stage Rigging Handbook, Southern Illinois University Press, Carbondale, IL, USA (2007).
[4] P. Carter, Backstage Handbook, Broadway Press, New York, NY, USA (1994).
[5] J. A. Klinke, Rigging Handbook, ACRA Enterprises, Inc., Stevensville, MI, USA (2012).
[6] Wire Rope Technical Board, Wire Rope Users Manual, American Iron and Steel Institute, Stevensville, MD, USA (2005).
[7] D. L. Hall, Rigging Math Made Simple, Spring Knoll Press, Johnson City, TN (2014).
[8] Newberry, W.G., Handbook for Riggers, Newberry Investments Company, Calgary, Alberta, Canada (1989).

---

1. *All other trademarks are property of their respective owners.

8.2 Mechanical engineering (printed)

[1] R.C. Hibbeler, Engineering Mechanics Statics & Dynamics, Pearson Prentice Hall, Upper Saddle River, NJ, USA (2012).
[2] R.C. Hibbeler, Mechanics of Materials, Pearson Prentice Hall, Upper Saddle River, NJ, USA (2012).
[3] J.L. Meriam & L.G. Kraige, Engineering Mechanics, Volume One - Statics, John Wiley & Sons, Inc., New York, NY, USA (2011).
[4] J.L. Meriam & L.G. Kraige, Engineering Mechanics, Volume Two - Dynamics, John Wiley & Sons, Inc., New York, NY, USA (2012).
[5] J.E. Shigley & C.R. Mischke, Mechanical Engineering Design, McGraw-Hill Book Company, New York, NY, USA (2014).

8.3 Rigging (websites)

[1] http://www.rigging.net
[2] http://www.cmworks.com/

F.01U.428.747

Bosch Security Systems, LLC
130 Perinton Parkway
Fairport, NY 14450
USA
www.electrovoice.com
© Bosch Security Systems, LLC, 2025

EU importer:
Bosch Sicherheitssysteme GmbH
Robert-Bosch-Platz 1
70839 Gerlingen
Germany
© Bosch Sicherheitssysteme GmbH, 2025
202503101053