FRAME-EVO-P14 / P14-US

Mounting frame for projectors

Manual Version 1.4

Date	Revision No.	Author	Checked	Approved	Description
18.05.2020	1.2	DWN	GJN	DWN	Update rigging slings
04.09.2020	1.3	DWN	DWN	DWN	Small changes
05.05.2022	1.4	TSN	GJN	VIU	Update on new layout

The following projectors can be mounted in this frame:

LCD Projectors
PT-MZ16K, PT-MZ13K, PT-MZ10K, PT-MZ880, PT-MZ780, PT-MZ680

Note: The above table lists some projector models that are compatible. Please contact us if you are missing a projector.

Contact

Tel.: +49 2204 9485 30
E-Mail: info@exactsolutions.de
Web: www.exactsolutions.de

Table of content

1. Preamble 3

1.1 Tools required 3

2. Safety instructions 4

2.1 Warnings 4

2.2 Caution 9

2.3 Risk Situations 10

3. Scope of delivery 13

4. Overview of model numbers 14

4.1 FRAME-EVO-P14 / P14-US designation 14

4.2 Optional accessory designation 14

5. Optional Accessories 16

6. Description of the product 19

6.1 Intended use 19

6.2 Specifications 19

7. Installing the projectors into the frame 20

8. Removing the Upper Ring 23

10. Adjustment options 27

11. Stacking frames 29

12. Mounting the frame on a truss 30

13. Maximum stacking information 32

14. System maintenance and inspection (Re-examination) 36

14.1 Mounting threads at bottom side 36

14.2 Sealed nuts with red coloured wax and other screw connections 37

14.3 Stacking points and locking pins 39

14.4 Screws and safety washers securing the projector in the frame 41

15. Disposal of components 42

15.1 Metal parts and packaging 42
15.2 Disposal of entire devices 42
16. Declaration of Conformity 43
Imprint 44

1. Preamble

The FRAME-EVO-P14 has been developed and manufactured with the highest care and attention. However, improper handling can cause a risk for safety and / or damage. Read these instructions carefully before handling and installing the product so that you can safely enjoy your device. In the following pages, you will find all the needed information for a safe and fast installation.
After the installation is done properly, you can enjoy all the features of your new product. Please consider keeping the original box and packaging materials, in case you ever need to ship the frame.

Model number: FRAME-EVO-P14 / P14-US

Copyright © 2022 EXACT solutions GmbH. All rights reserved.

1.1 Tools required

The only tool required is a 4 mm hex key to mount the projector into the FRAME-EVO-P14 / P14-US as well as a universal torque key.

Figure 1 Hex key 4 mm (Allen key)

Figure 2 Universal torque key

2. Safety instructions

These installation instructions must always be handed over to the person who is carrying out the installation.

Read these instructions carefully before installing the system.

2.1 Warnings

The FRAME-EVO-P14 / P14-US frame is intended for use by fully qualified, trained and competent persons to provide safe and secure transportation, installation and adjustment of projectors.

Warning: Handling only by instructed, qualified and authorised person with a minimum age 18 years and of sound mind.

Only use the frame with projector in a closed environment (conference rooms, theatres, convention halls, etc.) where there is no wind, moisture, excessive heat etc.

Make sure that only the designated projectors are installed in this frame! Do not try to use it with other projectors because serious accidents can occur!

Always use a rigging sling with steel cable insert and a shackle that is stable enough for the load including dynamic forces when falling into the rigging sling! (two sets of rigging sling and shackle are recommended) Otherwise it is not allowed to use the product and serious accidents or death can happen.

Do not remove or replace any parts of the projector frame on your own. Contact the manufacturer or service partner in case of damage or loss. Removing or replacing parts by non-certified companies or people might result in serious accidents and death.

Definition of qualified persons:

Trained/Qualified person
A person can be considered as trained/qualified when it has been thoroughly informed and/or trained about the assigned task and the possible dangers that can occur in case of improper behaviour and / or not observing precisely the installation instructions.

Qualified/Specialised person
A person can be considered qualified or specialised when, based on specialised training, knowledge and experience, it can assess the work assigned and recognise possible dangers.

Only use the frame and its components for its intended use.

- If this product is used for something else than its intended use, serious accidents and death may result. See chapter 6.1 Intended use

Installation work should only be carried out by a qualified technician.

- If this product is not installed correctly, serious accidents and death may result.

Do not use the FRAME-EVO-P14 / P14-US frame outdoors.

- This product is made only for indoor usage. If the FRAME-EVO-P14 / P14-US frame is mounted outdoor, there are many influences like wind or rain that can have an effect on the stability of the whole system.
- This can cause property damage, serious accidents and death.

A visual inspection must be done prior to every installation, in which the system is involved. The inspection must be performed by a qualified person.

- All parts of the frame must be inspected in detail prior to any usage
- Only if the frame and all its components are in a flawless condition, it is safe to use the system.
- For further details, see chapter 14. System maintenance and inspection (Re-examination)
- Using a projector frame which has damages, missing parts or the like can cause serious accidents and death.

Only use projectors that are specified by the manufacturer to be used with the frame. When mounting the projector into the frame, use all screws and washers that are specified

by the manufacturer. Make sure to tighten the screws safely, with the provided torque information

- It is mandatory to use all screws and safety washers that the manufacturer defines to mount the projector. Use only the ones that are clearly specified.
- For a safe installation the screws must be tightened with the provided torque
- Using the wrong screws or washers is highly dangerous. Tightening the screw with a to low torque can cause the screw to loosen itself. Tightening the screw with a too high torque might cause structural damage to the screw or the thread inside the projector. Not using the safety washers enables the screw to loosen itself.
- Ignoring these instructions can cause the parts or the whole system to fall down and with this can cause death, serious injuries or product damage.

Do not install the FRAME-EVO-P14 / P14-US or the projector while people are present under the mounting zone during the installation process.

- When installing the projector, make sure no one is in the area underneath the installation zone. Otherwise, this will be a risk for all people underneath, that could cause serious injuries and death.

Do not place the frame on top of unstable surfaces.

- If the frame or multiple frames are placed on the top of a surface, which is sloped or unstable, it /they may fall down or tip over and injury or damage could result. Make sure that the surface can support the overall weight of the frames including projectors and lens plus the weight of all additional equipment as well as other potential systems. The weight of one system consisting of projector, lens and EVO-FRAME is approx. 49,5 kg (109,13 lbs)[1]. A stack of up to three systems will result in a weight of approx. 148,50 kg (327,39 lbs)
- Using the product on unstable surfaces can cause serious accidents and death

Make sure that the structure from which you hang up to three FRAME-EVO-P14 / P14-US frames including projectors is capable of carrying the overall weight of approx. 148,50 kg (327,39 lbs) plus the weight of all additional equipment as well as other potential systems. Do not hang the frame from unstable or inappropriate structures.

- Prior to any installation, you must do a visual inspection to make sure that the system is in a good condition. For more information, please refer to chapter “14. System maintenance and inspection (Re-examination)”

[1] Projector weight with heaviest lens approx. 35 kg, EVO-FRAME P14 approx. 14,5 kg

- If the frame is hung on an unstable structure, the entire system can fall down and injuries may occur. Make sure that the construction can support a total weight of up to 148,50 kg (327,39 lbs) plus the weight of all additional equipment as well as other potential systems. The above-named weight of 148,50 kg (327,39 lbs) represents the weight of three systems (projector, lens, EVO-FRAME-P14). The weight of one system consisting of projector, lens and EVO-FRAME-P14 is approx. 49,50 kg (109,13 lbs)[1].
- Ignoring this might cause significant damage to the product and serious accidents or death may result

Make sure to use only approved and recommended accessories to mount (hanging, standing) the EVO-FRAMEs

- Do not use other accessories than the ones recommended and approved. Otherwise, using insufficient accessories may lead to serious injuries, death and property damage
- Please also refer to chapter “5. Optional Accessories”

Make sure to not exceed max. weight loads for ceiling mounting.

- For suspended installations, use only designated hanging accessories, like EVO-LINK-200 series and FRAME-PF-UNI-CLP5030 or FRAME-PF-UNI-CLP30PT rigging clamps. Please refer to the corresponding instructions for the accessories used. Do not overload these accessories and make sure the overall weight is within working specifications of the accessories. Please also refer to chapter “5. Optional Accessories” and “13. Maximum stacking information”.
- Overloading the accessories and other equipment can cause serious accidents and death

Do not stack or hang more projector frames under each other than allowed by the manufacturer

- Do not exceed the maximum number of stacked or hung units as this may cause the whole system or parts of it to fall down
- Refer to chapter 13. Maximum stacking information
- Ignoring this might cause significant damage to the product and serious accidents or death may result

When stacking multiple frames, it is mandatory to use all four stacking bolts and insert them correct and completely

- If less than four stacking bolts are used, or if they are not inserted correctly or completely, it is not safe to use the system. See chapter 11. Stacking frames
- The system is statically designed in such a way, that all bolts must be used correctly. Otherwise, parts or the whole system might fall down. This can cause serious accidents and death as well as property damage.

When using the adjustment features of the frame, never apply significant force.

- When using the adjustment features for pan, tilt and yaw of the frame, never apply force. All adjustments shall work smoothly and do not require significant force.
- If significant force is necessary, the cause may be a faulty part or that, the end of the adjustment range has been reached.
- Ignoring this, might cause significant damage to the product and serious accidents may result

Always secure the frames to the rigging truss with rigging slings with steel cable insert and shackles (two sets of rigging sling and shackle are recommended).

- The frames must always be secured with an appropriate rigging sling and shackle so that in case of a malfunction it doesn't fall more than 10 cm. It is recommended to use two sets of rigging sling and shackle to avoid too much dynamic forces as well as the projector swinging. Please consult the local laws or regulations regarding the additional safety of hanging equipment.
- It is important to use correct rigging slings with cable inserts and shackles that are capable to resist the high dynamic forces.
- The rigging slings and shackles act as a secondary safety element and it is mandatory to use them. Not using them or using the wrong products might cause serious accidents and death.

Service work shall only be done by qualified personnel that is authorized by the manufacturer. Furthermore, only original spare parts shall be used.

- Unauthorized personnel shall never do service work on the products, as service work requires special training and knowledge
- Spare parts must always be original ones, provided by the manufacturer
- Not observing these rules on service work ends with immediate effect the responsibility of the manufacturer and, where applicable, warranty is irrecoverably lost. The product is no longer safe to use. This may cause serious accidents or death and property damage.

Always make sure that the upper and lower part of the frame are securely attached to each other.

- It is necessary that all four attachment nuts are tightened as well as the locking splints are correctly inserted. For further information see also chapter 8. Removing the Upper Ring and chapter **9. Reinstalling the Upper Ring**
- Not securely tightening the attachment nuts and/or not correctly inserting the locking splints may lead to serious accidents and death.

2.2 Caution

Before installing the projector into the FRAME-EVO-P14 / P14-US frame, please read the projector's user manual. When the projector has a lens attached, please remove it.

- The FRAME-EVO-P14 / P14-US frame with the projector inside must be installed only in an environment that is recommended by the projector manufacturer.
- If this product is not installed correctly, serious accidents may result.

Minimum two persons are required to install the FRAME-EVO-P14 / P14-US frame.

- With regard to the overall weight of all necessary installation devices, make sure to handle those with at least two people.

Periodic inspections are mandatory

- Depending on local laws and regulations owners / users must do periodic inspections of the frame and all components. In case of German regulations this must be done and documented once a year by a qualified and authorised person. Furthermore, for German DGUV V17/V18 is mandatory to revalidate the safety every four years. This must be done and documented by an expert, that is authorized by the German Social Accident Insurance (DGUV)

Do not place unsecured accessories like tools or electrical devices (converter, video player etc) on top of the frame.

- These devices may fall down and causes serious accidents or even death to people who are situated near the installation.
- The additional weight of every device added to the system must be considered. Contact the manufacturer for any questions.

The frame is designed for a static, non-moving, installation.

- The frame and the installed projector shall not be mechanically or electro mechanically moved around for example for show purposes.

Use suitable transport boxes / flight cases to protect the system during transport. Handle with care.

- When transporting the frame with the installed projector, make sure you are using a flight case that protects and damps impacts during transport.
- Transport shall be carried out gently to avoid damages through falling or similar impacts.
- During transportation, heavy impacts might damage the projector but also the frame. In this case, the stability and safety of the system is at high risk. This can lead to accidents, death and property damage.

Use only gentle cleaning agents to avoid damage

- Cleaning may be done with a soft cloth and a little bit of warm, slightly soapy water
- Do not use any oil, acid etc. on the frame or its components. This may damage the system.

Incorrect disposal is a risk to humans and nature

- Disposal must be done in accordance with local laws and regulations. Contact the manufacturer in case of any questions.

2.3 Risk Situations

Risk of injury due to the possibility of falling objects during the assembly or disassembly of the FRAME-EVO-P14 / P14-US frame.

- Protection objective: avoid injury from falling parts.
- Wear appropriate safety shoes, gloves and helmet.
- Make sure the area under the frame is clear during installation.

Risk of hitting the head with the FRAME-EVO-P14 / P14-US frame during the hanging set up process.

- Protection objective: avoid injury from hitting the head.
- Wear a helmet

Incorrect installation may lead to certain parts of the FRAME-EVO-P14 / P14-US frame or the entire FRAME-EVO-P14 / P14-US frame to fall down.

- Protection objective: prevent personal injury and property damage.

- Double check the FRAME-EVO-P14 / P14-US frame and its installation.

Insufficient load capacity of the supporting structure may lead to certain parts of the FRAME-EVO-P14 / P14-US frame or the entire FRAME-EVO-P14 / P14-US frame to fall down.

- Protection objective: prevent personal injury and property damage.
- Provide adequate dimensioning of the supporting structure. The supporting structure must be able to support the combined weight of all the equipment attached to, or hung from it
- Ensure correct installation of the supporting structure.

Usage of unsafe ladders/steps/scaffolding may lead to serious personal injuries

- Protection objective: prevent personal injury by using only safe ladders/steps/scaffolding.
- Use only appropriate and safe equipment
- Always follow the documentation of the manufacturer of the provided ladders/steps/scaffolding
- Use personal safety equipment if necessary

The fingers or the hand of the user can be caught between the outer rings and the plates or projector.

- Protection objective: prevent personal injury by using safety gloves.
- When the adjustment of the image is made, the user must always keep his hands on the hand levers (see picture below)

The fingers of the user can be caught between spring clips and the attachment nuts of the upper part of the frame.

- This can potentially happen on all for connection points where the spring clips are used
- Protection objective: prevent personal injury by using safety gloves.
- When working with the spring clips, be careful not to get hurt

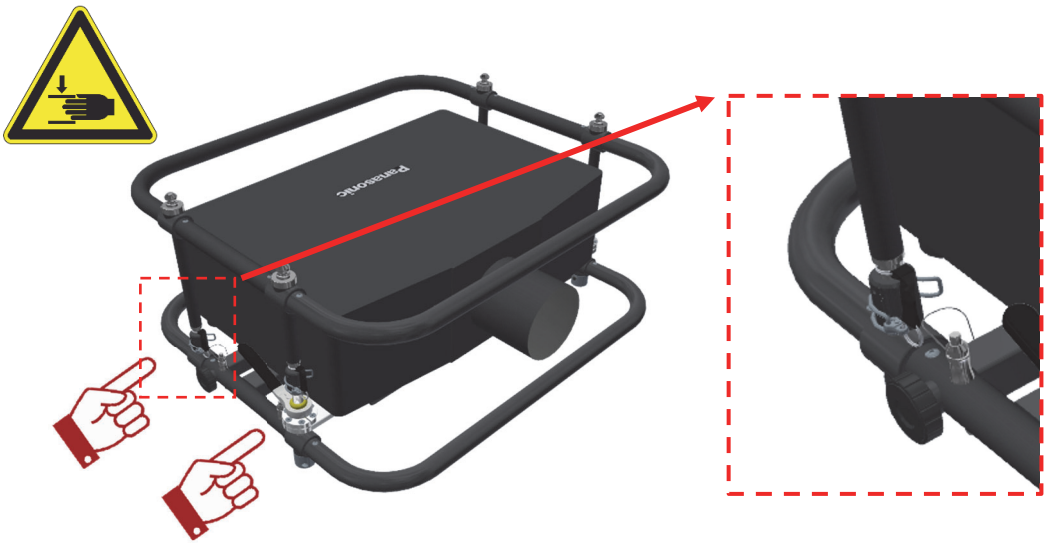

3. Scope of delivery

Note: Please check the delivery for completeness and damage immediately after you receive the shipment. Please contact your vendor in case of missing or damaged parts.

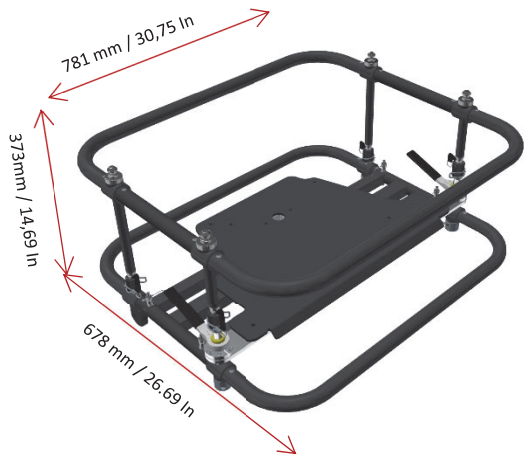	**FRAME-EVO-P14 / P14-US** • Used for projector installation • Number of units: **1** • Weight: **14,5 kg / 31,97 lbs**
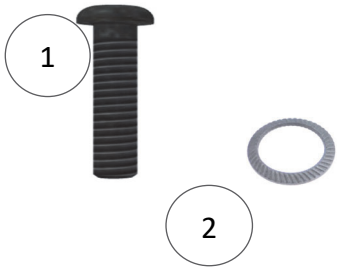	1) **5 x** M6x20 ISO 7380 screws (galvanized steel 10.9) 2) **5 x** Ø6 Schnorr Washer **Used to secure the projector into the frame**
	User manual and installation guide for FRAME-EVO-P14 / P14-US

4. Overview of model numbers

4.1 FRAME-EVO-P14 / P14-US designation

European market	Non-European market
Manufacturer m.no.: FRAME-EVO-P14 Panasonic EU m.no.: ET-RFD50	Manufacturer m.no.: FRAME-EVO-P14-US Panasonic USA m.no.: ET-PFD465

m.no. = model number

In this manual, when reference is made to the manufacturer model number it is also automatically a reference to the Panasonic EU / USA model number like described in the table above

4.2 Optional accessory designation

The following accessories is a list of EXACT solutions products. There might be third party accessories that are suitable. Contact your dealer or the manufacturer if you have further questions.

European market	Non-European market
Manufacturer m.no.: FRAME-PF-UNI-CLP5030 Panasonic EU m.no.: ET-CLP50	Manufacturer m.no.: FRAME-PF-UNI-CLP5030 Panasonic USA m.no.: ET-PFD50CLAMP
Manufacturer m.no.: FRAME-PF-UNI-CLP30PT Panasonic EU m.no.: ET-CLP30	Manufacturer m.no.: FRAME-PF-UNI-CLP30PT Panasonic USA m.no.: ET-PFD30CLAMP
Manufacturer m.no.: EVO-LINK-200 Panasonic EU m.no.: NA	Manufacturer m.no.: EVO-LINK-200-US Panasonic USA m.no.: ET-PFD065TMS2
Manufacturer m.no.: EVO-LINK-201 Panasonic EU m.no.: NA	Manufacturer m.no.: EVO-LINK-201-US Panasonic USA m.no.: ET-PFD165TMS2
Manufacturer m.no.: EVO-LINK-210 Panasonic EU m.no.: NA	Manufacturer m.no.: EVO-LINK-210-US Panasonic USA m.no.: ET-PFD265TMCX2
Manufacturer m.no.: EVO-LINK-211 Panasonic EU m.no.: NA	Manufacturer m.no.: EVO-LINK-211-US Panasonic USA m.no.: ET-PFD365TMCX2

Manufacturer m.no.: EVO-LINK-SK Panasonic EU m.no.: NA	Manufacturer m.no.: EVO-LINK-SK Panasonic EU m.no.: NA

m.no. = model number

In this manual, when reference is made to the manufacturer model number it is also automatically a reference to the Panasonic EU / USA model number like described in the table above

5. Optional Accessories

Please refer to chapter 4. Overview of model numbers to assign the Panasonic EU and USA model numbers, to the model numbers below.

Please refer to chapter 12. Mounting the frame on a truss and the following for information regarding the usability of the optional accessories.

	EVO-LINK-200 Optional accessory for truss mount installations. *More information can be found in the EVO-LINK-200 series installation manual.*
	EVO-LINK-201 Optional accessory for truss mount installations. *More information can be found in the EVO-LINK-200 series installation manual.*
	EVO-LINK-210 Optional accessory for truss mount installations. *More information can be found in the EVO-LINK-200 series installation manual.*

	EVO-LINK-211 Optional accessory for truss mount installations. *More information can be found in the EVO-LINK-200 series installation manual.*

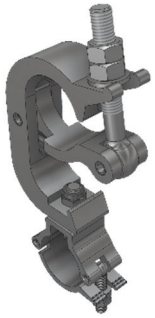	**FRAME-PF-UNI-CLP5030** Optional accessory for hanging one FRAME-EVO-P14 / P14-US on a truss. FRAME-PF-UNI-CLP5030 represents a complete set of 4 pieces.
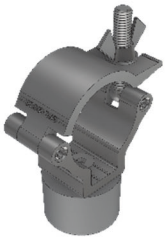	**FRAME-PF-UNI-CLP30PT** Optional accessory for portrait mode table installation FRAME-PF-UNI-CLP30PT represents a complete set of 4 pieces
	FRAME-PF-UNI-PORAD Optional accessory for portrait mode hanging Usually in combination with EVO-LINK-200 Series

The optional accessories must be purchased separately. They are not included in the standard package!

Make sure to not exceed max. weight loads for ceiling mounting.

Always secure the frames to the rigging truss with rigging slings with steel cable insert and shackles (two sets of rigging sling and shackle are recommended).

Make sure to use only approved and recommended accessories to mount (hanging or standing) the EVO-FRAMEs

6. Description of the product

6.1 Intended use

The FRAME-EVO-P14 / P14-US is a frame that is designed and intended for the protection and easy handling of a professional projector installed inside. The FRAME-EVO is guarding highly expensive devices during handling. Furthermore, it offers possibilities to adjust the projector within the frame. Optional accessories can be attached to the frame for example to hang it from a truss or place it on the floor. The FRAME-EVO series is intended for use by fully qualified, trained and competent persons to provide safe and secure transportation, installation and adjustment of projectors. The frame, as well as the projectors that can be installed, are made only for indoor usage.

6.2 Specifications

Parameter	**Value**
Size [mm]	See drawing
Weight [kg] Frame only	14,5 kg
Maximum projector weight including lens	35,00 kg *Note:* *Projector weight is approx.: 25 kg* *Heaviest lens is approx.: 10 kg*
Overall system weight (Projector, heaviest lens, frame)	Approx. 49,5 kg
Operating temperature [°C]	0 - 45
Operating rel. humidity [%rH]	10 - 75
Operation area	Indoor in closed rooms

7. Installing the projectors into the frame

Make sure that only the designated projectors are installed into this frame! Do not try to use it with other projectors because serious accidents can occur!

Note: The following figures show the installation of PT-MZ16K projector. Other compatible projectors may have a different number of needed screws and safety Schnorr washers. The positions of the screw holes may also differ.

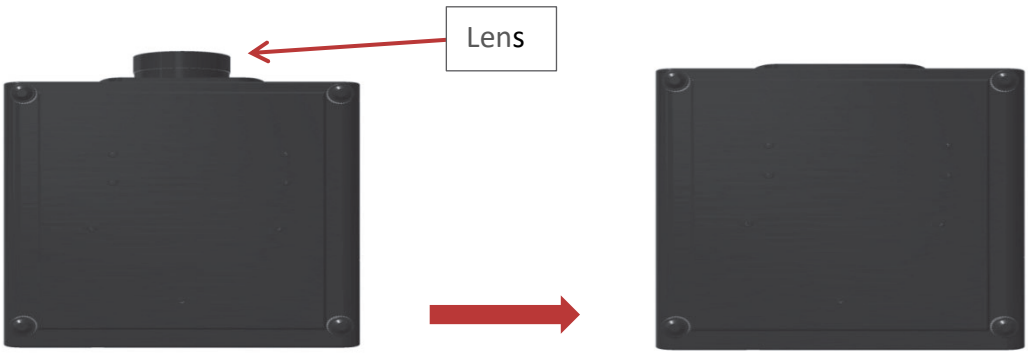

Figure 3 Removing the lens

Step 1: Place the projector upside down on a suitable flat surface then remove the lens (if it is pre-installed). For easier access you may first remove the upper ring before mounting the projector. Please refer to chapter 8. Removing the Upper Ring. Otherwise, it is recommended to place an appropriate material underneath the projector, so that it is lifted up by about 10 cm. This will help during the installation process.

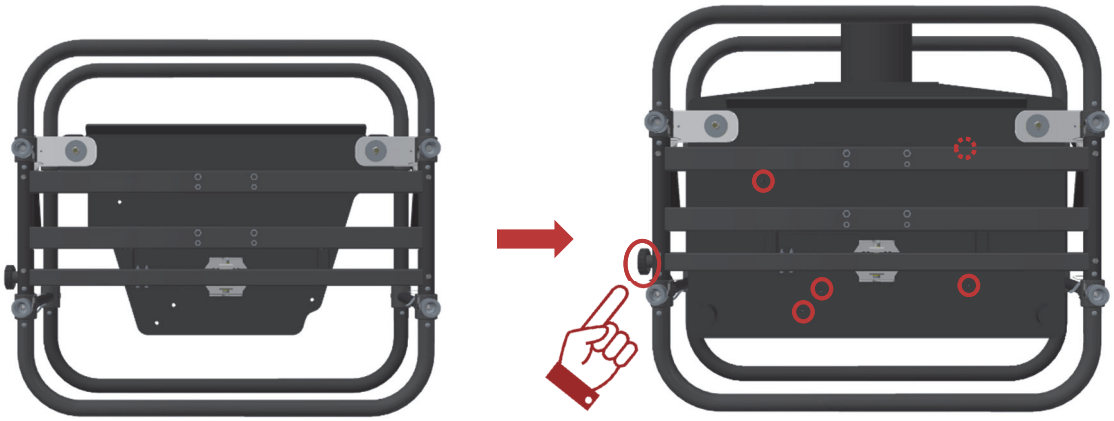

Figure 4 Mounting the projector into the frame

Step 2: Position the frame over the projector so that the adjustment screw is at the back, aligning the M6 screw holes. Please put the projector in the right position so that the front/back position is correct when installing. Otherweise the position of the holes will not match.

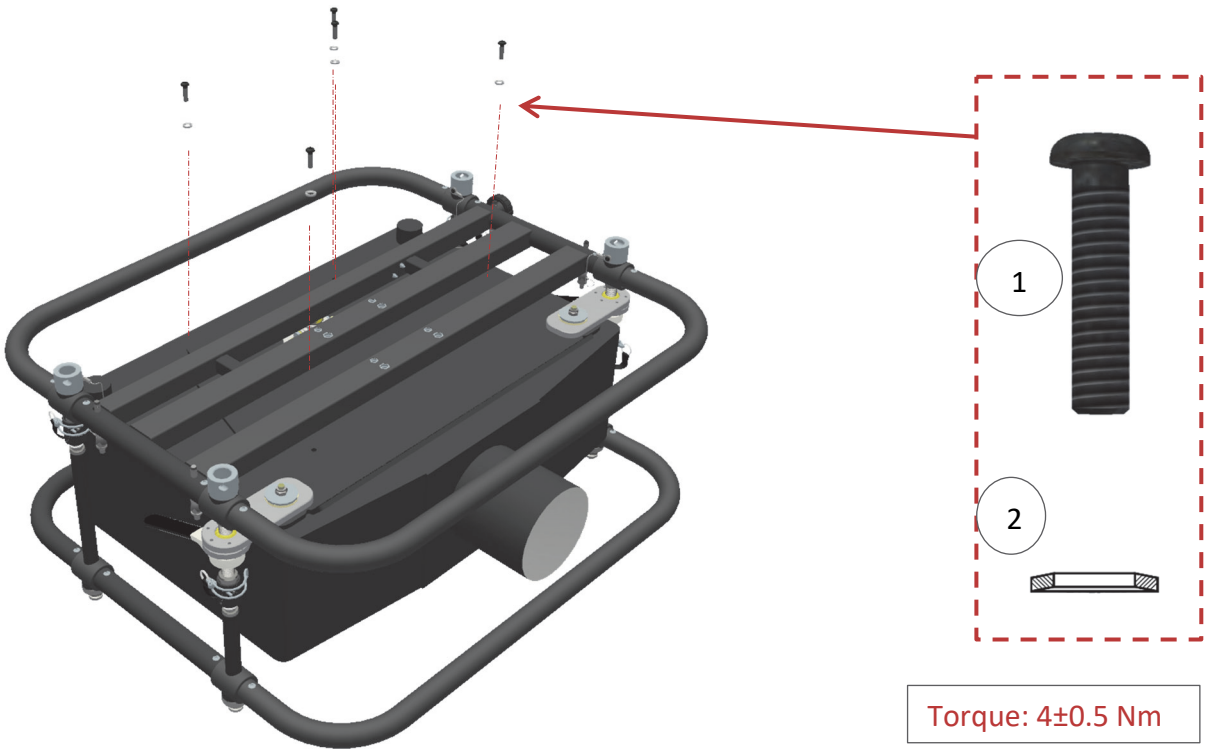

Figure 5 Securely tighten all screws

Step 3: Place the recommended number of **Ø6 Schnorr Washers (2)** over each corresponding hole. Secure the recommended number of **M6x20 ISO 7380 screws (1)** into each hole with 4 Nm torque. Ensure each screw runs through the plate and catches into the corresponding M6 thread in the projector surface. Please make sure to use only the correspondent screw holes when installing a projector!

Do not forget to use all of the recommended Ø6 Schnorr Washers (2) as they are preventing the screws to loosen themselves!

Make sure you tighten all of recommended number of screws with the correct torque of 4 Nm

The orientation of the Schnorr safety washers is important and it is mandatory to install them in the correct orientation. See Figure 6 and Figure 7.

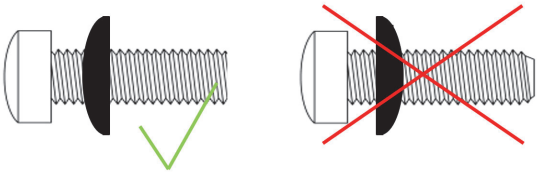

Figure 6 Orientation of Schnorr safety washer

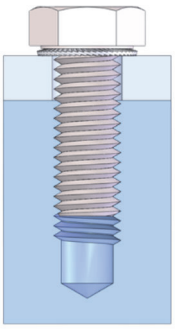

Figure 7 Schnorr safety washer correct orientation (Picture by Schnorr)

Step 4: The lens can be attached back to the projector.

8. Removing the Upper Ring

The purpose of the Installation Version is to have a quick, simple and tool free possibility to remove the Upper Ring for compact applications.

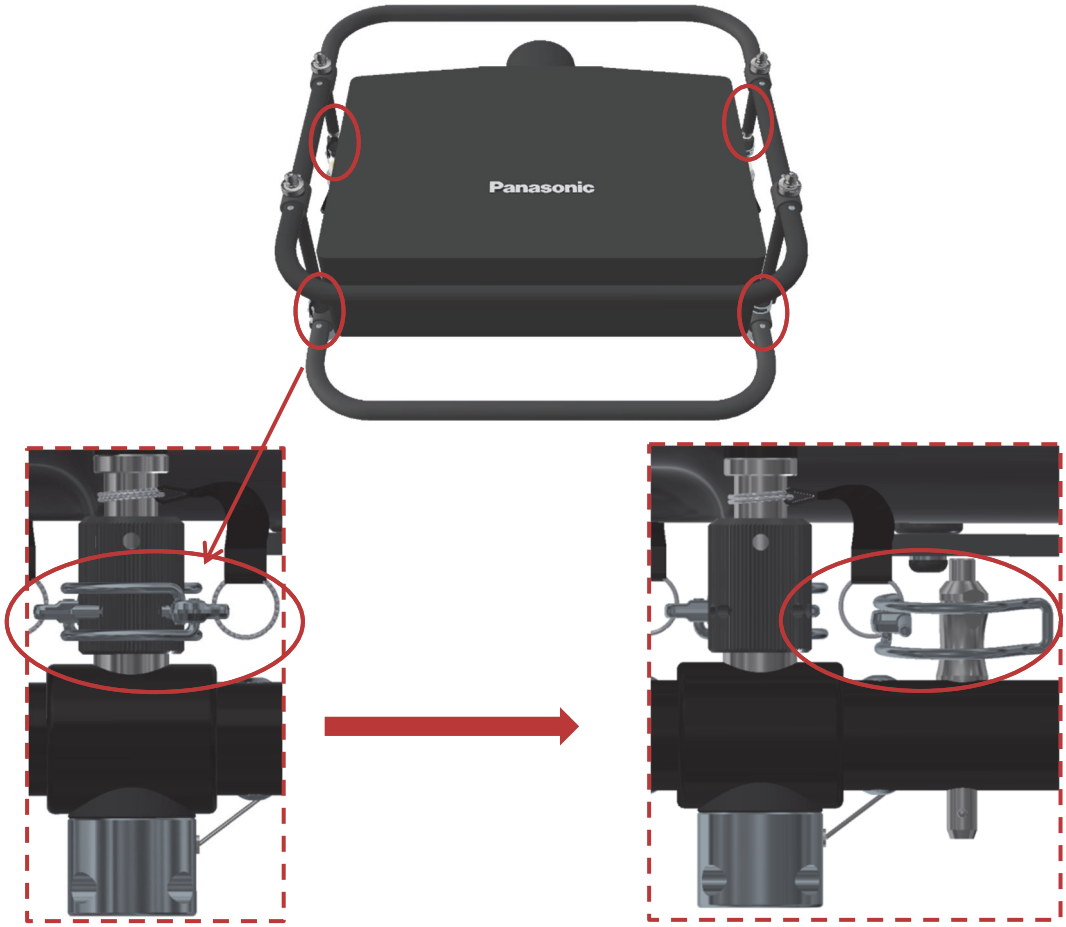

Figure 8 Removing the four spring clips

Step 1: Remove the 4 x spring clips as presented in the above picture. Because the spring of the spring clip is strong, please be careful not to clamp your fingers between the spring and the attachment nut

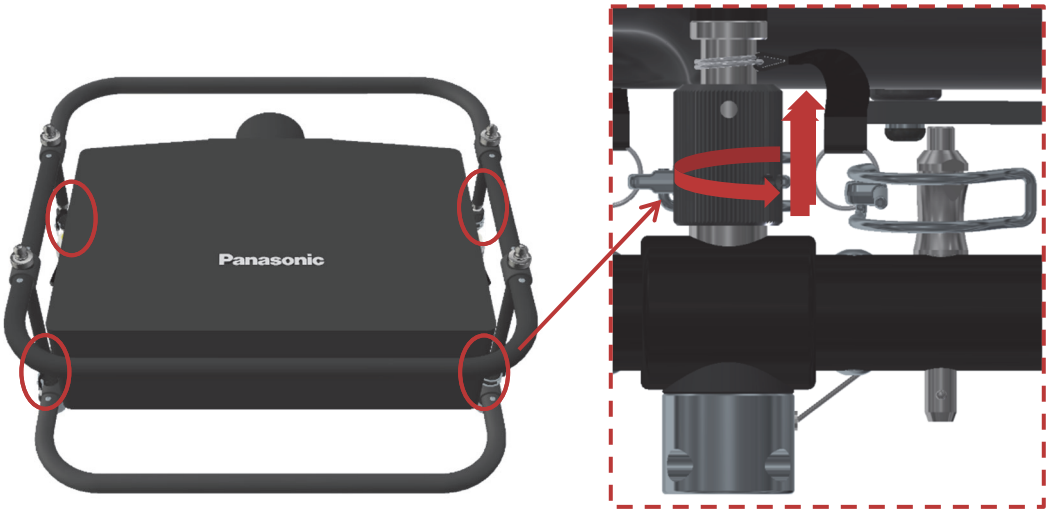

Figure 9 Unscrew the four attachment nuts

Step 2: Unscrew the 4 x attachment nuts (as presented in the above picture) until they are completely loose and can be move up and down freely.

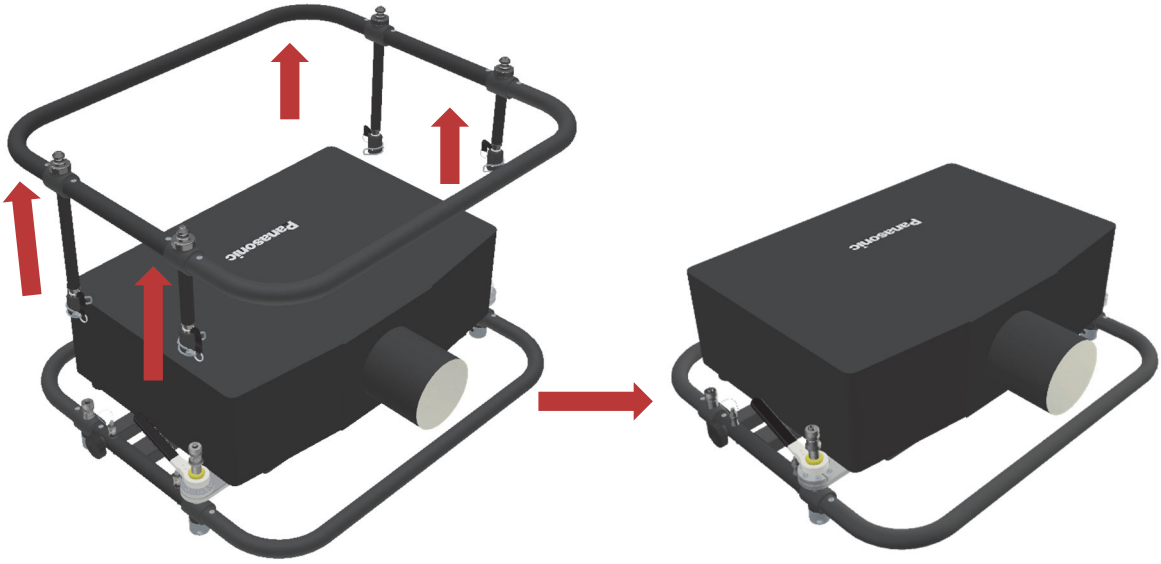

Figure 10 Remove the upper ring

Step 3: Remove the Upper Ring and you will have the Installation Version of the frame.

9. Reinstalling the Upper Ring

Always make sure that the upper and lower part of the frame are securely attached to each other. It is necessary that all four attachment nuts are tightened as well as all four locking splints are correctly inserted.

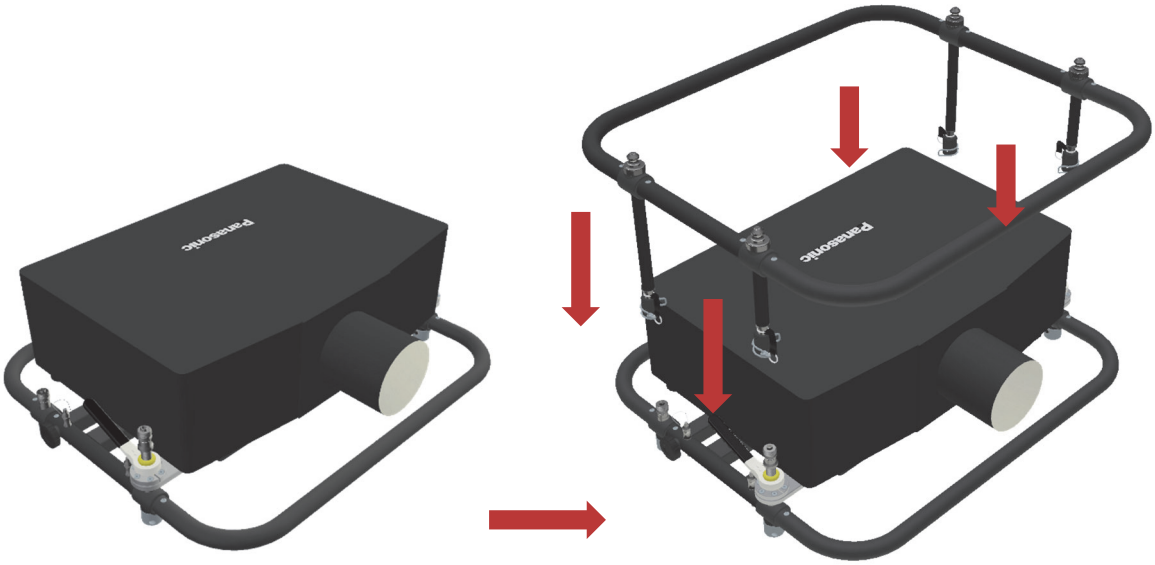

Figure 11 Reposition the upper ring

Step 2: Reposition the Upper Ring on the top of the Bottom Ring in such a way that the 4 x attachment nuts are lying on the corresponding position.

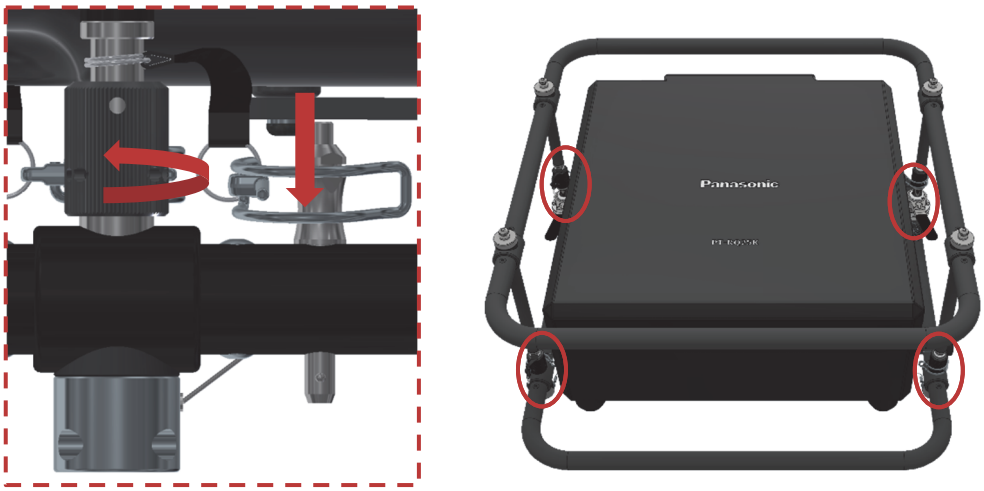

Figure 12 Tighten the four attachment nuts

Step 3: Tighten back the 4 x attachment nuts until there is no play and the attachment nuts can not be moved up or down.

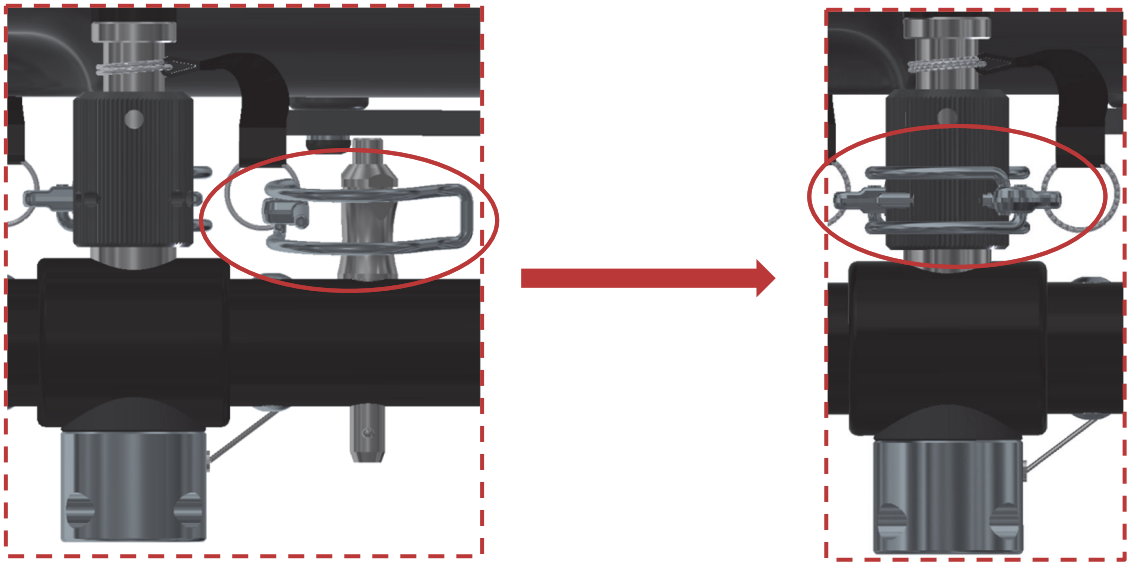

Figure 13 Reinsert the four spring clips and secure them

Step 4: In the process of attaching the Upper Ring back to the frame, as a last step, please don't forget to reinsert the 4 x spring clips back into the attachment nut. Because the spring of the spring clip is strong, please be careful not to clamp your fingers between the spring and the attachment nut.

10. Adjustment options

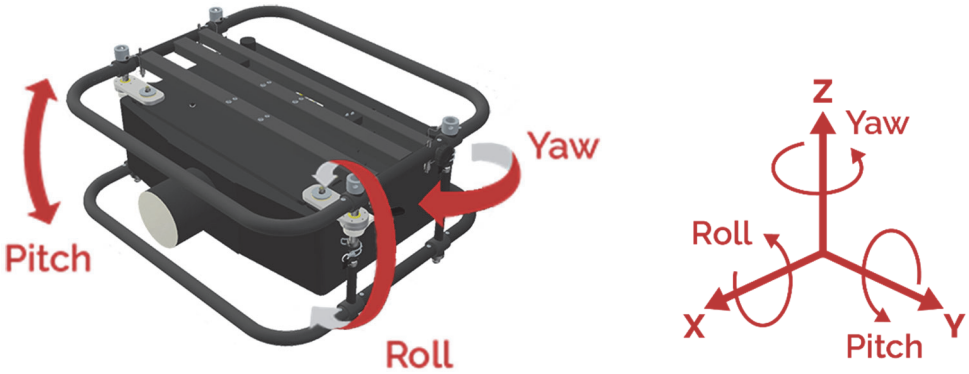

Figure 14 Illustration of yaw, pitch and roll

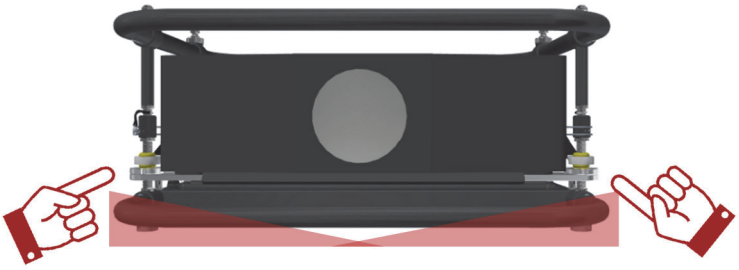

Figure 15 Adjustment: Roll

Roll

Using the hand levers to the left and right you can adjust the position of the projector with an angle of ±3.1 degrees.

You can lower or lift the front left or right corner.

To roll the projector around the center axis, the two hand levers must be turned in opposite directions.

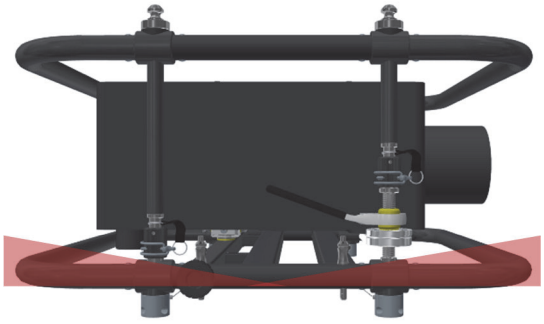

Figure 16 Adjustment: Pitch

Pitch

Also by using the two hand levers at the sides, you can lower the projector by an angle of -2.7 degrees and lift it by an angle of +3.3 degrees.

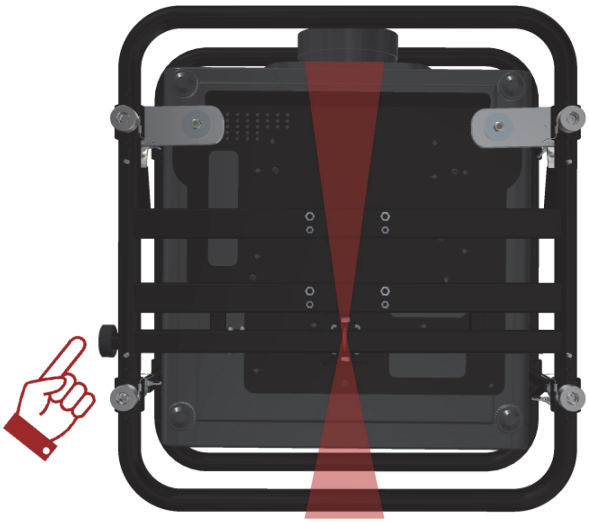

Figure 17 Adjustment: Yaw

Yaw

By turning the adjustment screw below the projector, you can move the back of the projector to the left or to the right by an angle of ±3.1 degrees.

When adjusting Roll/Pitch/Yaw, always keep your hands on the hand leavers.

11. Stacking frames

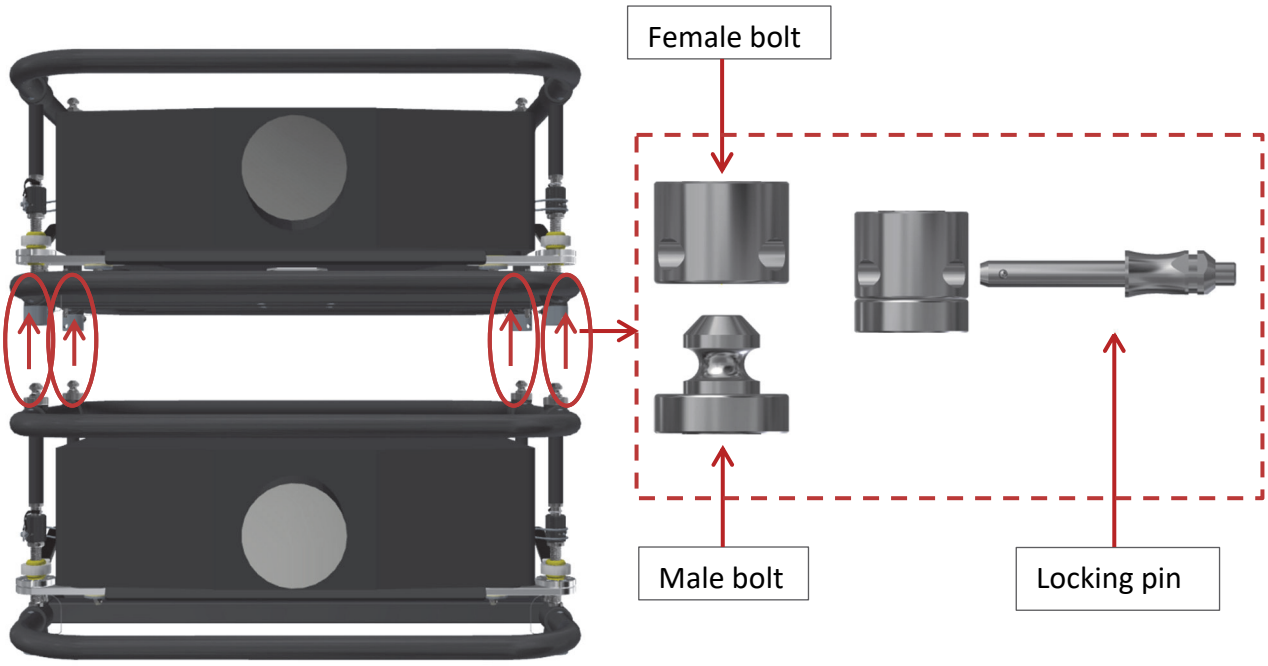

Figure 18 Stacking frames

Step 1: Place the upper frame with mounted projector on top of the lower frame with mounted projector. Make sure the four male bolts enter into the correspondent female bolts. To secure, insert the locking pins through the holes in the female bolts. Always make sure that the locking pins are locked after being inserted

When stacking the frames, make sure that all four locking pins pass completely through the female stacking bolt and that they are secured.

12. Mounting the frame on a truss

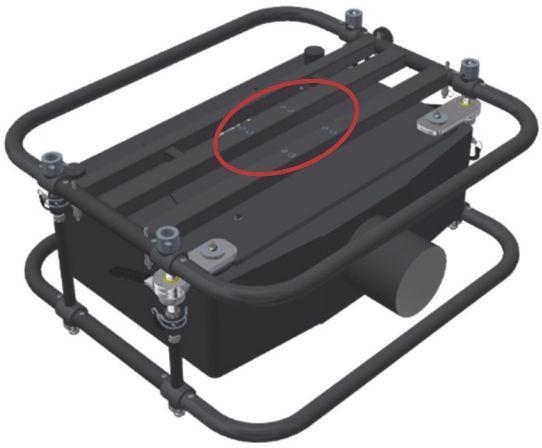

Figure 19 Threaded holes on bottom side of frame

To hang the frame on a truss one must use the recommended **4 x M6** or/and the **4 x M8** threaded holes to attach a mounting accessory like the **EVO-LINK-200 series**. Use only the original and recommended accessories for this procedure. Make sure the trussing or supporting structure is capable of carrying the overall weight.

Always secure the frames using appropriate **rigging slings with steel cable insert and shackles**. Make sure they are chosen correctly regarding strength, format and length. Please avoid high dynamic forces by ensuring that the frame will not drop more than **10 cm** into the rigging slings.

Please consult the local laws or regulations regarding the additional safety of hanging equipment.

For further information regarding an appropriate rigging sling with steel cable insert and shackle please contact us.

Insufficient load capacity of the supporting structure may lead to certain parts of the FRAME-EVO-P14 / P14-US frame or the entire FRAME-EVO-P14 / P14-US frame to fall down.

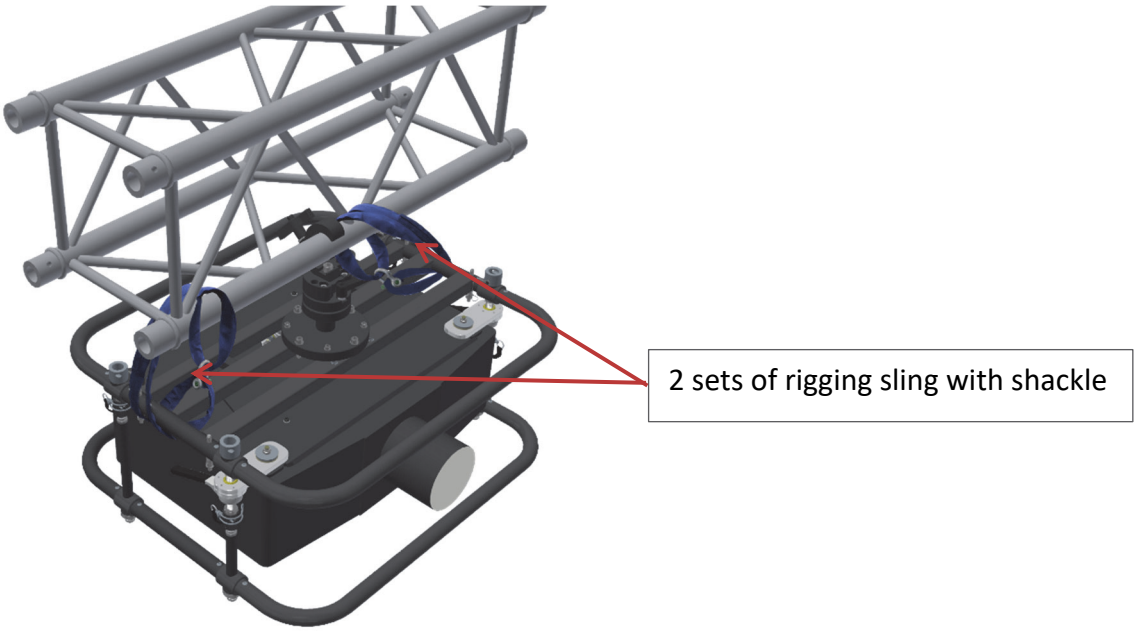

Figure 20 Securing one frame with two sets of rigging slings

Figure 21 Securing two frames with two sets of rigging slings

When hanging two frames under each other, secure all frames with the rigging slings. Securing only the upper frame or only the lower frame is not sufficient! Figure 21 shows two frames hanging from a truss where both are secured with rigging slings (Note: The lower frame is without projector for illustration purpose)

13. Maximum stacking information

Please refer to the tables below to confirm proper usage.

Do not try to setup the frame in another position than that presented, because accidents can occur!

With EVO-LINK-200 series			
	1	2	3
Landscape		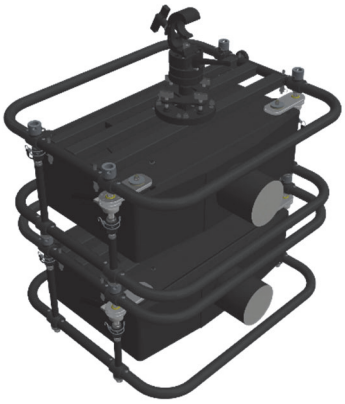	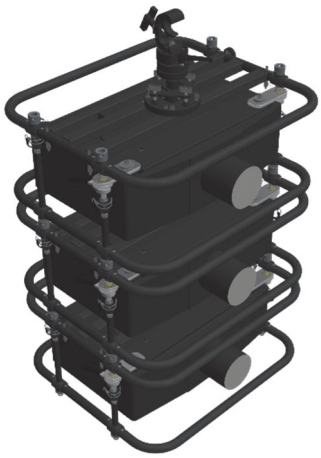

With rigging clamps FRAME-PF-UNI-CLP5030		
Portrait	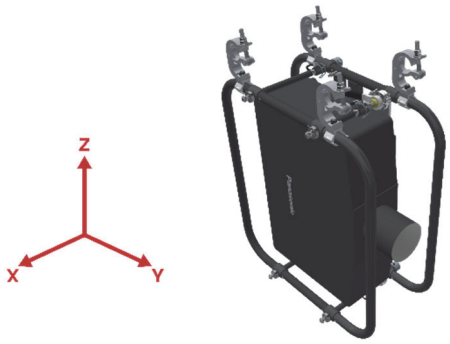	Distance between the rigging clamps: • On X axis: 275 mm • On Y axis: between 380 mm and 390 mm
Landscape	1	2
		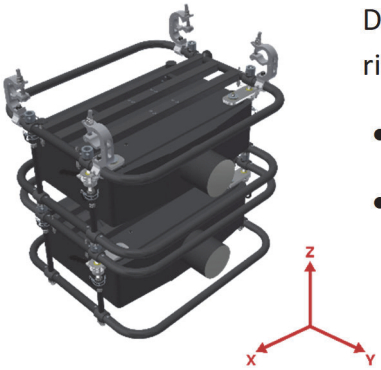 Distance between the rigging clamps: • On X axis: 718,5 mm • On Y axis: between 380 mm and 390 mm
Warning: hanging more than two projectors with the rigging clamp is not possible! Please do not try to hang more than two projectors with the rigging clamps because mechanical failure and accidents can occur.		
Vertical Down	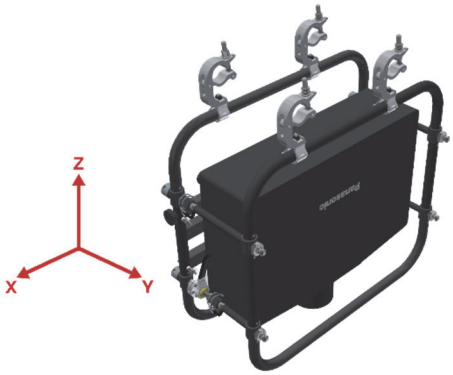	Distance between the rigging clamps: • On X axis: between 240 mm and 450 mm • On Y axis: 275 mm
Vertical Up	Not possible because of the cooling system that is located on the back side of the projector. There always must be an unobstructed space around the projector, please refer to the corresponding projector manual.	

With Portrait Adapter FRAME-PF-UNI-PORAD together with EVO-LINK-200 series	
Portrait	• If using FRAME-EVO-P14 / P14-US together with FRAME-PF-UNI-PORAD one of the four clamp must be removed so that only three clamps are used • More information can be found in the FRAME-PF-UNI-PORAD installation manual.
Vertical Down	

Warning: When using rigging clamps make sure that they are mounted centred. This makes sure that the weight of the frame and projector is equally distributed between all clamps and to the projector frame.

Warning: When using a Portrait Adapter make sure that it is mounted centred. This makes sure that the weight of the frame and projector is equally distributed between all clamps of the portrait adapter and to the projector frame.

Standing on a floor			
Portrait	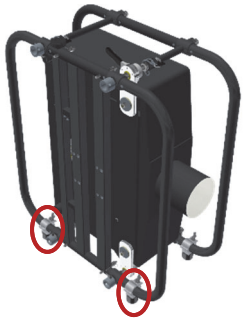	In this position one must use the **FRAME-PF-UNI-CLP30PT** and the frame has to be positioned with the adjustment screw on top.	
Landscape	1	2	3
Vertical Up	Not possible because of the cooling system that is located on the back side of the projector. There always must be an unobstructed space around the projector, please refer to the corresponding projector manual.		

14. System maintenance and inspection (Re-examination)

The FRAME-EVO-P14 / P14-US does not require special maintenance but a visual inspection **must be done prior to every installation** in which the system is involved. The inspection must be done by a qualified person!

Periodic inspections are mandatory. Depending on local laws and regulations owners / users must do periodic inspections of the frame and all components. In case of German regulations this must be done and documented once a year by a qualified and authorised person. Furthermore, for German DGUV V17/V18 it is mandatory to revalidate the safety every four years. This must be done and documented by an expert that is authorized by the German Social Accident Insurance (DGUV).

Note: The necessary inspection can also be done by the manufacturer.

14.1 Mounting threads at bottom side

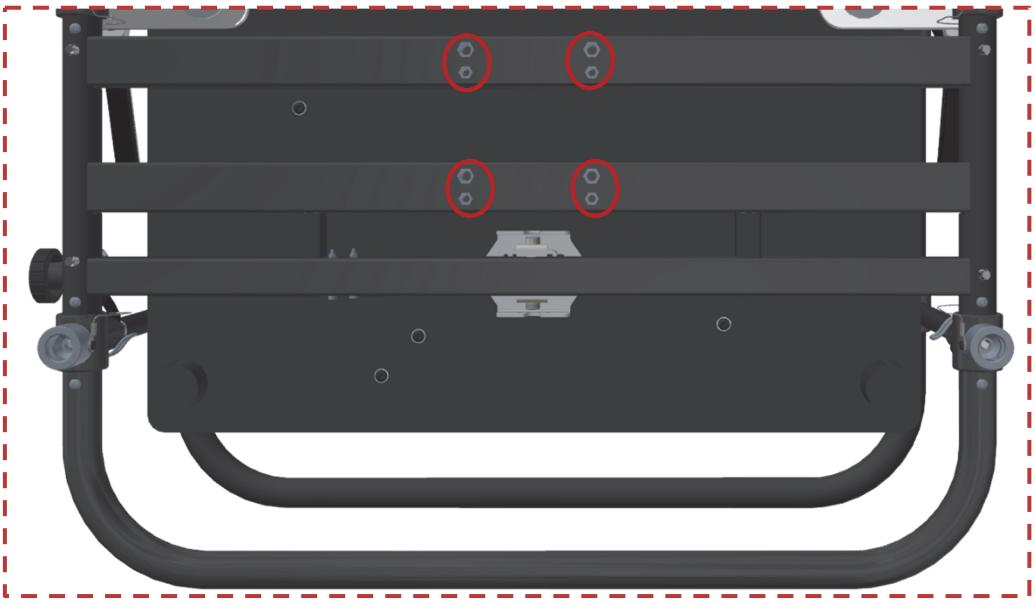

Figure 22 Inspection of mounting threads at bottom side

- Before and after each installation, the **M6 and M8 mounting holes** (see red marking in Figure 22) must be carefully inspected, as they may get damaged during the installation of the hanging accessory.
- Please carefully examine the M6 and M8 mounting holes by checking each one of them and make sure the thread is not broken or damaged in any way.

14.2 Sealed nuts with red coloured wax and other screw connections

- Please make a visual inspection to be sure that all the screws are in the right place and none are missing.
- Make sure that the screws, nuts, stacking pins, connection rods, mounting plate and all the components are not bended, damaged, or broken.

If any parts are broken or missing stop using the product, please contact the seller so he can provide the spare parts.

Bottom view:

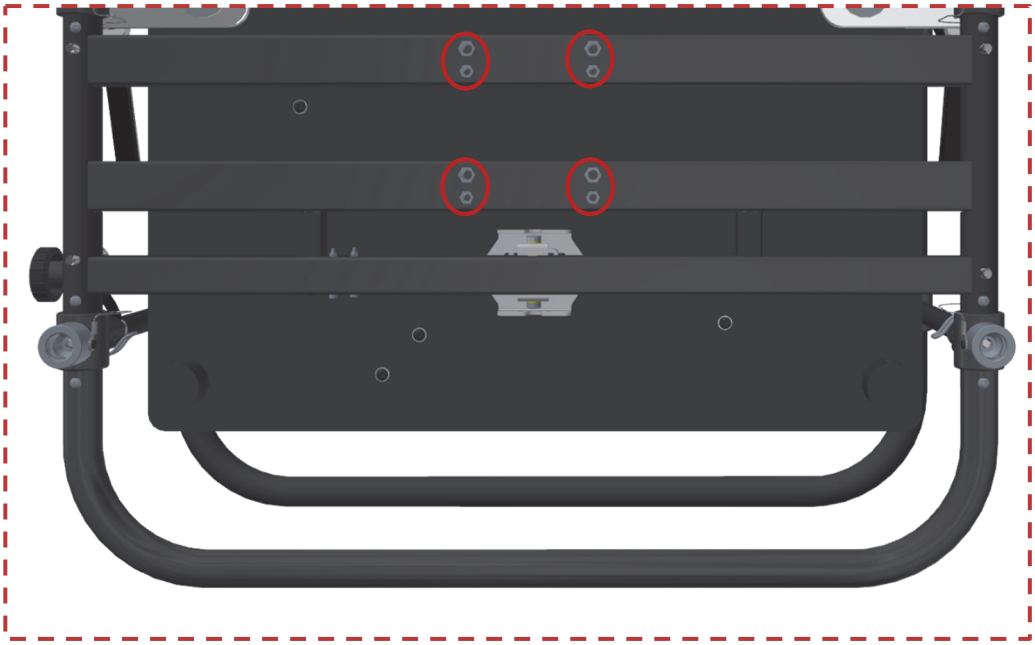

Figure 23 Nuts on front bottom side which are sealed with red colour wax

Top view:

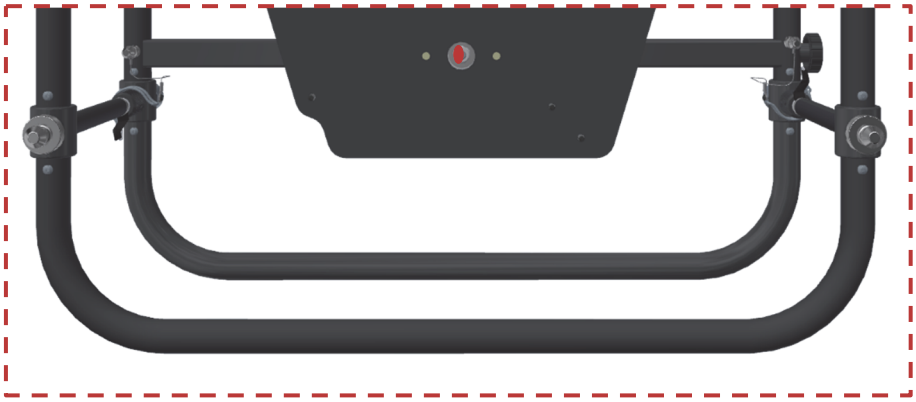

Figure 24 Nut on centre top side which is sealed with red colour wax

- On the three screws + nuts presented on the above two pictures (Figure 23 and Figure 24) red color sealing wax was applied to be sure that the nuts will always be on the same position and no one will try to tighten or loose them.

Do not try to manipulate these nuts, because the adjustment mechanism can be blocked and accidents can occur!

If one notices that the sealing wax is broken or the nut is moved stop using the product, please contact the manufacturer!

Except for the three nuts described on the previous section (see Figure 23 and Figure 24), please control, with corresponding tool, that all the other screws are properly tightened.

14.3 Stacking points and locking pins

Make sure that all stacking points (four male stacking points on upside of the frame and four female stacking points on bottom side of the frame) are securly tighten in their position. This can be checked by hand, no extra tools are required. Also check that the stacking points do not show any damages such as dents, bending etc.
The two figures below show with red marking the stacking points at the topside (left picture) and the ones at the bottom side (right picture).

Figure 25 Stacking points topside

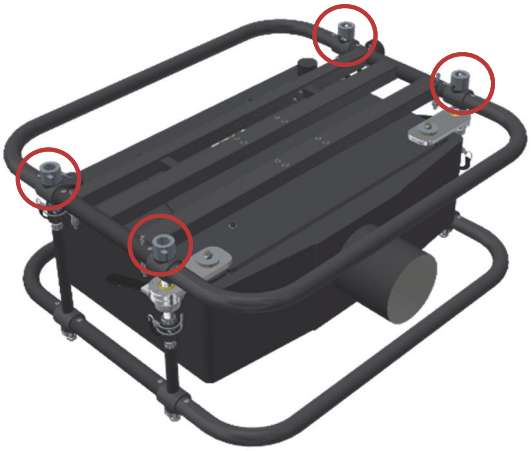

Figure 26 Stacking points bottom side

If one notices that the stacking points are not securely tighten or show any sort of damage, stop using the product and contact the manufacturer.

Make sure that all four locking pins are available next to the female stacking points at the bottom side of the frame. It is mandatory to use all four locking pins when frames are stacked (see also chapter 11. Stacking frames).

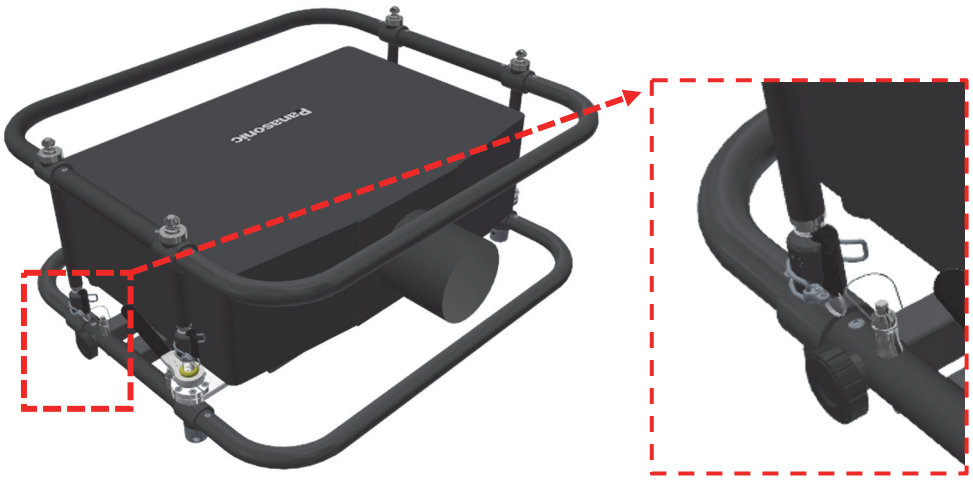

Figure 27 Locking pins at the frame

Make sure that all four locking pins do not show any sort of damage such as beeing bent, deformed or that no piece is missing (e.g. the ball spring). Furthermore ensure by testing the locking mechanism that it works fine. The locking mechanism is activated by pressing the back side of the locking pin. With this, the ball spring at the front should slide into the housing of the pin. Releasing the mechanism will make the ball spring slide back out. It is important that this works smoothly. The ball spring secures the locking pin inside its designated position.

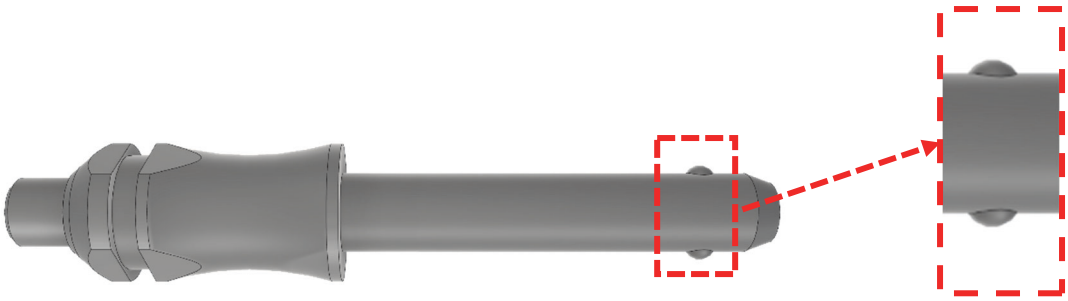

Figure 28 Locking pin – the ball spring

Do not keep using a frame with damaged or faulty working locking pins! Contact the manufacturer!

Do not exchange broken or malfunctioning parts with ones that are not accredited by the manufacturer because serious injuries and property damage can occur!

The inspection must be done by a qualified person!

14.4 Screws and safety washers securing the projector in the frame

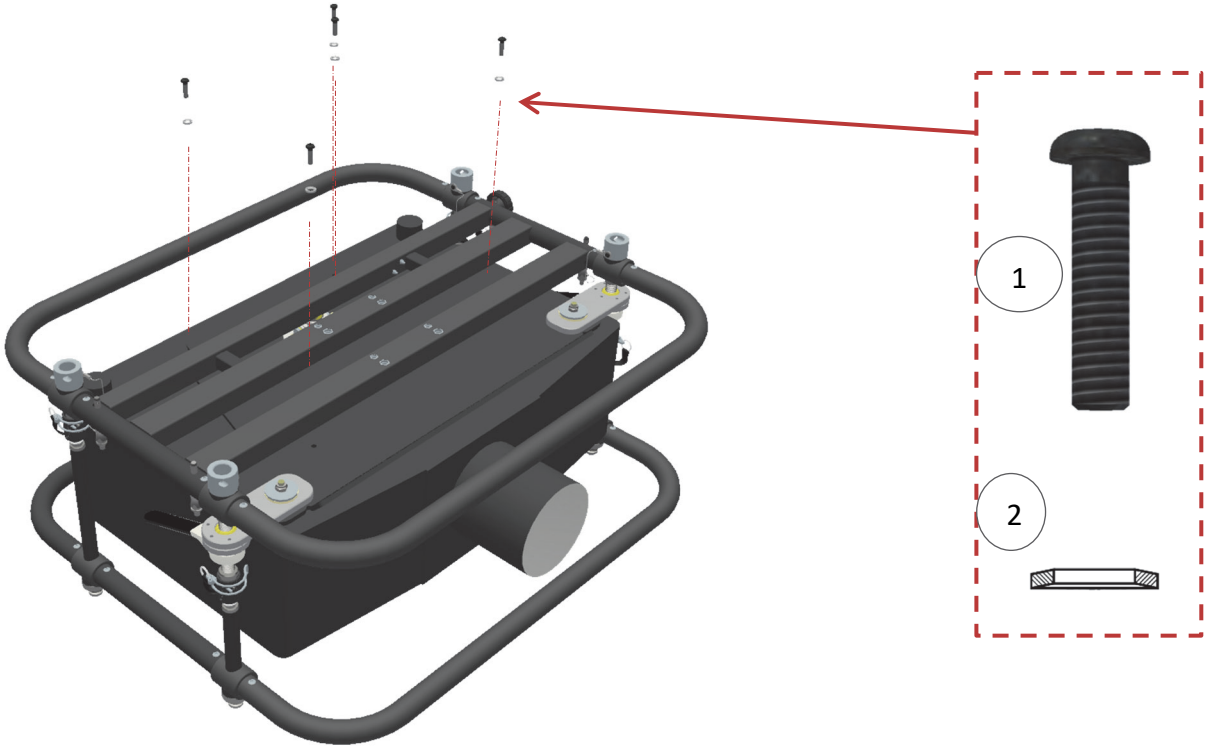

Make sure all correct screws and safety washers are in the correct position and securely fasten. For further details see chapter 7. Installing the projectors into the frame.

15. Disposal of components

15.1 Metal parts and packaging

All metal parts and packaging can be recycled.

15.2 Disposal of entire devices

You have the possibility to send old devices back to us. Please note that you have to take over the transportation costs for this. Please send the devices to:

EXACT solutions GmbH

Lustheide 85

51427 Bergisch Gladbach

GERMANY

16. Declaration of Conformity

EC - Declaration of Conformity

We hereby confirm that the following described lifting accessory in its conception, construction and form put by us in circulation is in full accordance with all relevant health and safety requirements and complies with the following EC-directive:

2006 / 42 / EG (EG-Machinery Directive)

This declaration is no longer valid if the lifting accessory is modified without our written consent.

Manufacturer:

EXACT solutions GmbH
Lustheide 85
D - 51427 Bergisch Gladbach
Tel.: +49 2204 9485 30

Description of the lifting accessory:

- Function: Rigging frame for PANASONIC projectors series such as: **PT-MZ16KL, PT-MZ10KL, PT-MZ13KL,** and other compatible projectors.
- Type/model: **FRAME-EVO-P14 or FRAME-EVO-P14-US**
- Serial number: **FE-P14XX.YYYYY or FE-P14XX.US.YYYYY**
- Year of construction: 2019

The applied harmonized EN - standards include:

- **DIN EN ISO 1200:2010** Safety of machinery – General principles for design – Risk assessment and risk reduction

Further applied standards and regulations include:

- **DIN EN 1991-1** **DE:** Eurocode 1: Einwirkungen auf Tragwerke (12/2010)
  EN: Eurocode 1: Actions on structures (12/2010)
- **DIN EN 1993 -1** **DE:** Eurocode 3: Bemessung und Konstruktion von Stahlbauten (12/2010)
  EN: Eurocode 3: Design of steel structures (12/2010)
- **DIN EN 1999 -1** **DE:** Eurocode 9: Bemessung und Konstruktion von Aluminiumtragwerken (05/2010)
  EN: Eurocode 9: Design of aluminum structures (05/2010)
- **DGUV V17/18** **DE:** UVV Veranstaltungs- und Produktionsstätten für szenische Darstellung, Stand Januar 2011 (bisher: BGV C1)
  EN: Accident Prevention Regulation for Staging and Production Facilities for the Entertainment Industry (formerly BGV C1)
- **DGUV 315-390** **DE:** Grundsätze für die Prüfung maschinentechnischer Einrichtungen in Bühnen und Studios (bisher: BGG/GUV-G 912)
  EN: Fundamentals for testing in stages and studios of the mechanical equipment (formerly BGG/GUV-G 912)
- **BGI 810-3** **DE:** Lasten über Personen. Sicherheit bei Produktionen und Veranstaltungen von Fernsehen, Hörfunk, Film, Theater, Messen, Veranstaltungen
  EN: Safety at Productions and Events – Loads Suspended above Persons

Bergisch Gladbach, 2nd of January 2020

Signature:

(Tobias Schwirten, Managing Director, EXACT solutions GmbH)

Imprint

EXACT solutions GmbH

Lustheide 85

51427 Bergisch Gladbach

GERMANY

Tel.: +49 2204 9485 30

E-Mail: info@exactsolutions.de

Web: www.exactsolutions.de