KS21i

owner's manual (EN)

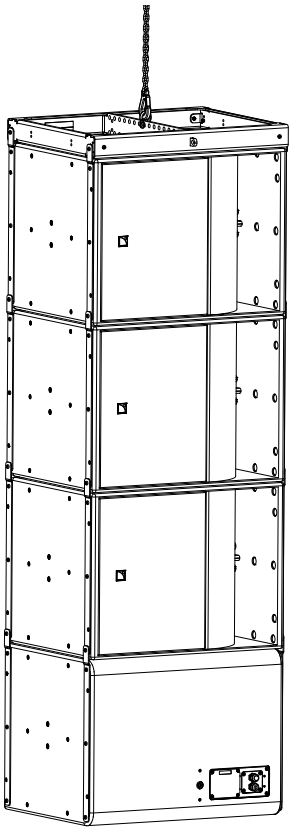

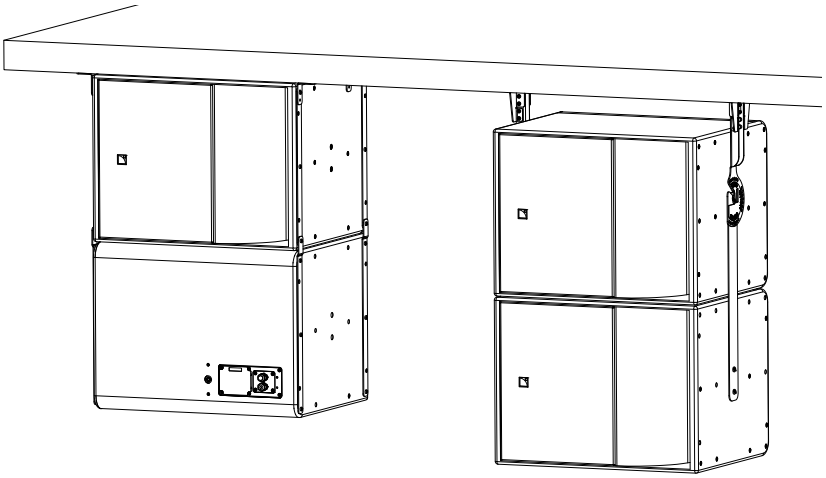

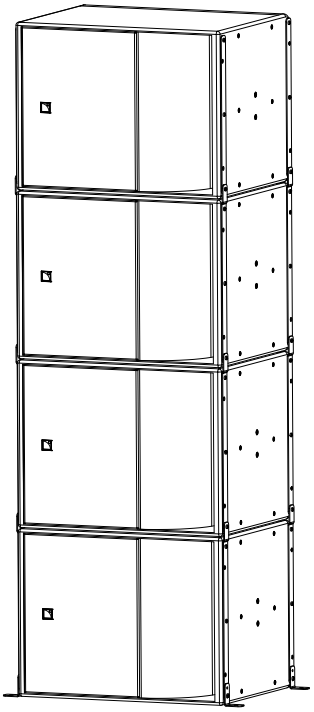

Document reference: KS21i owner's manual (EN) version 2.1
Distribution date: May 25, 2021
© 2021 L-Acoustics. All rights reserved.
No part of this publication may be reproduced or transmitted in any form or by any means without the express written consent of the publisher.

Contents

Safety....5
Instructions....5
Introduction....7
KS21i compact reference subwoofer....7
How to use this manual....7
System components....9
Loudspeaker cables....10
Rigging elements....10
Rigging plates....11
Electro-acoustical description....12
Preset description....12
Connectors....12
Rigging system description....13
KS21i....13
Rigging elements....15
A15i-BUMP....15
A-U15i....17
Ai-FIXBRACKET....19
Front screens....20
Mechanical safety....23
Loudspeaker configurations....25
KS21i in standard configuration....25
KS21i in cardioid configuration....26
Inspection and preventive maintenance....27
How to do preventive maintenance....27
Rigging part inspection....28
Mechanical system overview....28
Acoustical check....32
Rigging procedures....36
General principles....36
Tools....38
Flying....39
Flying a vertical array with A15i-BUMP....39

Wall-mounting or ceiling-mounting..... 43
Mounting an assembly with A-U15i..... 43
Mounting an assembly on a ceiling with Ai-FIXBRACKET..... 48
Stacking..... 52
Stacking KS21i..... 52
Securing a screen..... 55

Connection to LA amplified controllers..... 57
Cabling schemes..... 57
Cabling..... 59

Corrective maintenance..... 63
KS21i..... 63

Specifications..... 68

APPENDIX A: Configurations with A-U15i..... 74

APPENDIX B: Recommendation for speaker cables..... 76

APPENDIX C: Specifications for custom rigging systems..... 77

Safety

Instructions

Inspect the system before any deployment.

Perform safety related checks and inspections before any deployment.

Perform preventive maintenance at least once a year.

Refer to the preventive maintenance section for a list of actions and their periodicity.

Insufficient upkeep of the product can void the warranty.

If any safety issue is detected during inspection, do not use the product before performing corrective maintenance.

Check for issues. A rigging system part or fastener is missing or loose. A rigging system part exhibits: bends, breaks, broken parts, corrosion, cracks, cracks in welded joints, deformation, denting, wear, holes. A safety cue or label is missing.

Never incorporate equipment or accessories not approved by L-Acoustics.

Read all the related PRODUCT INFORMATION documents shipped with the products before exploiting the system.

Do not store the product on an unstable cart, stand, tripod, bracket, or table.

Beware of sound levels.

Do not stay within close proximity of loudspeakers in operation.

Loudspeaker systems are capable of producing very high sound pressure levels (SPL) which can instantaneously lead to permanent hearing damage to performers, production crew and audience members. Hearing damage can also occur at moderate level with prolonged exposure to sound.

Check the applicable laws and regulations relating to maximum sound levels and exposure times.

Work with qualified personnel for rigging the system

Installation should only be carried out by qualified personnel that are familiar with the rigging techniques and safety recommendations outlined in this manual.

Ensure personnel health and safety

During installation and set-up personnel must wear protective headgear and footwear at all times. Under no circumstances is personnel allowed to climb on a loudspeaker assembly.

Respect the Working Load Limit (WLL) of third party equipment.

L-Acoustics is not responsible for any rigging equipment and accessories provided by third party manufacturers.

Verify that the Working Load Limit (WLL) of the suspension points, chain hoists and all additional hardware rigging accessories is respected.

Respect the maximum configurations and the recommended safety precautions.

For safety issue, respect the maximum configurations outlined in this manual. To check the conformity of any configuration in regards with the safety precautions recommended by L-Acoustics, model the system in Soundvision and refer to the warnings in Mechanical Data section.

Be cautious when flying a loudspeaker configuration.

Before installing/raising the product, check each individual element to make sure that it is securely fastened to the adjacent element. Always verify that no one is standing underneath the product when it is being installed/raised. Never leave the product unattended during the installation process.

As a general rule, L-Acoustics recommends the use of secondary safety at all times.

Be cautious when ground-stacking a loudspeaker array.

Do not stack the loudspeaker array on unstable ground or surface. If the array is stacked on a structure, platform, or stage, always check that the latter can support the total weight of the array.

As a general rule, L-Acoustics recommends the use of safety straps at all times.

Risk of falling objects

Verify that no unattached items remain on the product or assembly.

Risk of tipping

Remove all rigging accessories before transporting a product or an assembly.

Take into account the wind effects on dynamic load.

When a loudspeaker assembly is deployed in an open air environment, wind can produce dynamic stress to the rigging components and suspension points.

If the wind force exceeds 6 bft (Beaufort scale), lower down and/or secure the product or the assembly.

Intended use

This system is intended for use by trained personnel for professional applications.

As part of a continuous evolution of techniques and standards, L-Acoustics reserves the right to change the specifications of its products and the content of its documents without prior notice.

Check www.l-acoustics.com on a regular basis to download the latest document and software updates.

Long term exposure to extreme conditions may damage the product.

For more information, refer to the **Products weather protection** document, available on the website.

Read the maintenance section of this document before servicing the product.

Contact L-Acoustics for advanced maintenance.

Any unauthorized maintenance operation will void the product warranty.

This marking indicates that this product should not be disposed of with other household waste throughout the EU. To prevent possible harm to the environment or human health from uncontrolled waste disposal, recycle it responsibly to promote the sustainable reuse of material resources. To return your used device, please use the return and collection systems or contact the retailer where the product was purchased. They can take this product for environmentally safe recycling.

Introduction

KS21i compact reference subwoofer

KS21i is a compact reference subwoofer designed to extend the bandwidth of A15i and A10i systems in installation applications. KS21i features one high excursion, direct-radiating 21'' transducer mounted in a bass-reflex tuned enclosure.

KS21i couples with A15i and A10i to reinforce contour and extend bandwidth to 29 Hz and 31 Hz respectively. KS21i features L-Vents that substantially reduce turbulence and port noise at high levels while also increasing LF efficiency. The association of modern components and laminar vents greatly improves short-term SPL compared to similar-sized subwoofers.

The KS21i frequency response is optimized to couple perfectly with both A Series install systems. KS21i can be flown and stacked in combination with A15i or A10i to form a full range line source.

KS21i can be deployed in standard or cardioid configurations with dedicated presets, for flown and stacked deployment.

How to use this manual

The KS21i owner's manual is intended for all actors involved in the system design, implementation, preventive and corrective maintenance of the KS21i system. It must be used as follows:

1. Read the technical description for an overview of all system elements, their features, and their compatibilities.
   - Electro-acoustical description (p.12)
   - Rigging system description (p.13)
2. Prepare the system configuration. Consider the mechanical limits and the available acoustical configurations.
   - Mechanical safety (p.23)
   - Loudspeaker configurations (p.25)
3. Before rigging the system, perform mandatory inspections and functional checks.
   - Inspection and preventive maintenance (p.27)
4. To deploy the system, follow the step-by-step rigging instructions and refer to the cabling schemes.
   - Rigging procedures (p.36)
   - Connection to LA amplified controllers (p.57)

The Corrective maintenance (p.63) section contains the operations authorized for the end user.
Performing another operation exposes to hazardous situations.
For advanced maintenance, contact your L-Acoustics representative.

As part of a continuous evolution of techniques and standards, L-Acoustics reserves the right to change the specifications of its products and the content of its document without prior notice. Please check www.l-acoustics.com on a regular basis to download the latest document and software updates.

Contact information

For information on advanced corrective maintenance:
- contact your Certified Provider or your L-Acoustics representative
- for Certified Providers, contact the L-Acoustics customer service: customer.service@l-acoustics.com

Symbols

The following symbols are used in this document:

This symbol indicates a potential risk of harm to an individual or damage to the product.
It can also notify the user about instructions that must be strictly followed to ensure safe installation or operation of the product.

This symbol notifies the user about instructions that must be strictly followed to ensure proper installation or operation of the product.

This symbol notifies the user about complementary information or optional instructions.

System components

Loudspeaker enclosures

KS21i	High power compact subwoofer: 1 x 21" (installation version)

Powering and driving system

LA2Xi / LA4X / LA8 / LA12X	Amplified controller with DSP, preset library and networking capabilities

Refer to the LA2Xi / LA4X / LA8 / LA12X owner's manual for operating instructions.

Cables

speaker cable	2.5 mm^2 cable Speaker cable used to connect enclosures in parallel. Adapt the cable length to the installation.
custom 2-point speakON cable	2-point speakON cable (2.5 mm^2 gauge) to bare wire cable This cable needs to be custom made.

Information about the connection of the enclosures to the LA amplified controllers is given in this document.

Refer to the LA2Xi / LA4X / LA8 / LA12X owner's manual for detailed instructions about the whole cabling scheme, including modulation cables and network.

Rigging elements

Ai-FIXBRACKET	Fastening bracket for A15i, A10i and KS21i
KS21i-LINK	Rigging plates for KS21i
KS21i-ENDLINK	End rigging plates for KS21i
KS21i-ULINK	Rigging plates for flying two KS21i with A-U15i
A15i-BUMP	Flying frame for vertical deployment of A15i and KS21i
A-U15i	U-bracket for A15i and KS21i
CLAMP250	Clamp certified for 250 kg

Transportation accessories

KS21i-SCREEN	Acoustically transparent front screen for KS21i

Software applications

Soundvision	3D acoustical and mechanical modeling software
LA Network Manager	Software for remote control and monitoring of amplified controllers

Refer to the **Soundvision** help.
Refer to the **LA Network Manager** help.

Loudspeaker cables

2.5 mm^2 cable

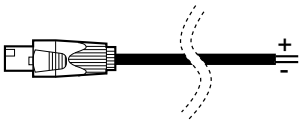

2-point speakON cable (2.5 mm^2 gauge) to bare wire cable

This cable needs to be custom made.

Rigging elements

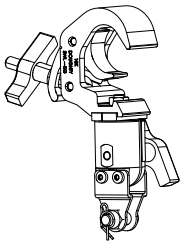

CLAMP250

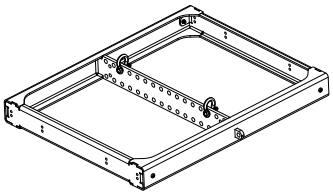

A15i-BUMP

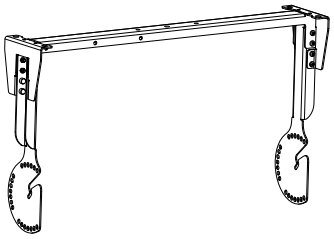

A-U15i

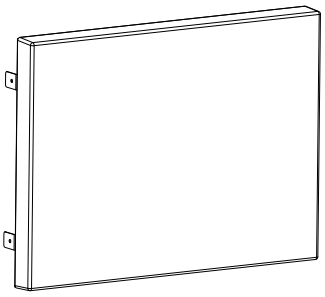

KS21i-SCREEN

Rigging plates

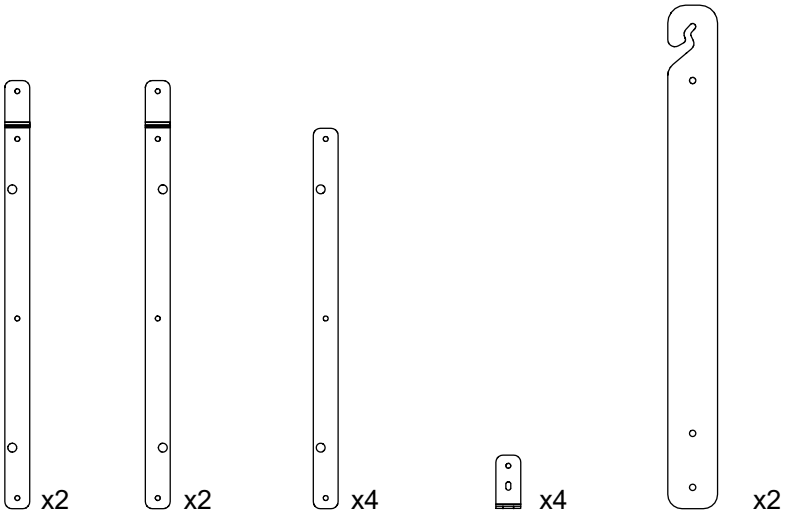

KS21i-LINK

Rigging plates for KS21i

KS21i-ENDLINK

End rigging plates for KS21i

Ai-FIXBRACKET

Fastening brackets for KS21i, A10i and KS21i

KS21i-ULINK

Rigging plates for flying two KS21i with A-U15i

Electro-acoustical description

Preset description

[KS21_60]

outputs	channels	routing	gain	delay	polarity	mute
OUT 1	SB	IN A	0 dB	0 ms	+	ON
OUT 2	SB	IN A	0 dB	0 ms	+	ON
OUT 3	SB	IN A	0 dB	0 ms	+	ON
OUT 4	SB	IN A	0 dB	0 ms	+	ON

[KS21_60_C] [KS21_60_Cx]

loudspeaker elements	outputs	channels	routing	gain	delay	polarity	mute
SR	OUT 1	SR	IN A	0 dB	0 ms	+	ON
SB	OUT 2	SB					ON
SB	OUT 3	SB					ON
SB	OUT 4	SB					ON

Connectors

Each set of terminal block connectors (+ and –) can be used interchangeably as IN or LINK connector.

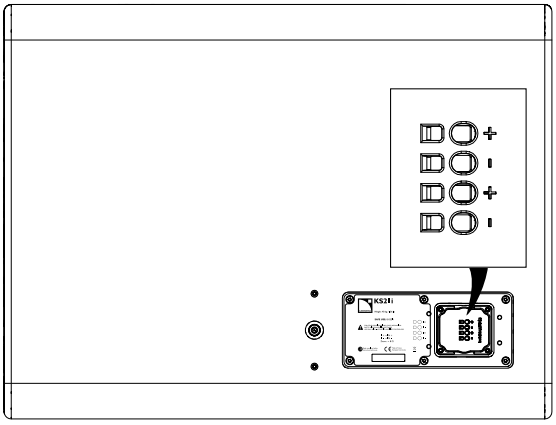

KS21i

1 × 4-point terminal block with push-in connection

Internal pinout for L-Acoustics subwoofers

terminal block points	IN +	IN -
Transducer connectors	LF +	LF -

Rigging system description

KS21i

KS21i is compatible with four types of rigging plate kits:

- standard rigging plates

(KS21i-LINK)

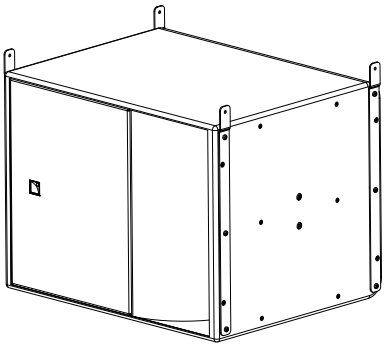

- S-shaped standard rigging plates

(KS21i-SLINK)

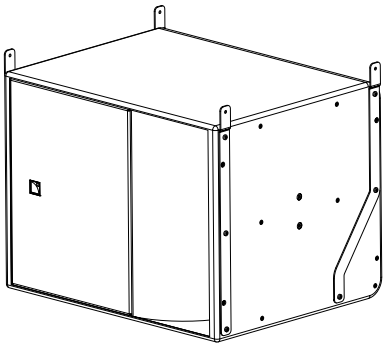

- end rigging plates

(KS21i-ENDLINK)

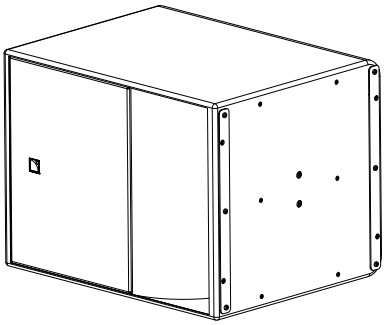

- S-shaped end rigging plates

(KS21i-ENDSLINK)

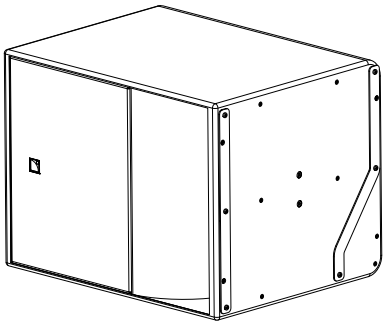

KS21i features 18 inserts on each side:

- 12 M6 inserts for flown configurations with a rigging frame.
- Two M8 inserts for wall-mounting or ceiling-mounting with a bracket.
- Four M6 inserts for securing a screen in standard or cardioid configuration.

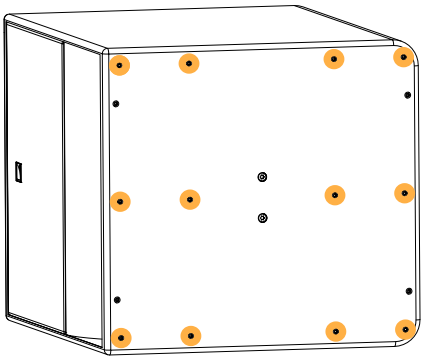

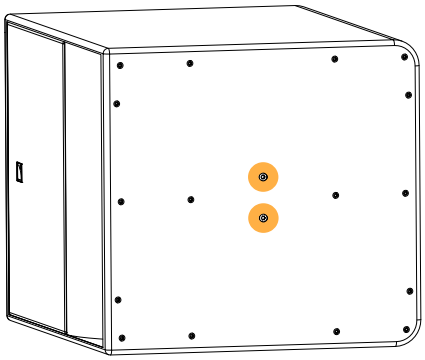

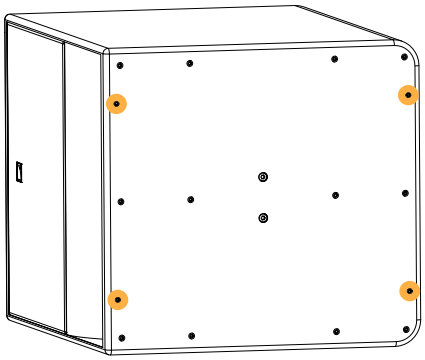

The inserts are fitted with placeholder screws.

Rigging screws

Only use the rigging screws provided by L-Acoustics.

Do not use the placeholder screws for rigging.

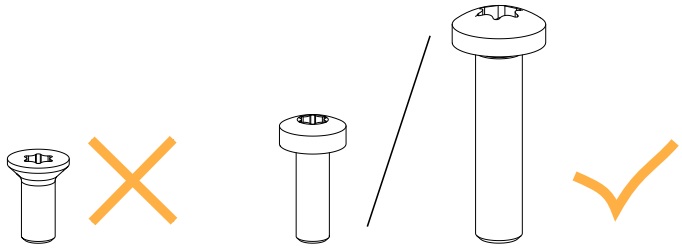

Always put the placeholder screws back in place to avoid leaks.

Rigging elements

A15i-BUMP

A15i-BUMP is a reversible rigging frame for flying vertical arrays of KS21i.

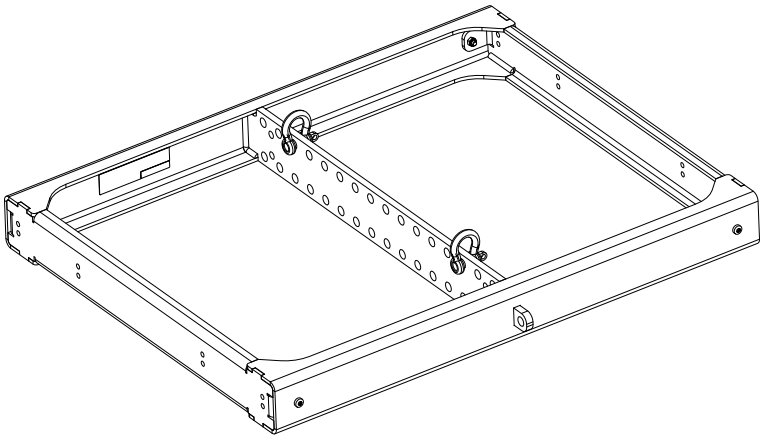

A15i-BUMP is secured to the array with four M6x18 rigging screws and M6 nuts (provided).

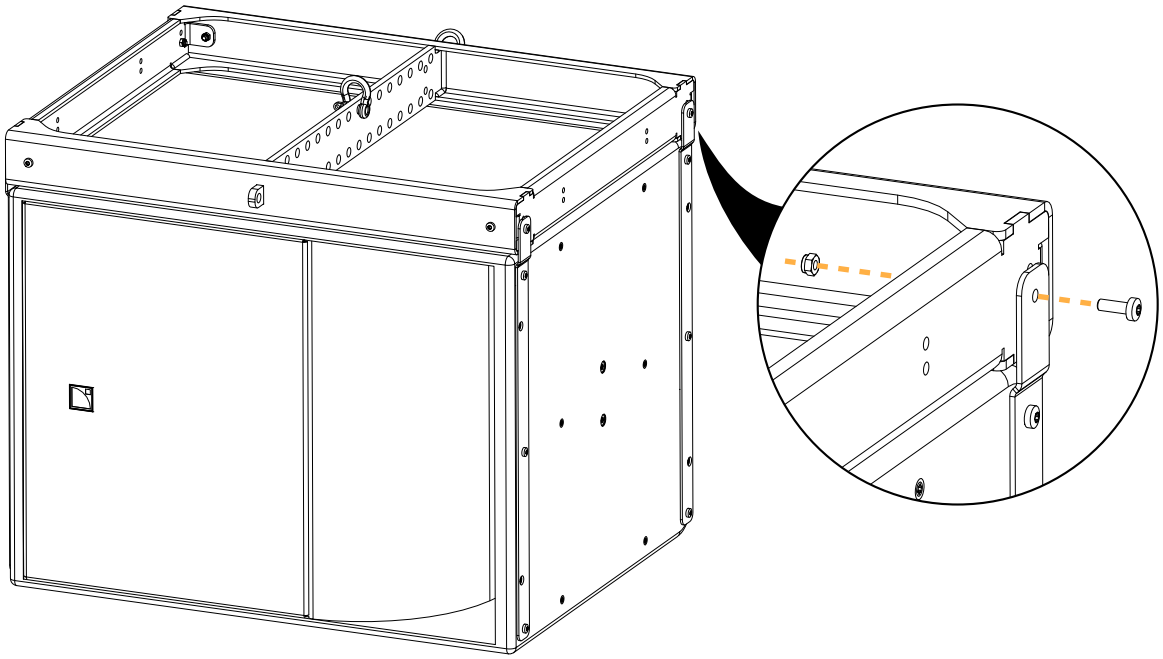

Multiple pickup points are available for site angle adjustments: 16 pickup points on each side, one front pickup point (F), and one rear pickup point (R). They are compatible with Ø12 mm shackles WLL 1 t (two provided) and CLAMP250.

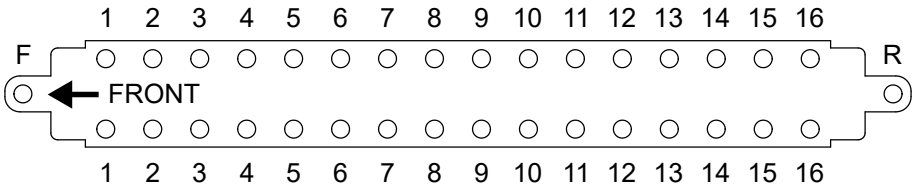

A15i-BUMP can be used as the main lifting accessory for flying vertical arrays of KS21i with one or two lifting points.

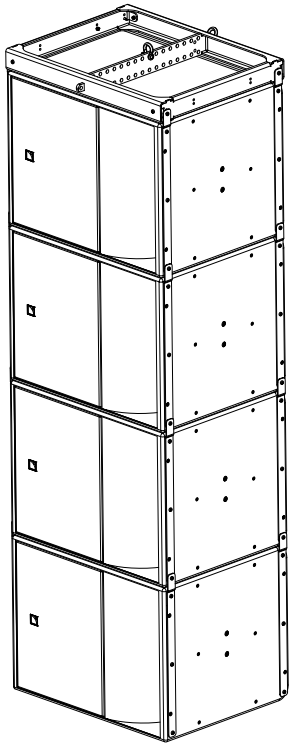

A-U15i

A-U15i is a U-bracket for mounting KS21i on a ceiling, a wall, or a truss.

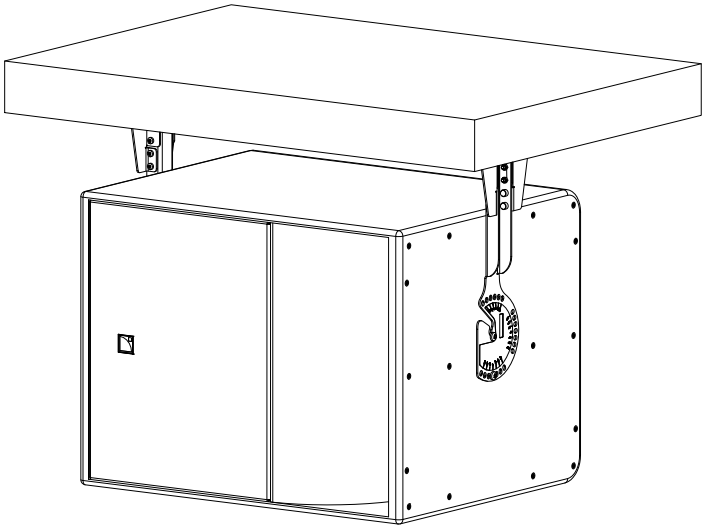

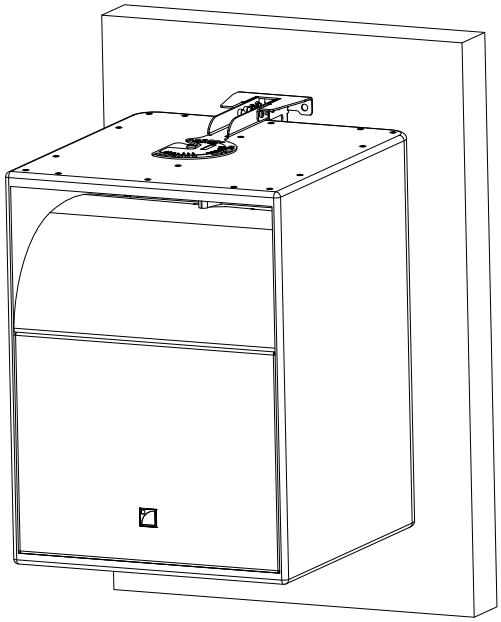

In combination with KS21i-ULINK, A-U15i can be used to mount or fly vertical arrays of two KS21i.

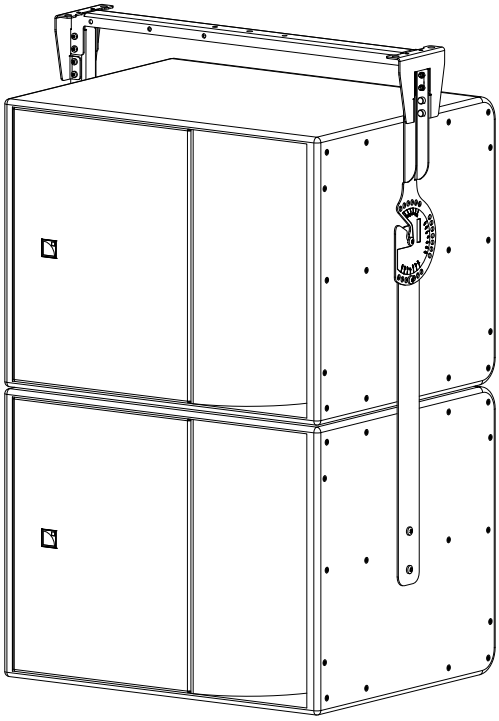

A-U15i is secured to each side of the enclosure by two M8 screws: the central screw and the angulation screw.

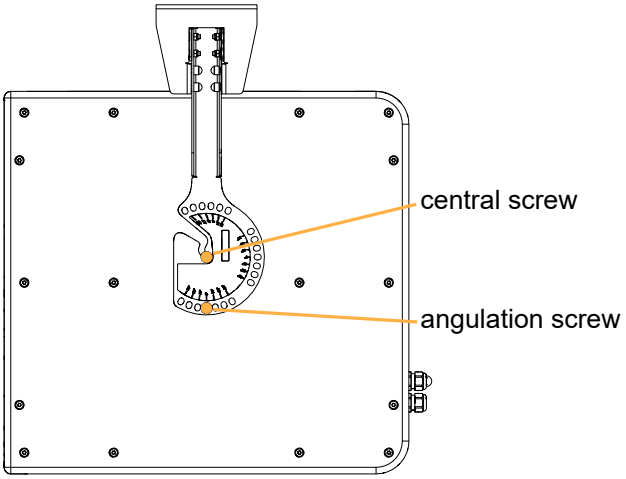

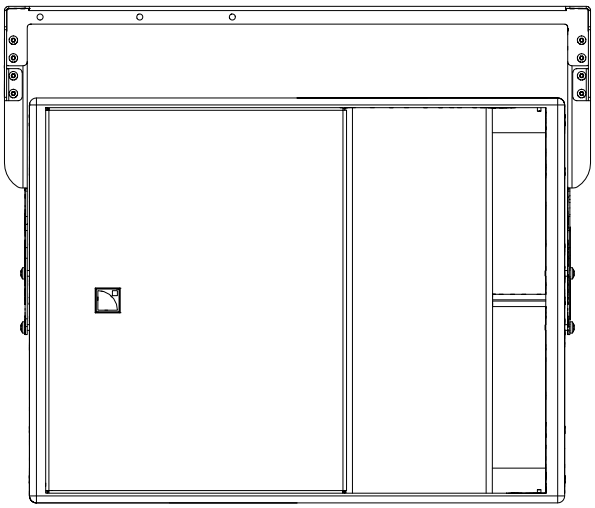

Position the central screw in the bottom insert to reduce space between the enclosure and the ceiling.

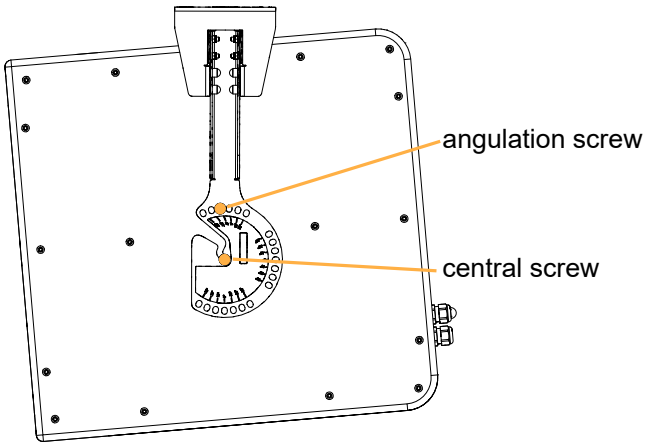

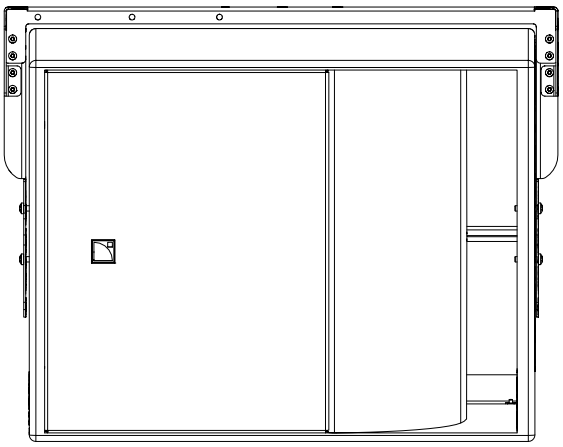

The angle can be set between -30° and +30° in 10° steps. Refer to the label to position the angulation screw.

See APPENDIX A: Configurations with A-U15i (p.74) for a list of authorized configurations.

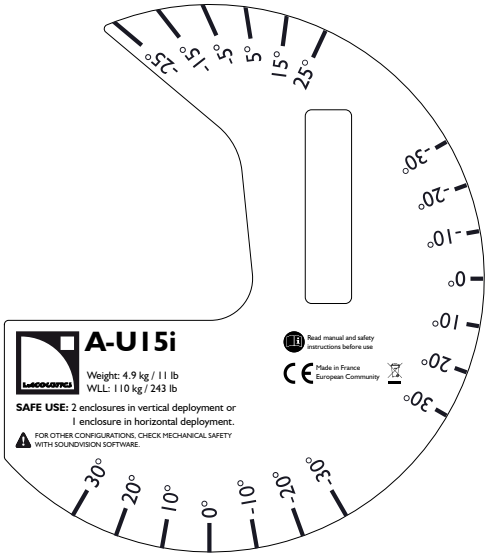

A-U15i must be secured to the supporting fixture with four M10 screws or a truss clamp.

Fasteners for wall-mounting or ceiling-mounting

Select screw length and anchors applicable to the wall or ceiling properties.

Ai-FIXBRACKET

Ai-FIXBRACKET is a set of four fastening brackets for KS21i. The enclosure is secured to Ai-FIXBRACKET using the slotted hole.

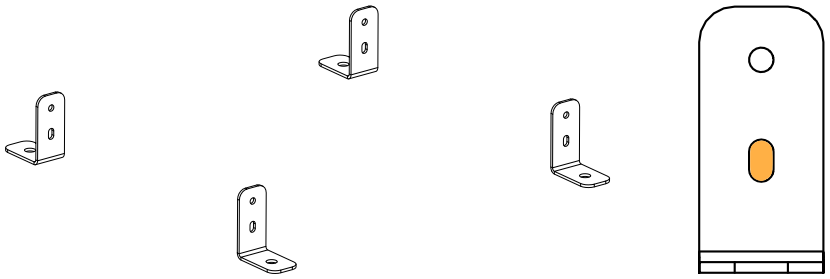

Secure Ai-FIXBRACKET at the bottom of an array to improve stability.

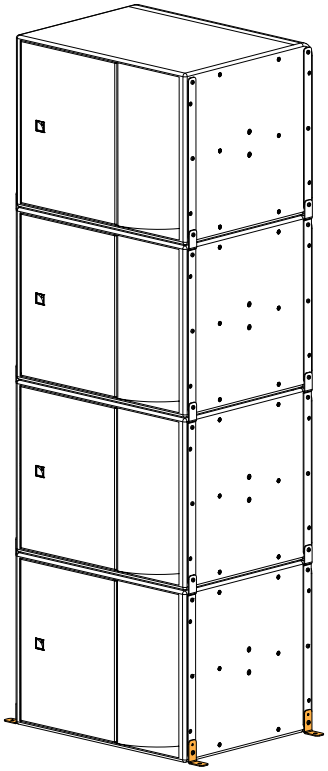

Ai-FIXBRACKET can also be used to mount up to two KS21i under the ceiling.

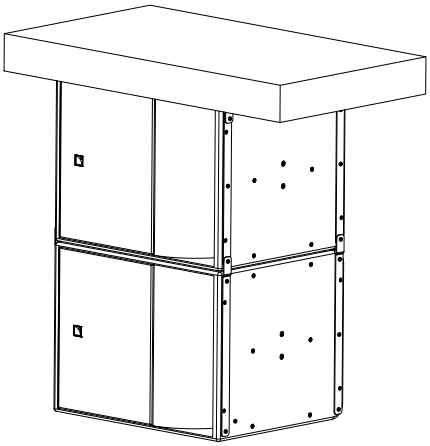

Ai-FIXBRACKET must be secured to the supporting fixture with four M10 screws.

Fasteners for wall-mounting or ceiling-mounting
Select screw length and anchors applicable to the wall or ceiling properties.

Front screens

The KS21i system features an acoustically transparent front screen suitable for every configuration.

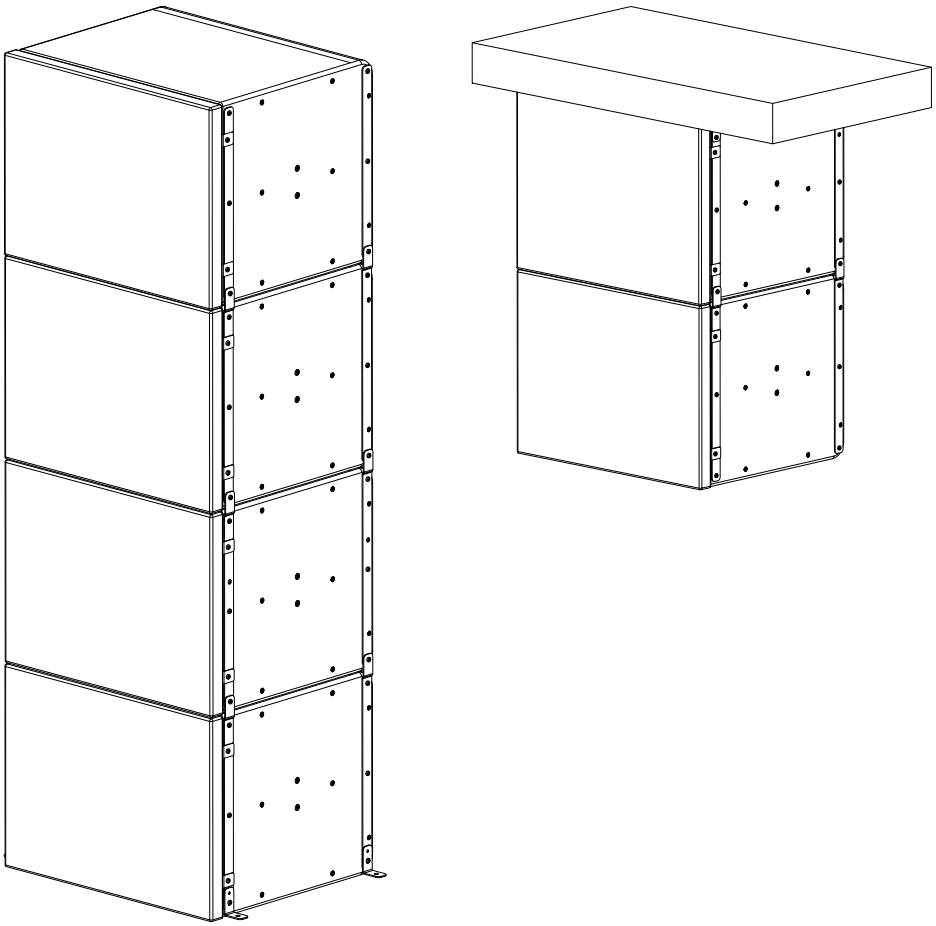

The screens are secured on top of the rigging plates with four M6 rigging screws:

- Two M6x20 screws on the vent side.
- Two M6x55 screws on the grill side. These two screws are secured in place of the grill screws.

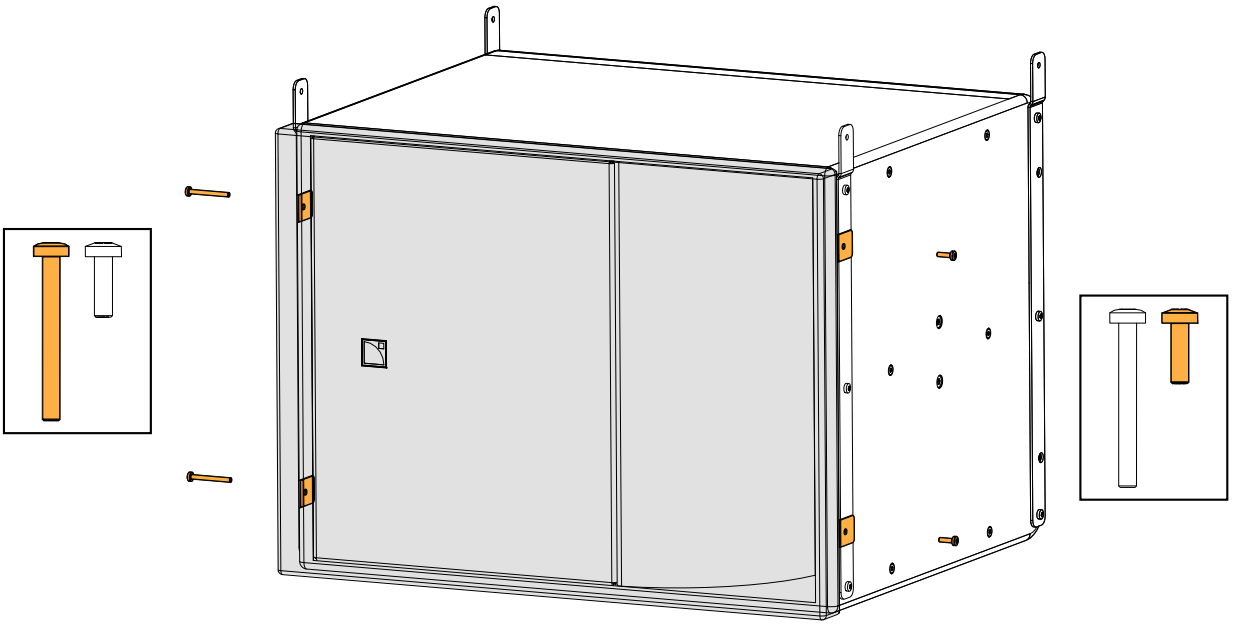

The screws of the grill and the placeholder screws on the fins side can be removed through the rigging plates.

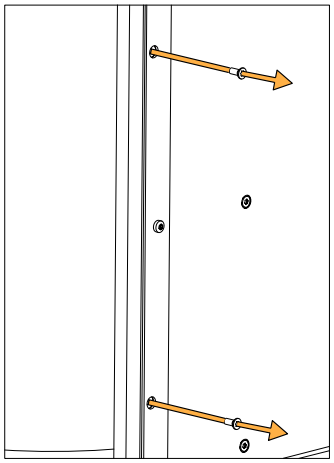

The screens are equipped with tabs to hold the grill in place when securing the screen on the enclosure.

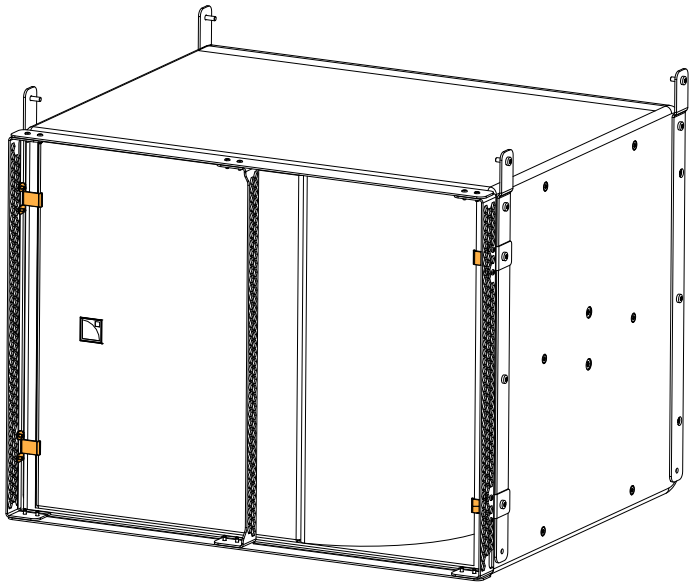

KS21i-SCREEN can be secured to the back of KS21i when used in cardioid configuration. The cable(s) can be passed through a cutout on the screen side.

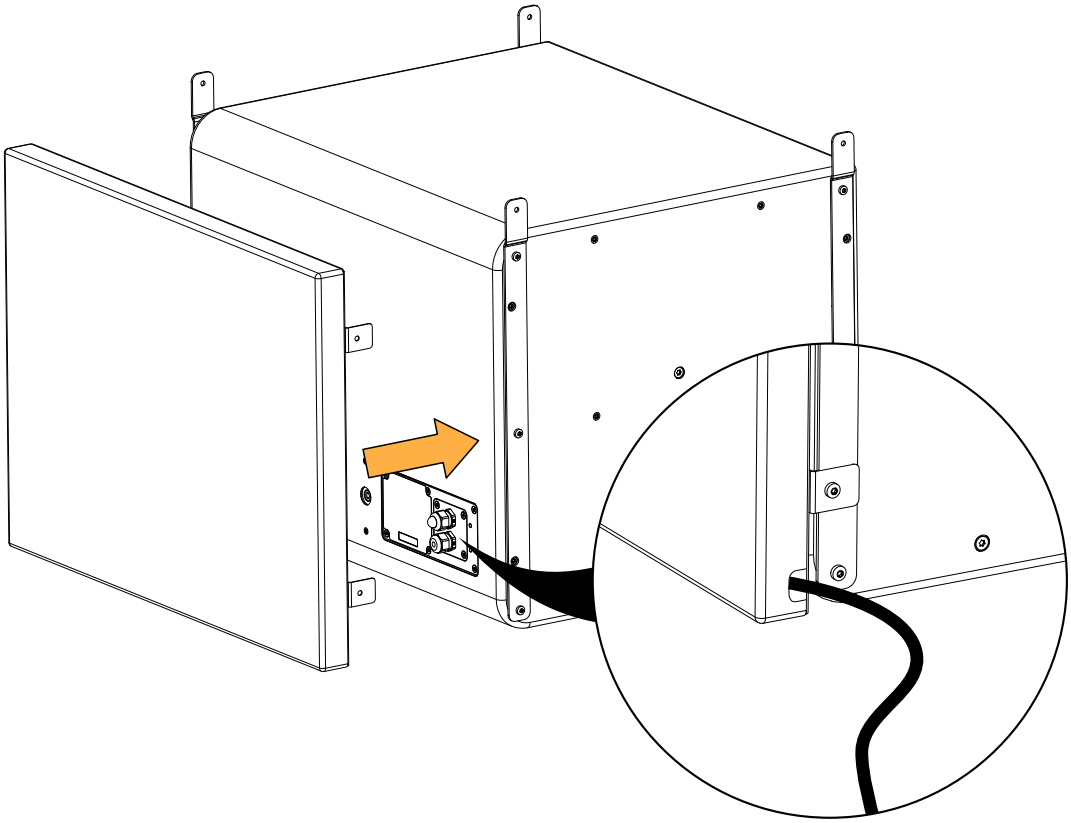

Mechanical safety

Flown configurations

The KS21i rigging system complies with 2006/42/EC: Machinery Directive. It has been designed following the guidelines of BGV-C1.

2006/42/EC: Machinery Directive specifies a safety factor of 4 against the rupture. The flown deployments described in this manual achieve a safety factor of **4 or more**.

Refer to Soundvision for the safety factor of a specific deployment.

The **safe limit** gives the maximum number of elements for which the safety factor is compliant with the 2006/42/EC: Machinery Directive, within the use defined in this manual and regardless of the other deployment parameters (site angles, inter-element angles, etc.).

The **maximum limit** gives the maximum number of elements for which the safety factor can be compliant with the 2006/42/EC: Machinery Directive, when the other deployment parameters provide the best mechanical conditions.

For mixed arrays refer to your Soundvision model.

KS21i

configuration	rigging accessory	safe limit	maximum limit
Vertical array	A15i-BUMP + rigging plates	8	16
	A-U15i	1	
	A-U15i + KS21i-ULINK	2	
Wall-mounted (horizontal)	A-U15i	1	
	A-U15i + KS21i-ULINK	2	
Wall-mounted (vertical)	A-U15i	1	
Ceiling-mounted	A-U15i + KS21i-ULINK or Ai-FIXBRACKET + rigging plates	2	

Other configurations

For other configurations, respect the recommended maximum limit for optimal stability.

KS21i

configuration	rigging accessory	maximum / safe limit
Stacked vertical array with or without Ai-FIXBRACKET	Ai-FIXBRACKET (optional) + rigging plates	4

Assessing mechanical safety

Mechanical safety of the rigging system

Before any installation, always model the system in Soundvision and check the **Mechanical Data** section for any stress warning or stability warning.

In order to assess the actual safety of any array configuration before implementation, refer to the following warnings:

Rated working load limit (WLL) is not enough

The rated WLL is an indication of the element resistance to tensile stress. For complex mechanical systems such as loudspeaker arrays, WLLs cannot be used per se to determine the maximum number of enclosures within an array or to assess the safety of a specific array configuration.

Maximum pullback angle

If a pullback accessory is available, the pullback angle must not exceed a 90° negative site angle.

Mechanical modeling with Soundvision

The working load applied to each linking point, along with the corresponding safety factor, will depend on numerous variables linked to the composition of the array (type and number of enclosures, splay angles) and the implementation of the flying or stacking structure (number and location of flying points, site angle). This cannot be determined without the complex mechanical modeling and calculation offered by Soundvision.

Assessing the safety with Soundvision

The overall safety factor of a specific mechanical configuration always corresponds to the lowest safety factor among all the linking points. Always model the system configuration with the Soundvision software and check the **Mechanical Data** section to identify the weakest link and its corresponding working load. By default, a stress warning will appear when the mechanical safety goes beyond the recommended safety level.

Safety of ground-stacked arrays in Soundvision

For ground-stacked arrays, a distinct stability warning is implemented in Soundvision. It indicates a tipping hazard when the array is not secured to the ground, stage or platform. It is the user's responsibility to secure the array and to ignore the warning.

Additional safety for flown arrays

When flying an array, use available holes to implement a secondary safety.

Considerations must be given to unusual conditions

Soundvision calculations are based on usual environmental conditions. A higher safety factor is recommended with factors such as extreme high or low temperatures, strong wind, prolonged exposition to salt water, etc. Always consult a rigging specialist to adopt safety practices adapted to such a situation.

Loudspeaker configurations

KS21i in standard configuration

Deployed in a standard configuration, a KS21i system operates with an omnidirectional directivity pattern over the nominal bandwidth of the KS21i enclosure.

The [KS21_60] and [KS21_100] factory presets provide the subwoofer system with an upper frequency limit at 60 Hz and 100 Hz respectively in order to optimize the acoustic coupling with a main full-range system.

The KS21i subwoofer is driven by the LA2Xi / LA4X / LA8 / LA12X amplified controller.

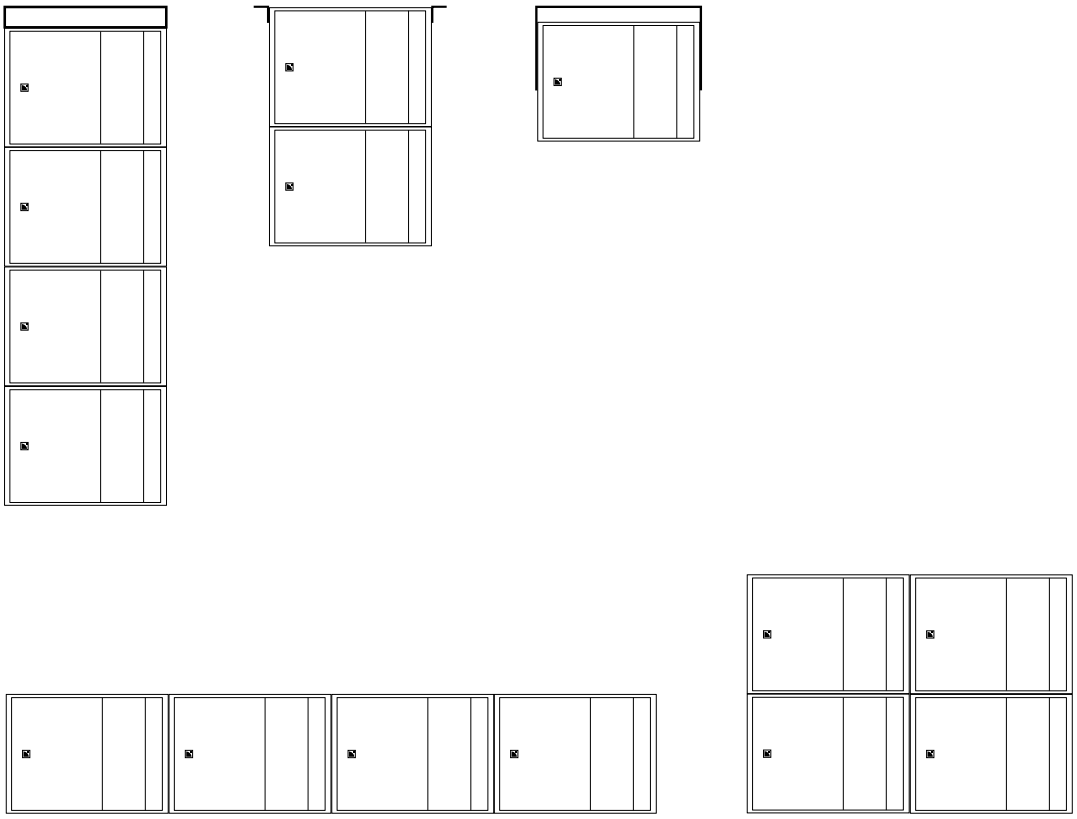

Preset	[KS21_60]	[KS21_100]
Low frequency limit	29 Hz	31 Hz

Delay values

When combining a line source with subwoofers, delays may have to be added to the presets.

Refer to the Preset Guide to obtain the pre-alignment delay values.

Grouping subwoofers

Place the subwoofer enclosures side by side. If not possible, the maximum distance between two adjacent acoustic centers must be 2.8 m or 1.7 m if the upper frequency limit of the subwoofer system is at 60 Hz or 100 Hz, respectively.

KS21i in cardioid configuration

Deployed in a cardioid configuration, a KS21i system produces a rear SPL rejection. The deployment consists of an array of four KS21i with one element turned towards the rear (reversed). Refer to the **Cardioid Configuration** technical bulletin for more information.

The [KS21_60_C] / [KS21_60_Cx], and [KS21_100_C] / [KS21_100_Cx] factory presets provide the subwoofer system with an upper frequency limit at 60 Hz and 100 Hz respectively in order to optimize the acoustic coupling with a main full-range system.

The KS21 subwoofer is driven by the LA2Xi / LA4X / LA8 / LA12X amplified controllers.

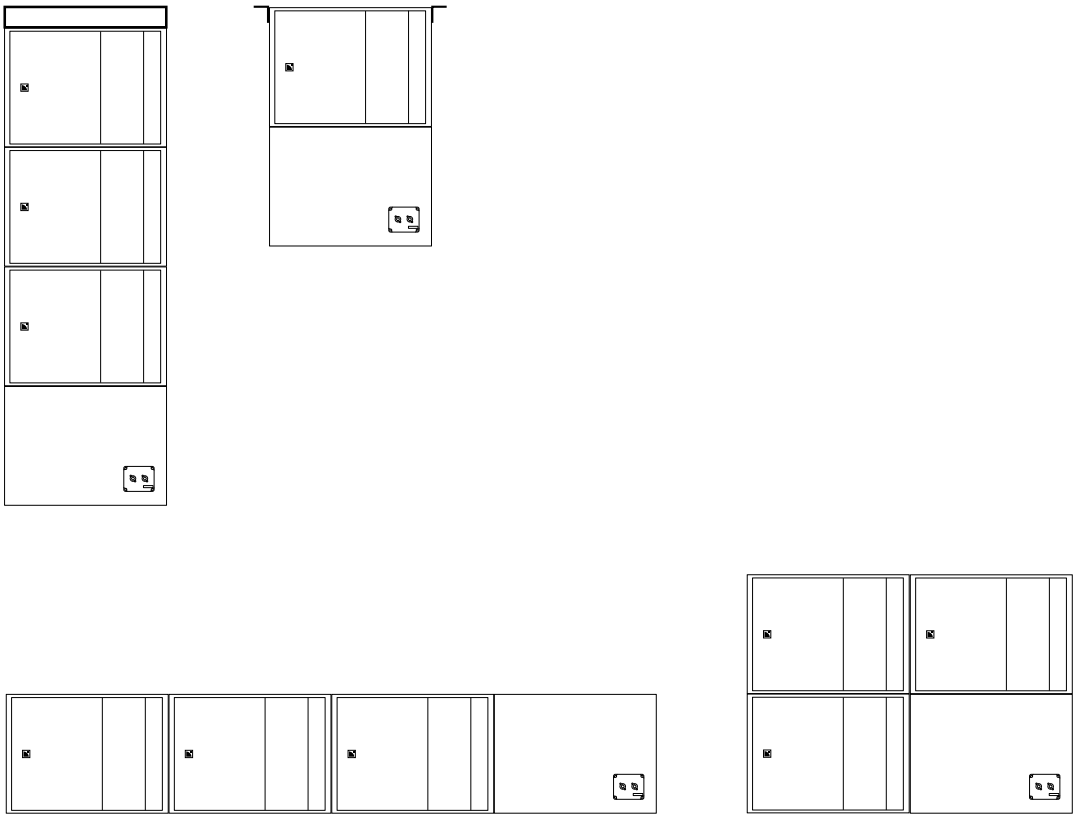

Preset	[KS21_60_C] / [KS21_60_Cx]	[KS21_100_C] / [KS21_100_Cx]
Low frequency limit	29 Hz	31 Hz

Delay values

When combining a line source with subwoofers, delays may have to be added to the presets.

Refer to the Preset Guide to obtain the pre-alignment delay values.

Grouping subwoofers

Place the subwoofer enclosures side by side. If not possible, the maximum distance between two adjacent acoustic centers must be 2.8 m or 1.7 m if the upper frequency limit of the subwoofer system is at 60 Hz or 100 Hz, respectively.

Inspection and preventive maintenance

How to do preventive maintenance

Inspect the system after any corrective maintenance operation.

Perform preventive maintenance at least once a year.

Refer to the maintenance manuals for advanced maintenance.

Rigging and hardware

Perform the Rigging part inspection (p.28) on each rigging part.

Use the Mechanical system overview (p.28) to identify critical parts of the system.

If any parts are damaged, contact your L-Acoustics representative for further instructions.

Acoustics

Perform the Enclosure check (p.32).

Perform the Listening test (p.34) to detect any degradation in sound quality.

If necessary, refer to the Corrective maintenance (p.63) section for speaker repair kits and maintenance instructions.

Rigging part inspection

About this task

The term "rigging part" comprises:

- lifting accessories such as clamps and shackles
- rigging accessories such as rigging frames, rigging interfaces, and brackets
- fasteners used for assembling two products together such as ball-locking pins, rigging axes, and safety pins
- rigging plates mounted on enclosures
- screens mounted on enclosures

This inspection procedure covers only L-Acoustics products. To inspect other products that are part of the lifting chain, refer to the manufacturer's instructions.

Prerequisite

Perform the inspection in a well-lit environment.

Procedure

1. Check that the rigging part is present.
2. Check for:
   - corrosion
   - wear and cracks
   - bends and dents
   - holes
   - missing safety cues
   - missing identification labels
   - missing or loose fasteners

   Replacing screws
   If a screw is loose, remove and replace it.
   Always use the new screws provided in the repair kit.
   If no new screw is available, add blue threadlocker before reusing the screw.
   Do not apply more than the indicated torque.
3. Check the geometry of the part to identify critical deformations.

What to do next

If a problem is detected, perform the authorized maintenance operations or contact your L-Acoustics representative.

Mechanical system overview

Critical parts of the lifting chains are highlighted.

The indicates a visual inspection.

Perform the Rigging part inspection (p.28) on critical parts.

Replacing screws
If a screw is loose, remove and replace it.
Always use the new screws provided in the repair kit.
If no new screw is available, add blue threadlocker before reusing the screw.
Do not apply more than the indicated torque.

A15i Wide/Focus and KS21i array with A15i-BUMP and M-BARi

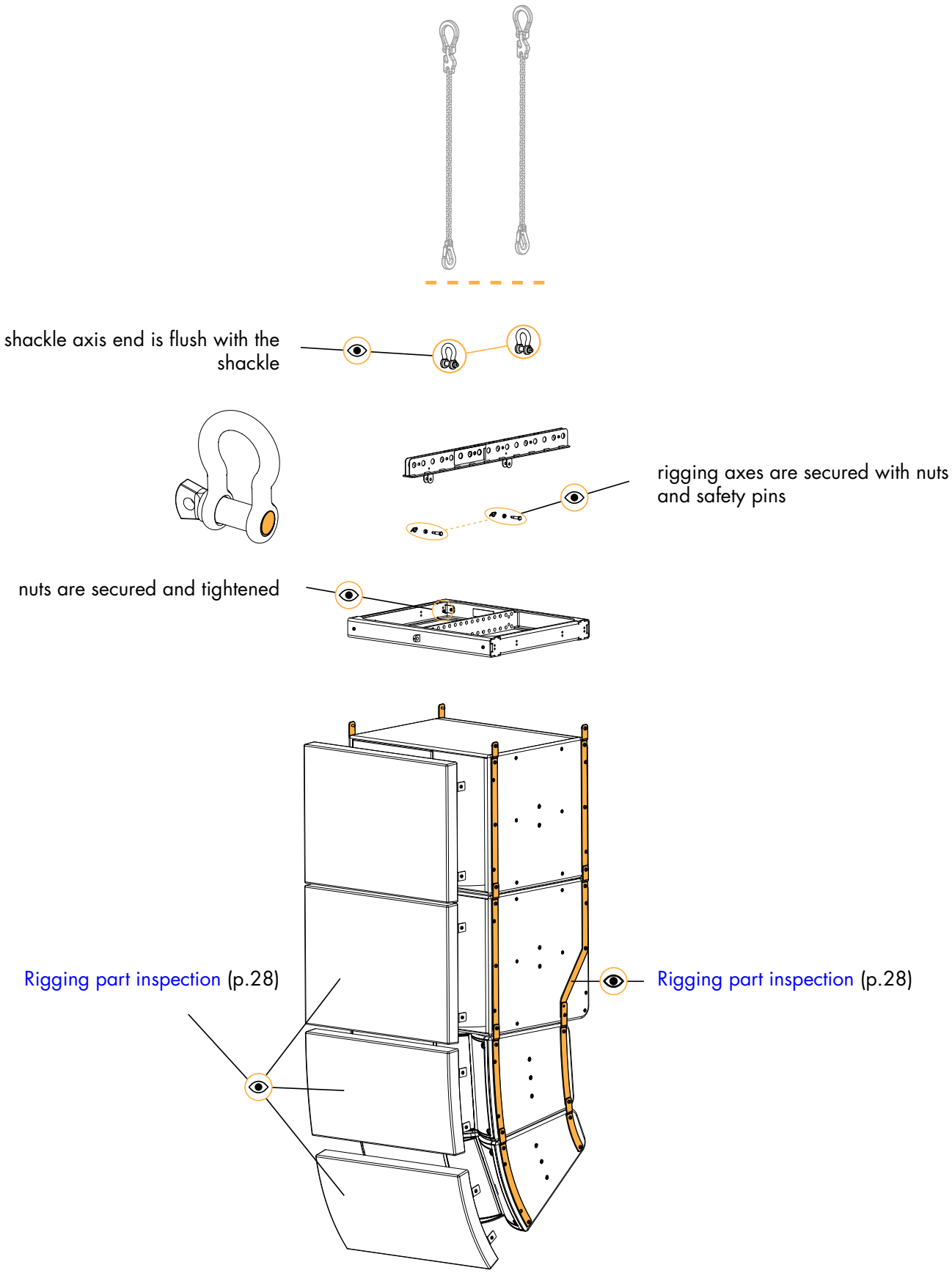

KS21i and A15i Wide/Focus ceiling-mounted with A-U15i

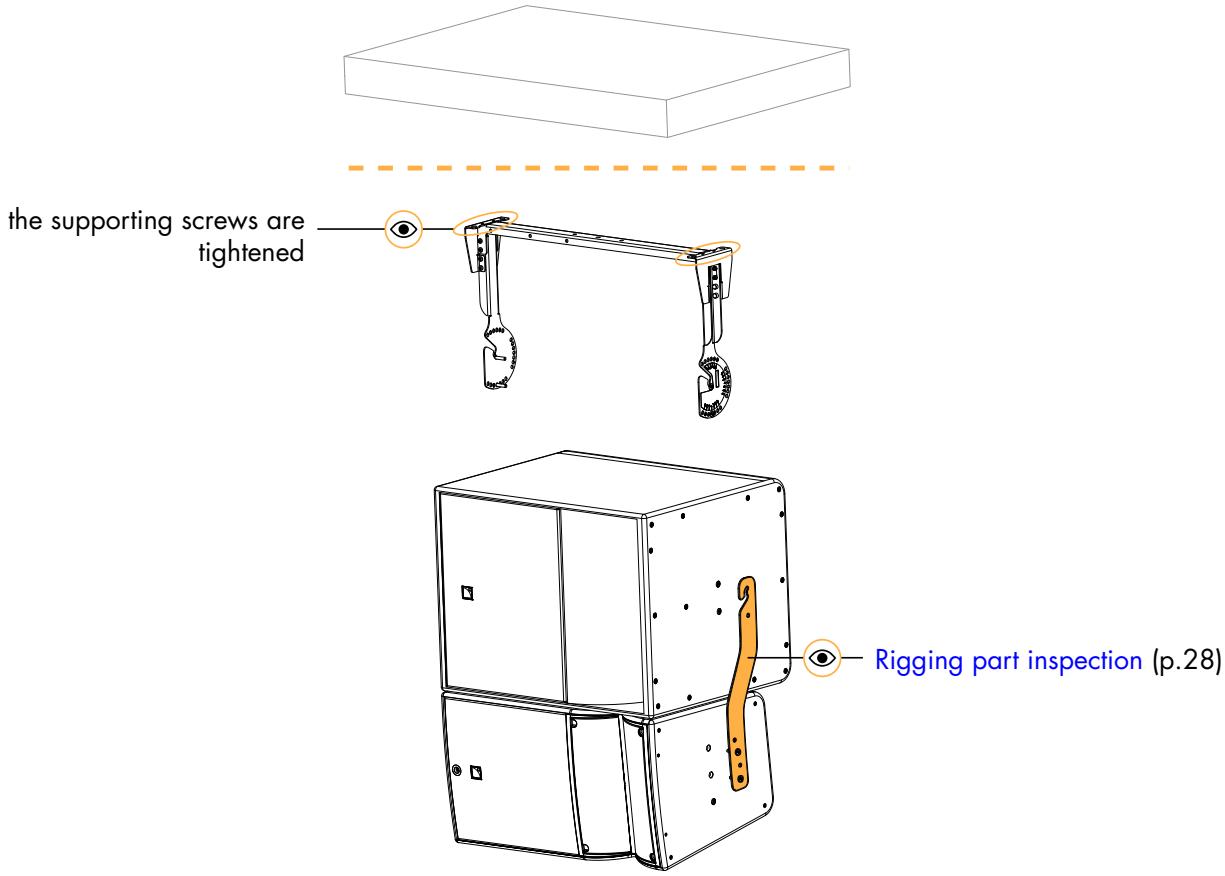

KS21i and A15i Wide/Focus ceiling-mounted with Ai-FIXBRACKET

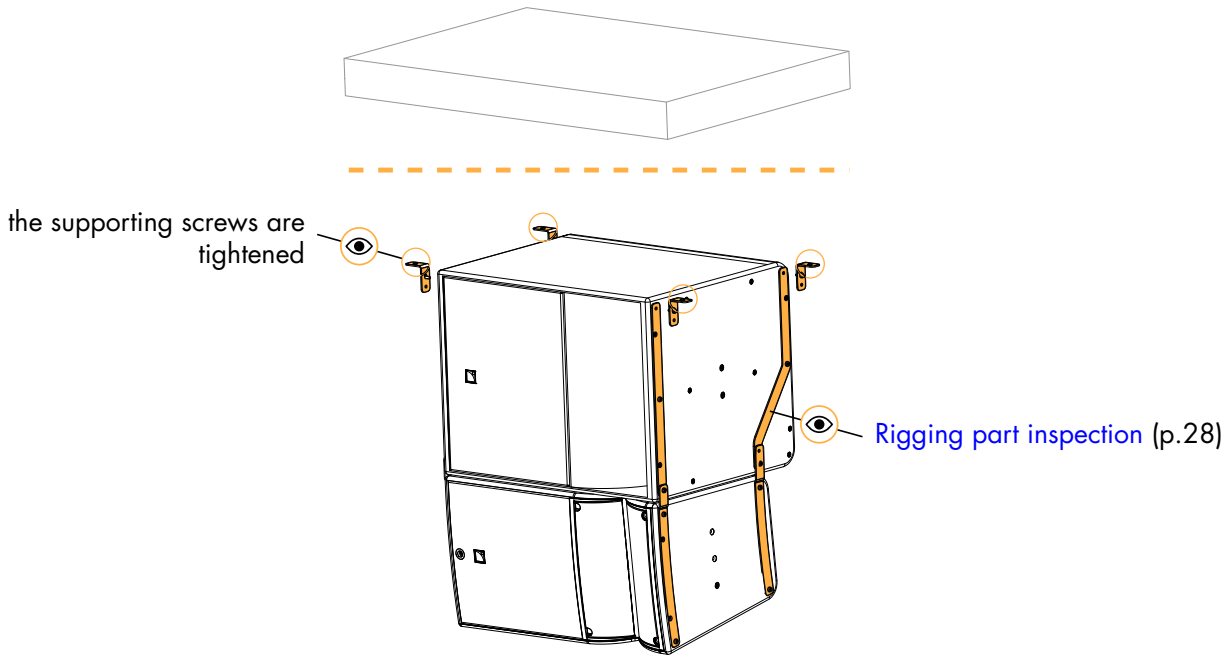

A15i Wide/Focus stacked on KS21i

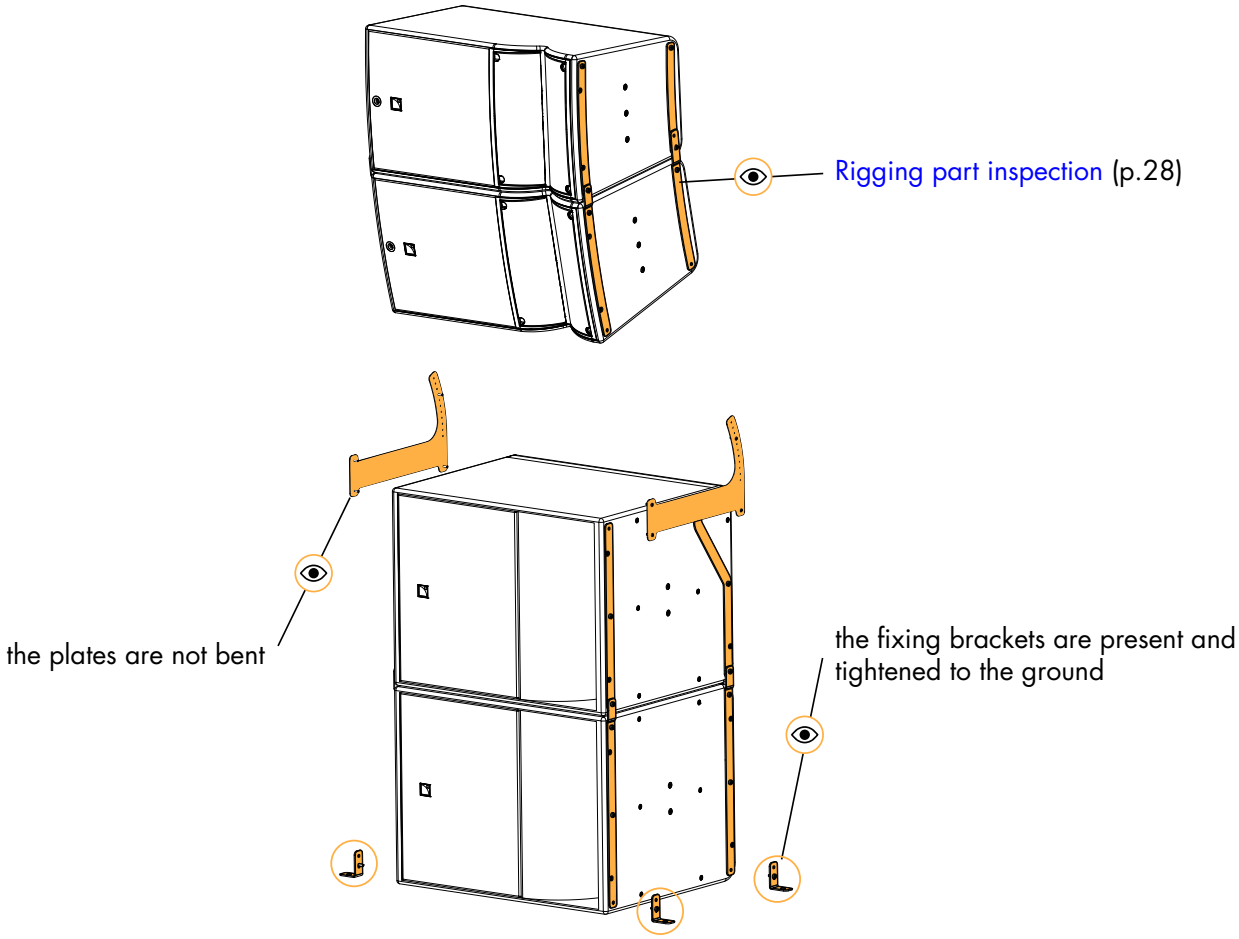

Acoustical check

Enclosure check

This feature is available on:
LA4X
LA12X

ENCLOSURE CHECK measures impedance at the reference frequencies for the connected loudspeaker family. The measured impedance is compared to the expected range allowing for fast detection of loudspeakers presenting circuit continuity issues.

The results can be used for preliminary diagnosis but cannot replace a comprehensive quality control.

Prerequisite

ENCLOSURE CHECK measurements can only be reliable if the following requirements are met:

Environment and temperature:
- Ambient temperature must be comprised between 0 °C / 32 °F and 40 °C / 104 °F. Ideal temperature is 20 °C / 68 °F.
- Enclosures must be at room temperature. If warm from a recent high level use or recently moved from a cold environment, let the loudspeakers reach room temperature before starting.

Enclosures:
- Enclosures must be included in the embedded factory preset library.
- Enclosures must be in nominal operating conditions:
  - Remove covers or dollies obstructing the loudspeakers or the vents.
  - Check for obvious physical damage or air leak: visually inspect the grill, gasket, cabinet, and connector plate for loose, missing or damaged parts.

Connection:
- Use only 10 m / 30 ft 4 mm² / AWG 11 speaker cables.
- Do not connect enclosures in parallel.

Amplified controllers:
- LA4X must run at least firmware version 1.1.0.
- LA4X load sensors must be calibrated. Refer to the **Load Sensor Calibration Tool** technical bulletin for more information.
- LA4X must warm up for at least 10 minutes after power up. Do not power off, reboot or switch to standby mode to avoid resetting the countdown.
- Load a preset corresponding to the connected loudspeaker's family. Presets from the user memories may be used on condition they are made of presets supported in the embedded factory preset library.

Procedure

1. Power up the amplified controller. Let LA4X warm up for at least 10 minutes.
2. Connect the loudspeaker enclosures to the amplified controller.
3. Load a preset from or built from the embedded library corresponding to the connected loudspeaker family.
4. On the amplified controller, use the encoder wheel to select **MONITORING & INFO**. Press the OK key or the encoder wheel to validate.
5. Use the encoder wheel to select **ENCLOSURE CHECK**.

   Beware of sound levels.
   Although the sound pressure levels generated for the ENCLOSURE CHECK are moderate, do not stay within close proximity of the loudspeakers and consider wearing ear protection.
6. Press the OK key or the encoder wheel to launch the ENCLOSURE CHECK.

   The amplified controller generates short sinusoidal signals simultaneously for each connected output.

   The amplified controller displays the results for each output.

7. Depending on the displayed results, follow the instructions in the table.

result	interpretation	instructions
OK	measured impedance is within expected range	enclosure is in working order electrically
?	unsupported preset family	only supported enclosures should be tested
NC	Not Connected	if cables are connected: **a.** inspect the cables and connections **b.** go to step 8 (p.33)
NOK	measured impedance is not within expected range	**a.** check that all the prerequisites are met, in particular that the loaded preset corresponds to the connected speaker's family **b.** inspect the cables and connections **c.** go to step 8 (p.33)
UNDEF	measured impedance is undefined	

8. Under NC, NOK and UNDEF results, press and hold the corresponding OUT key.

The amplified controller displays:

- the tested frequencies,
- information on the measured impedance:
  - OPEN for open circuit (found in NC results),
  - SHORT for short circuit (found in NOK results), or
  - a percentage of variation from the expected range (found in NOK and UNDEF results)
- the number of operational transducers out of the total

Low variations from the expected range are acceptable: displayed percentage can be different from 0 and all transducers considered operational.

Listening test

enclosure	preset	usable bandwidth
KS21i	[KS21_100]	31 Hz - 100 Hz

Procedure

1. Load the preset on an LA2Xi / LA4X / LA8 / LA12X amplified controller.
2. Connect a sinus generator to the amplified controller.

   Risk of hearing damage
   Set a low sound level to start and use ear protection to adjust before testing.
3. Scan the bandwidth focusing on the usable range.
   The sound should remain pure and free of unwanted noise.

Troubleshooting for LF speakers

One or more LF speaker produces distorted, buzzing, rubbing, clicking, muffled or weak sound.

Possible causes

- The screws are not tightened with the appropriate torque.
- There is an air leak in the gasket.
- There is dust on the cone.
- The cone is damaged.
- The surround is torn or delaminated.
- The voice coil or the spider is damaged.

Procedure

1. Perform the speaker disassembly procedure.
2. Visually inspect the cables and the connectors.
3. Visually inspect the speaker cone, the voice coil and the spider.

   If any damage is visible, replace the speaker.
4. Carefully clean the speaker with a dry cloth.
5. Perform the reassembly procedure.
   Replace the speaker gasket and the screws.
   Apply the recommended torque.
6. Repeat the listening test.

   If the problem persists, replace the speaker.

Troubleshooting for HF drivers

One or more HF driver produces high-frequency harmonic distortions, strange vibrations or weak sound.

Possible causes

- There are foreign particles on the air gap.
- The diaphragm is not centered correctly.
- The screws used for reassembly are too loose.
- The diaphragm is damaged.
- The number of shims is wrong.

Procedure

1. Perform the diaphragm disassembly procedure.
2. Visually inspect the diaphragm and the voice coil.

   If any damage is visible, replace the diaphragm.
3. Clean the air gap thoroughly.

   Use double-face adhesive tape to remove any particles.
4. Perform the diaphragm reassembly procedure.

   Pay close attention to the number of shims and the position of the diaphragm.

   Apply the recommended torque.
5. Repeat the listening test.

   If a buzzing sound is still audible, it might be necessary to add an extra shim on the air gap.

   If the problem persists, replace the driver.

Rigging procedures

General principles

Because of the highly-modular nature of the rigging system, not all possible configurations are described in the rigging procedures. This introduction provides general principles applicable for all configurations.

References

For information on wall-mounted or ceiling-mounted configurations with A-U15i, refer to APPENDIX A: Configurations with A-U15i (p.74).

Securing rigging plates on an enclosure

- Make sure that the inserts for the screens are accessible.

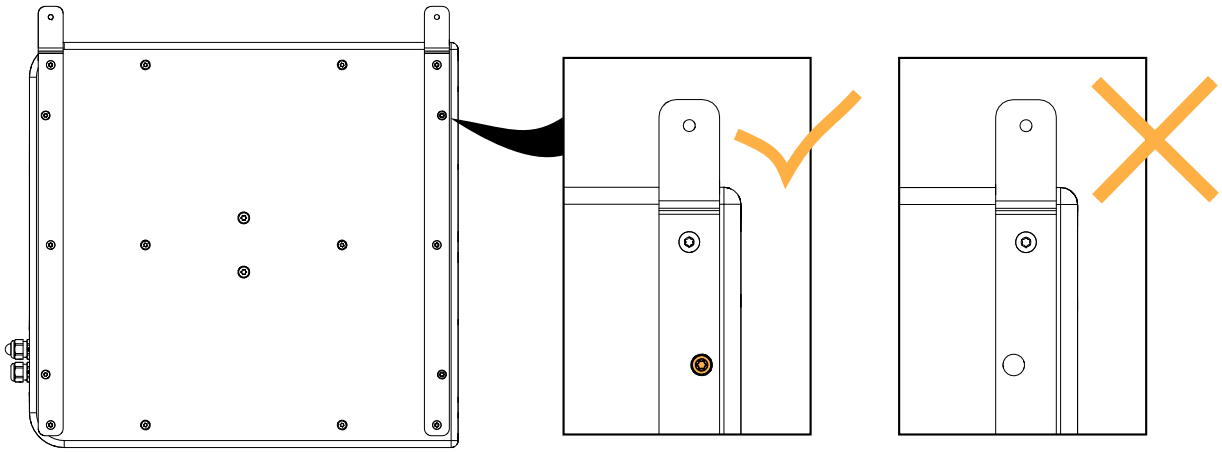

Driving screws

Do not fully tighten the screws unless otherwise instructed.

Follow the indicated torque when tightening a screw.

Securing rigging plates between two enclosures

- Always secure standard rigging plates with the linking section upwards.

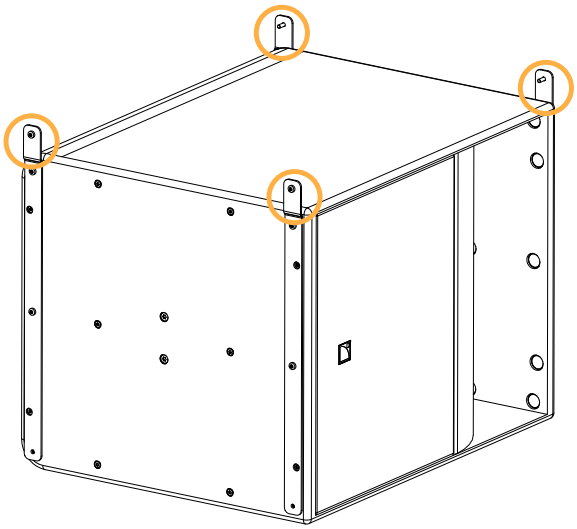

- After securing an enclosure to another enclosure, tighten all the screws on the supporting enclosure.

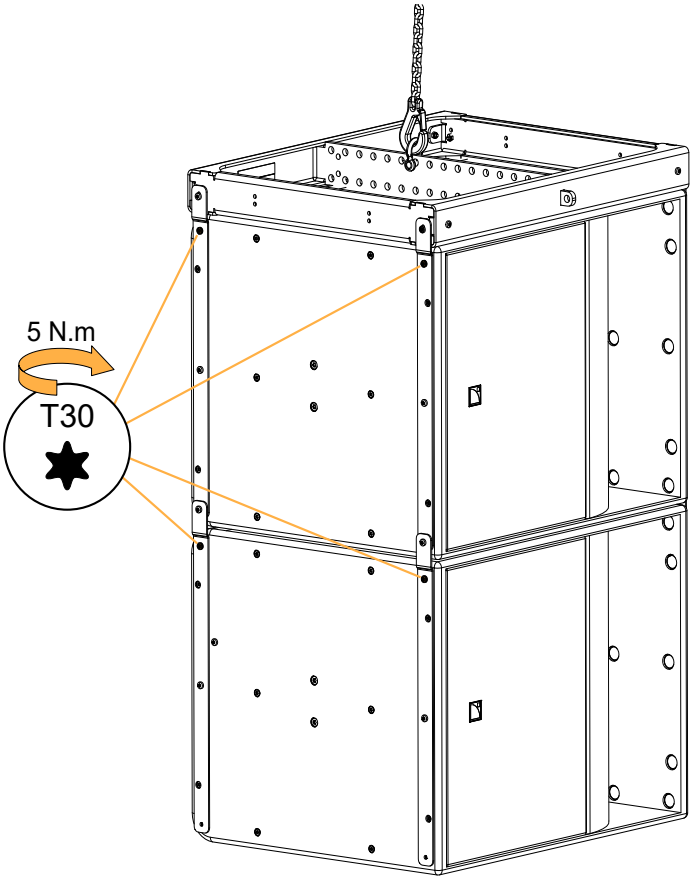

Screws

- Always remove the relevant placeholder screws before securing the rigging plates.

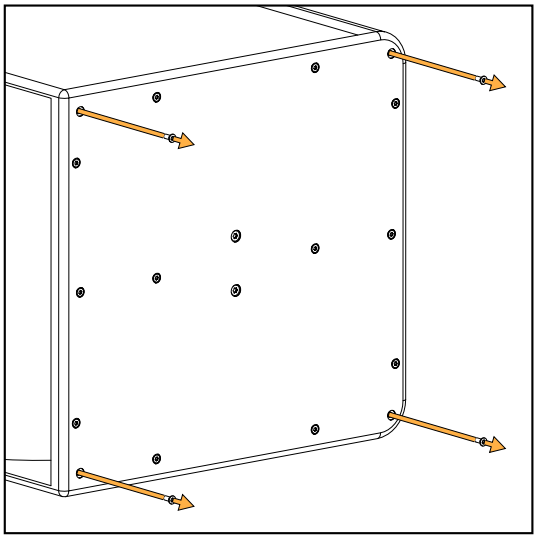

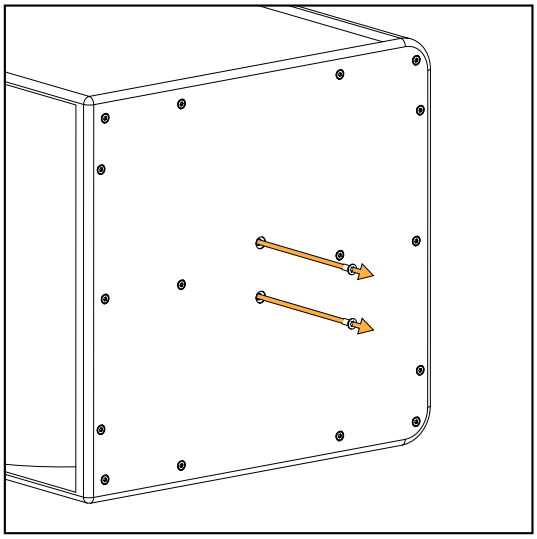

- Do not use placeholder screws for rigging purposes.

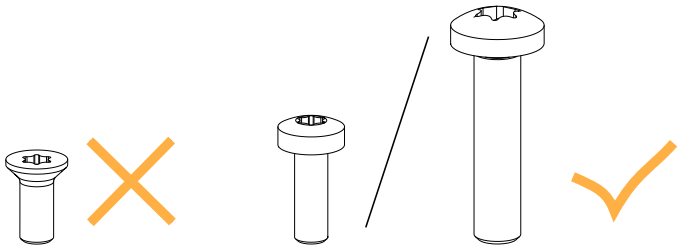

Stacked configurations

Fastening brackets
Always secure a stacked array to the ground using Ai-FIXBRACKET to ensure stability of the array.

Tools

Before performing rigging procedures on this product, make sure all the tools listed are available. References are given for FACOM® products in this table. Other manufacturers can be used.

Name	Reference	Distributor
Set of 6-point 1/4" sockets	RL.NANO1 / R.360NANO	FACOM
electric screwdriver with torque selector	-	-
Torque screwdriver (2 - 10 N.m)	A.404	FACOM
10 mm wrench	-	-

Flying

Flying a vertical array with A15i-BUMP

Type of deployment	flown array
Rigging accessories	A15i-BUMP
	KS21i rigging plates
	2 x Ø12 mm shackle WLL 1 t (provided)
Additional accessories	M6x18 rigging screws (provided)
	M6 nuts (provided)
	T30 Torx bit
Min number of operators	3

Rigging plates

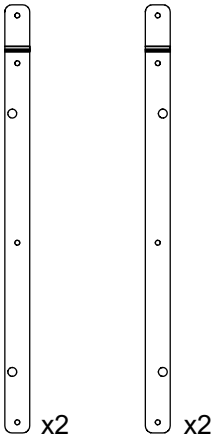

KS21i-LINK

Rigging plates
for KS21i

Risk of falling objects
Verify that no unattached items remain on the product or assembly.

Secondary safety
Use available holes on the rigging accessories to implement a secondary safety.

KS21i array

Procedure

1. Prepare the enclosures by removing the placeholder screws and securing rigging plates on both sides.

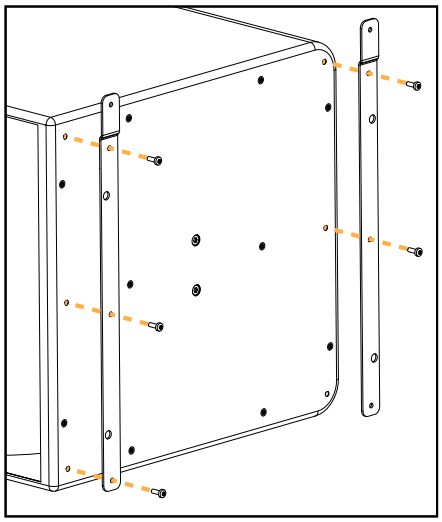

KS21i

2. Secure A15i-BUMP on top of KS21i.

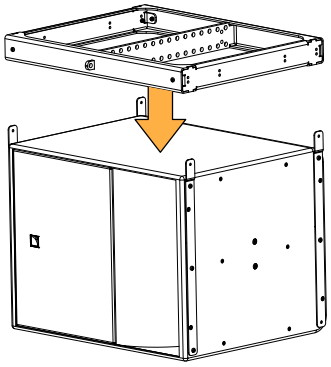

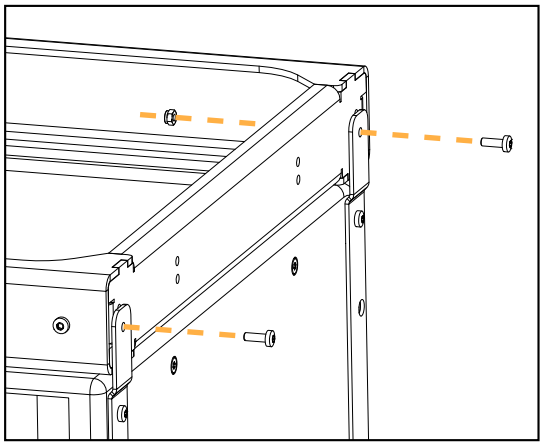

3. Select the pick-up point and raise the array.

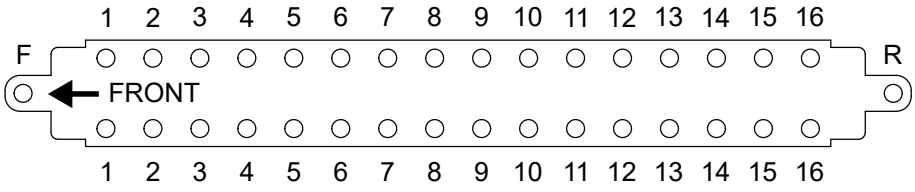

4. Secure an additional KS21i under the array:

a) **This step requires three operators.**
Hold the enclosure at the bottom until the rigging plates are secured.

Lift the rear of the new KS21i and secure it to the array by pre-tightening a rigging screw on both sides.

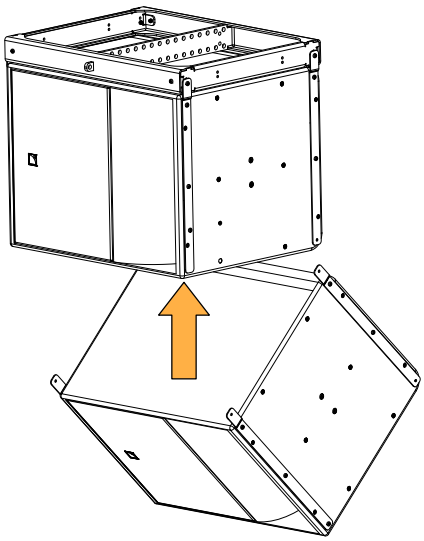

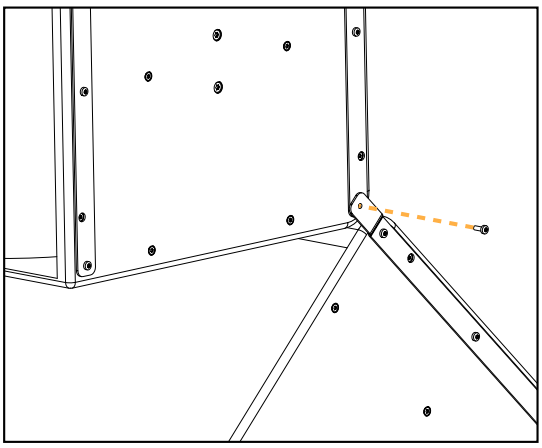

b) Remove the rigging screws at the bottom front on both sides of the supporting KS21i.

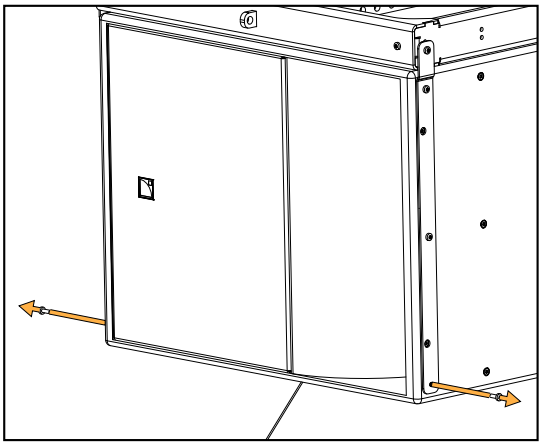

c) Link the KS21i enclosures at the front with rigging screws.

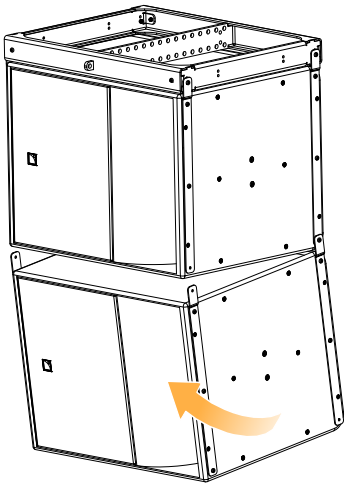

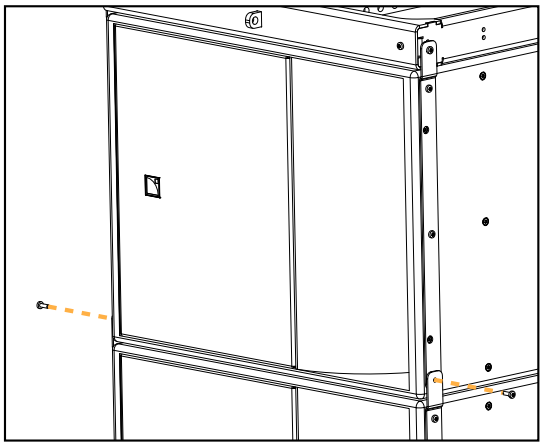

d) Tighten all the screws on the supporting KS21i.

Apply a torque of 5 N.m.

e) Repeat the procedure until the KS21i array is completed.

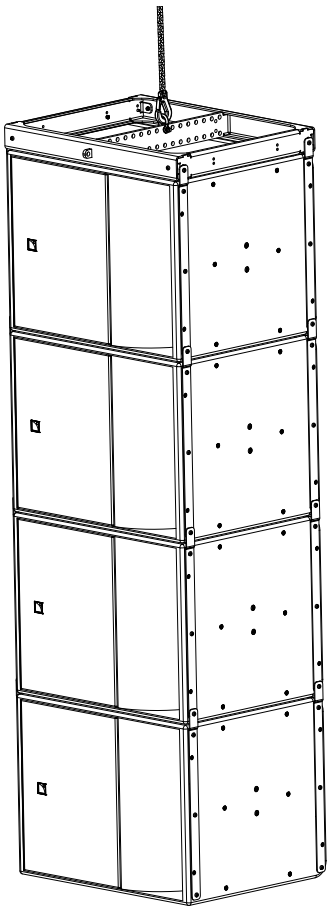

5. Check that all the screws are secured and tightened (5 N.m torque) and raise the array.

What to do next

Securing a screen (p.55)

Wall-mounting or ceiling-mounting

Mounting an assembly with A-U15i

Type of deployment	ceiling-mounting, wall-mounting
Rigging accessories	A-U15i
	U-bracket rigging plates
Additional accessories	M8x35 rigging screws (provided)
	4 x M10 screws and anchors
	T40 Torx bits
Min number of operators	3

Rigging plates

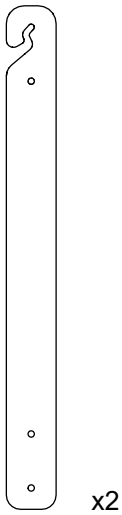

KS21i-ULINK

Rigging plates for flying two KS21i with A-U15i

Additional safety for flown arrays
When flying an array, use available holes to implement a secondary safety.

The procedure is shown with A-U15i in horizontal position.
The same procedure applies for all configurations with A-U15i. Refer to APPENDIX A: Configurations with A-U15i (p.74).

Resistance value of anchoring points

Configuration		Tensile load	Shear load
Wall-mounted	A-U15i in horizontal position, with 1 enclosure	275 daN	65 daN
	A-U15i in horizontal position, with 2 enclosures	375 daN	75 daN
	A-U15i in vertical position, with 1 enclosure	40 daN	30 daN
Ceiling-mounted		150 daN	—

Assembly

Procedure

Fasteners for wall-mounting or ceiling-mounting
Select screw length and anchors applicable to the wall or ceiling properties.

1. Mount A-U15i on the ceiling or on the wall using four M10 screws.

When using a U-bracket horizontally, make sure the hooks are oriented upwards.

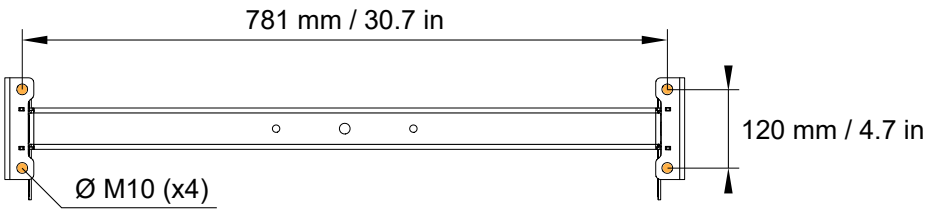

2. Prepare a KS21i by removing the placeholder screws at the center of each side of the enclosure.

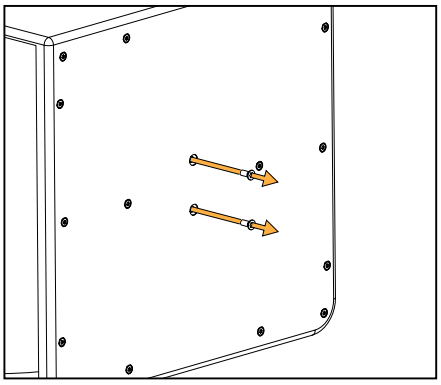

3. Using the screws provided with A-U15i, drive a screw on both sides.
   Approximately 10 mm (0.4 in) of the thread must be visible.

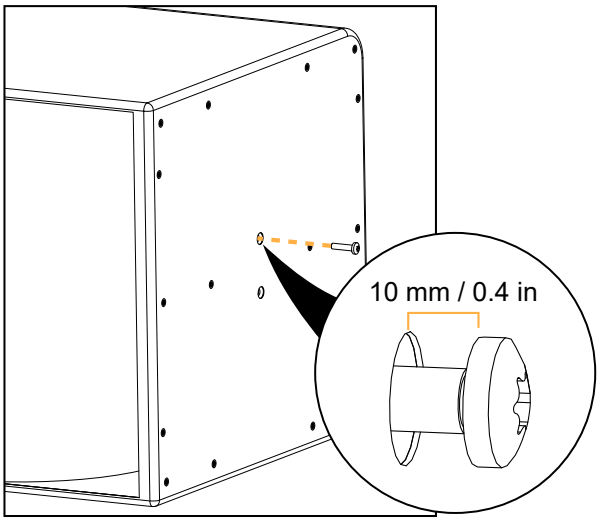

Alternatively, drive the screw in the bottom insert for a configuration with the enclosure closer to the ceiling.

4. Mount the enclosure on A-U15i.

This step requires two operators.
Hold the enclosure at the bottom on each side.

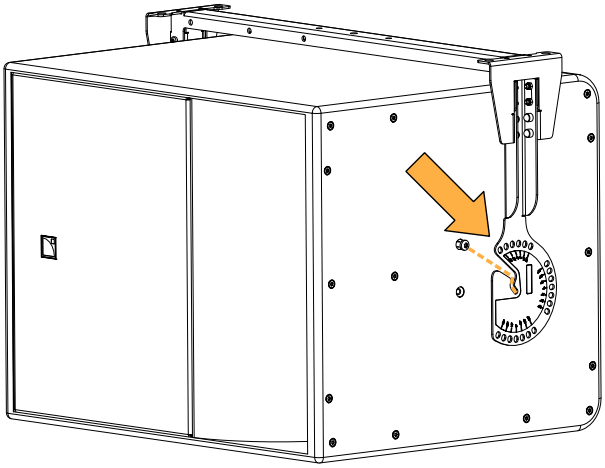

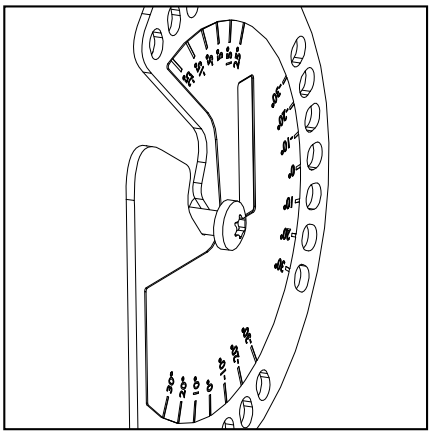

5. Set the angle:

For a single enclosure:

a. Rotate the enclosure to align the second insert with the selected site angle.

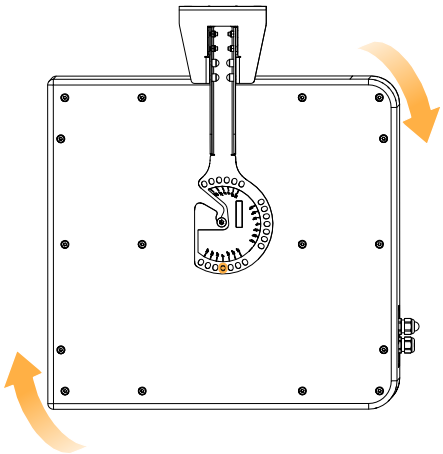

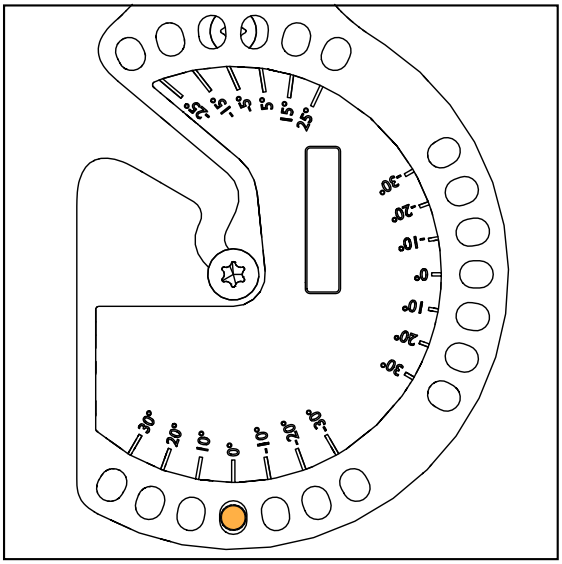

b. Drive a screw on both sides.

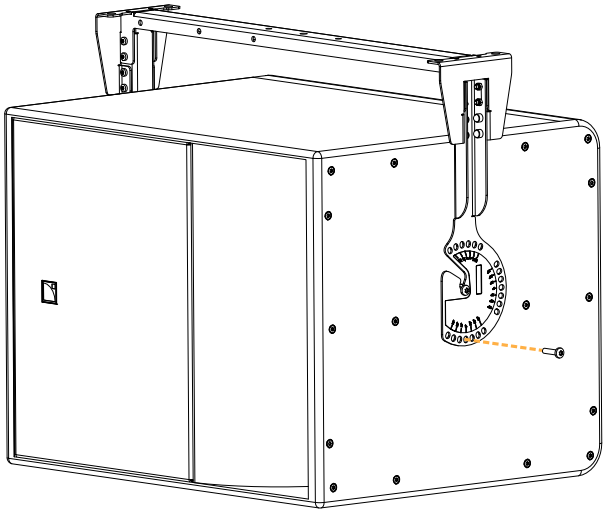

c. Tighten all the screws (5 N.m torque).

For a two-enclosure assembly:

This configuration limits the site angle. Refer to APPENDIX A: Configurations with A-U15i (p.74) for a list of possible site angles for each enclosure.

a. Slide the KS21i-ULINK rigging plates between A-U15i and the enclosure, with the hooks facing front.

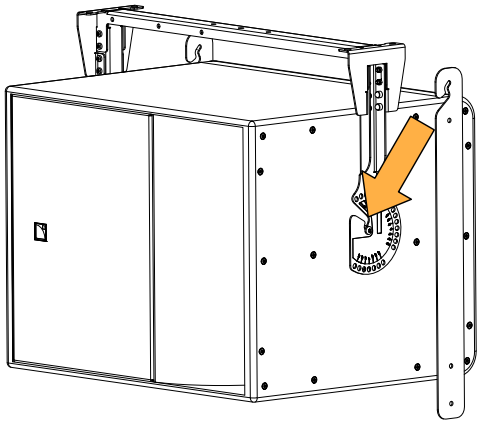

b. Rotate the enclosure and the rigging plates to align the second insert and the rigging plates with the selected site angle.

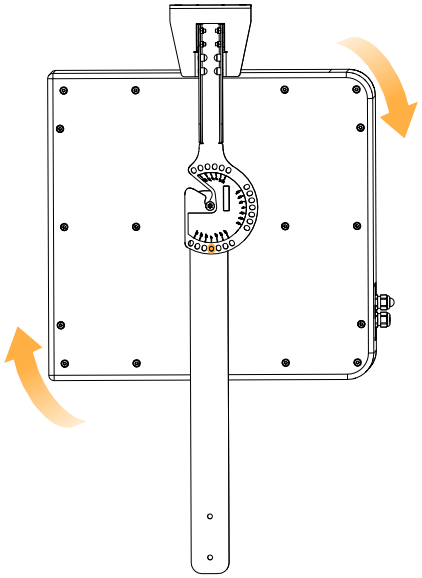

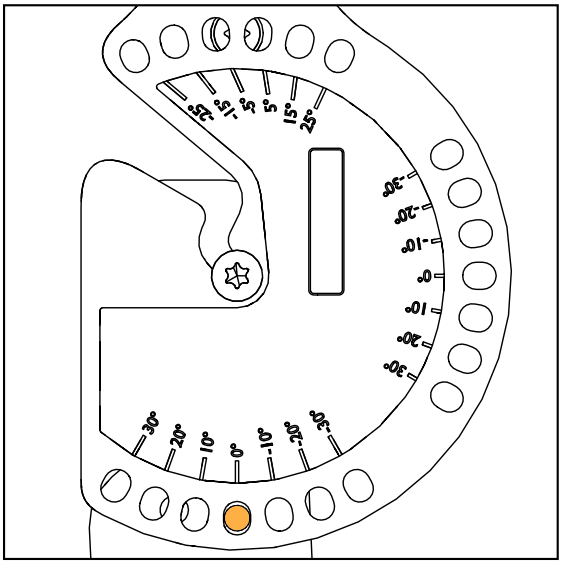

c. Drive a screw on both sides.

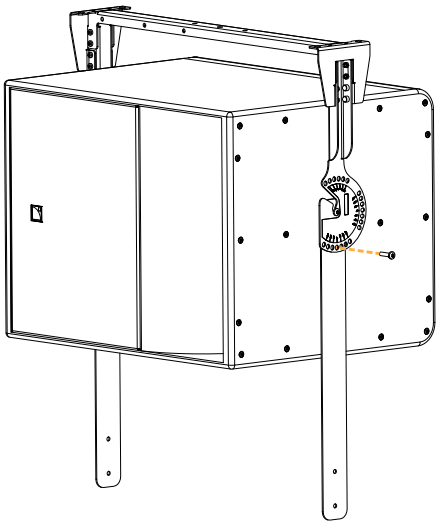

d. Tighten all the screws (5 N.m torque).

6. Prepare a new KS21i by removing the two placeholder screws at the center of each side of the enclosure.

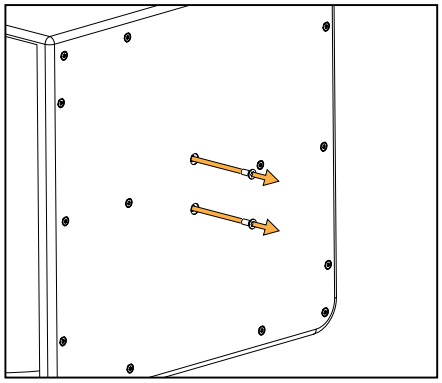

7. Secure the enclosure to the U-bracket rigging plates.

Apply a torque of 5 N.m.

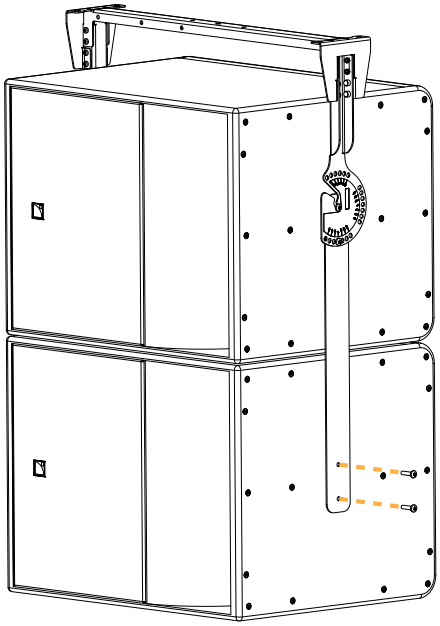

If the two enclosures are misaligned at the front, loosen the screws on the U-rigging plates and realign the two enclosures, then re-tighten the screws.

What to do next

Securing a screen (p.55)

Mounting an assembly on a ceiling with Ai-FIXBRACKET

Type of deployment	ceiling-mounting
Rigging accessories	Ai-FIXBRACKET
	KS21i rigging plates
Additional accessories	M6x18 rigging screws (provided)
	4 x M10 screws and anchors
	T30 Torx bits
Min number of operators	3

Rigging plates

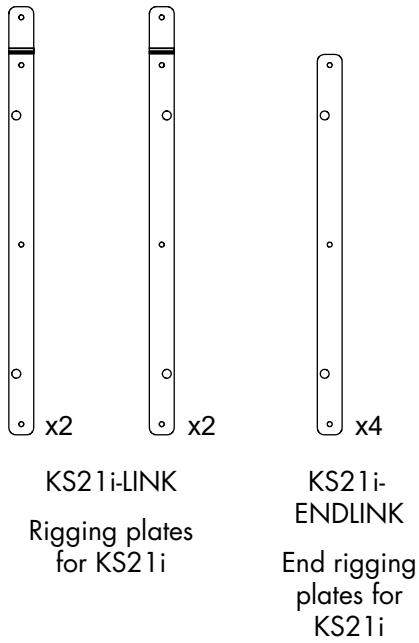

Ai-FIXBRACKET in ceiling-mounted configuration
In a ceiling-mounted configuration, the array applies a force of **60 daN** on the anchoring points.

Assembly

Procedure

1. Secure Ai-FIXBRACKET to the ceiling using M10 screws.

   Fasteners for wall-mounting or ceiling-mounting
   Select screw length and anchors applicable to the wall or ceiling properties.

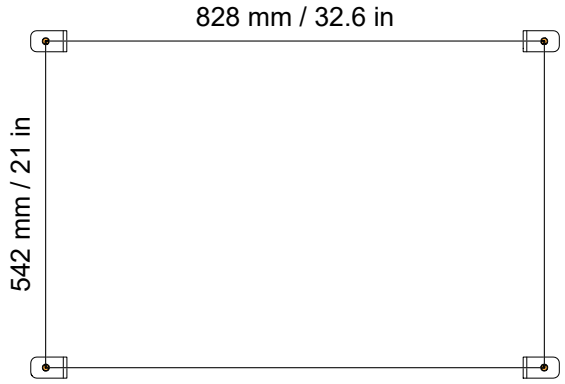

2. Prepare an enclosure by removing the placeholder screws and securing end rigging plates on both sides.

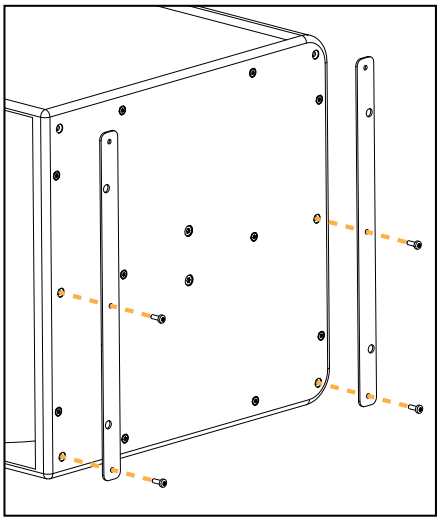

3. Secure the rear of the enclosure to Ai-FIXBRACKET.

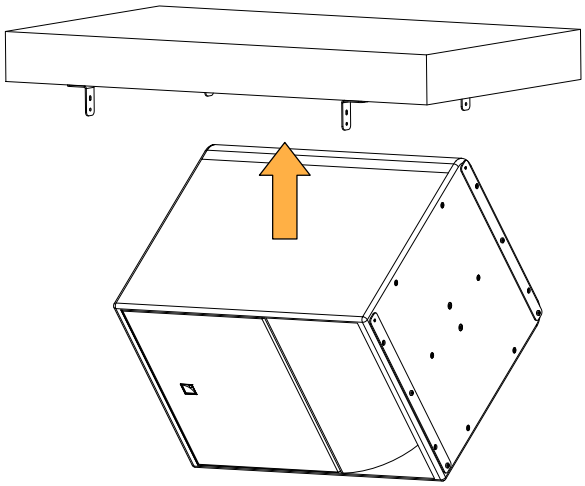

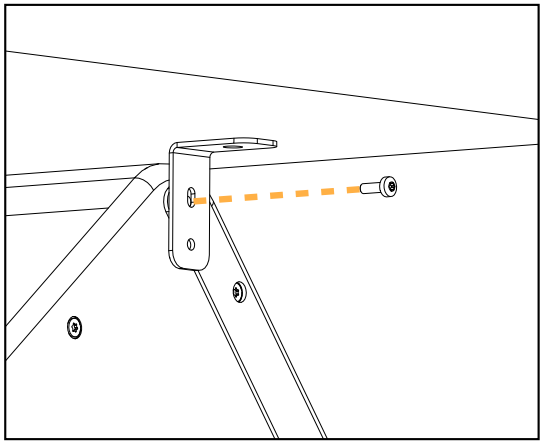

4. Lift the front of the enclosure and secure it to Ai-FIXBRACKET.

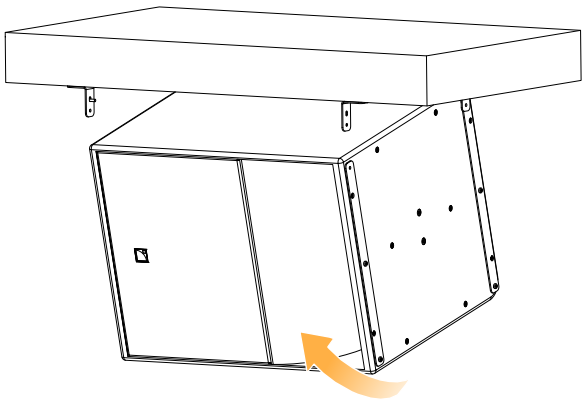

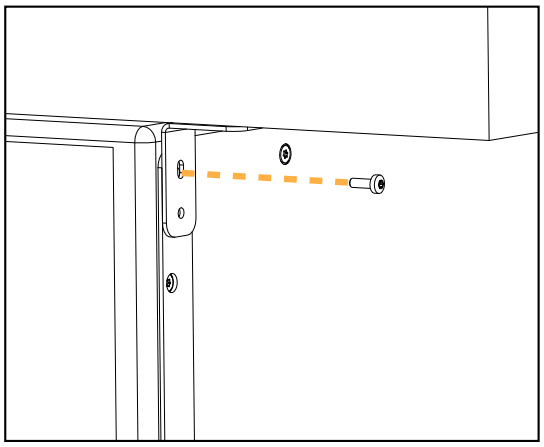

5. Tighten the screws on Ai-FIXBRACKET (5 N.m torque).

6. Prepare a new enclosure by removing the placeholder screws and securing rigging plates.

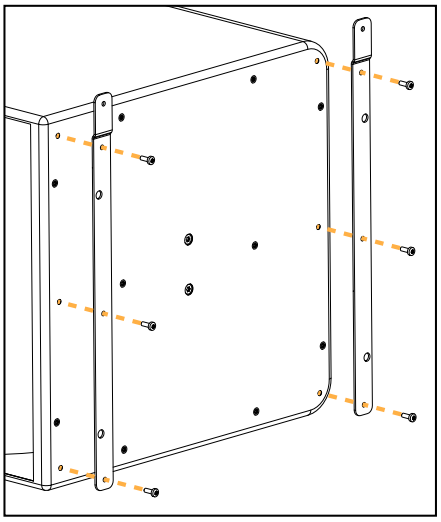

7. Remove the bottom screws of the supporting enclosure.

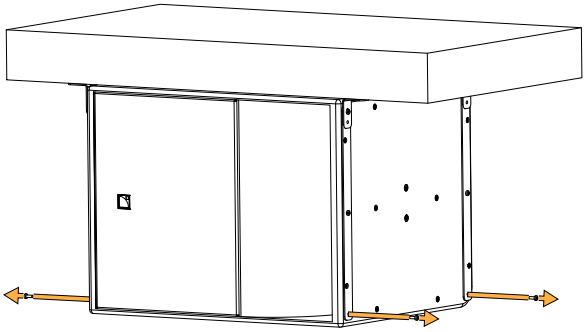

8. Link the two enclosures at the rear by pre-tightening a rigging screw on both sides.

This step requires three operators.
Hold the enclosure at the bottom until the rigging plates are secured.

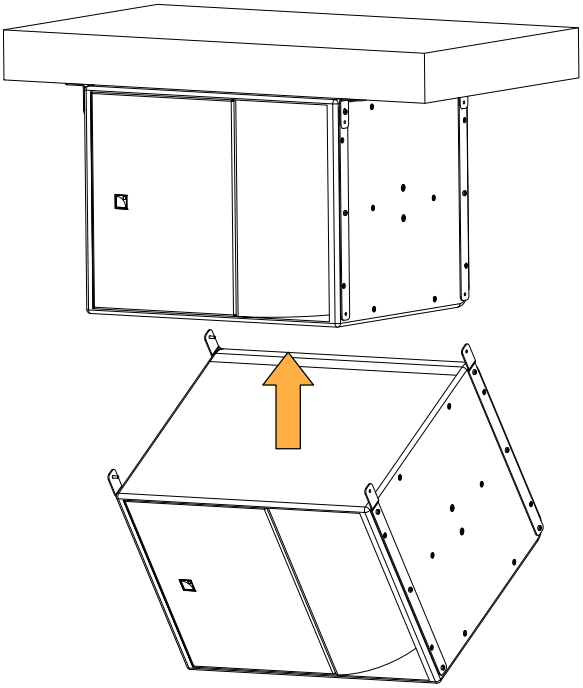

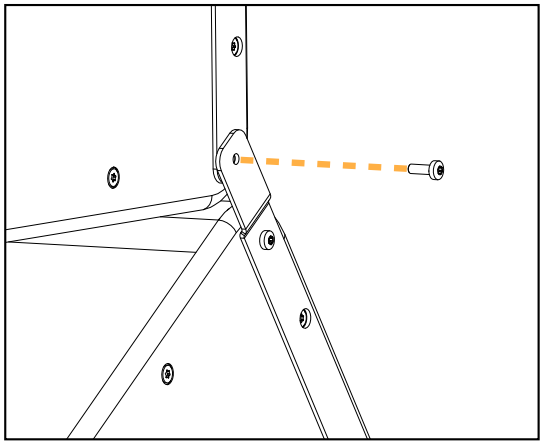

9. Link the two enclosures at the front by pre-tightening a rigging screw on both sides.

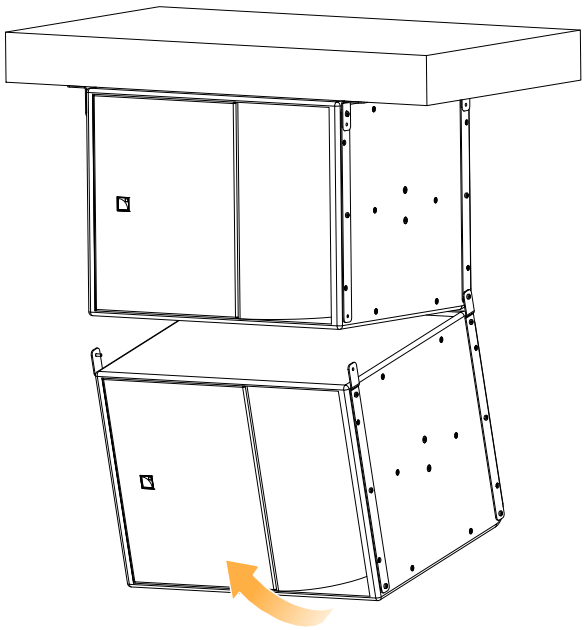

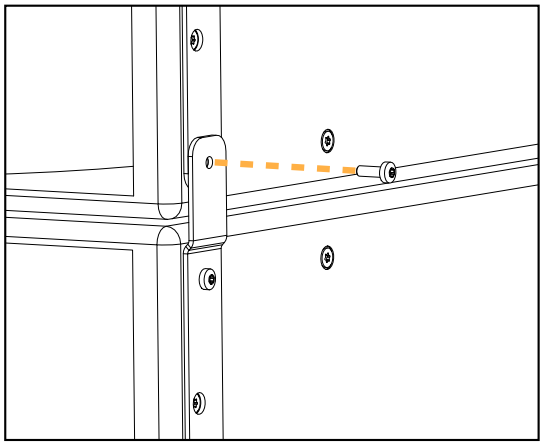

10. Check that all the screws are secured and tightened (5 N.m torque).

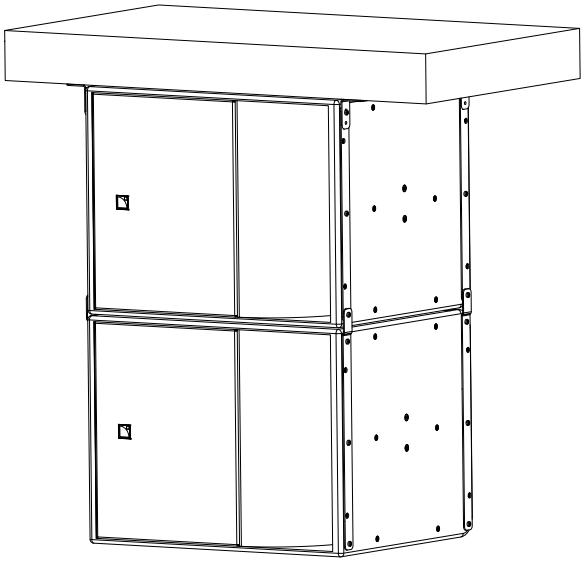

What to do next

Securing a screen (p.55)

Stacking

Stacking KS21i

Type of deployment	stacked array
Rigging accessories	Ai-FIXBRACKET
	KS21i rigging plates
Additional accessories	M6x18 rigging screws (provided)
	4 x M10 screws and anchors
	T30 Torx bits
Min number of operators	2

Rigging plates

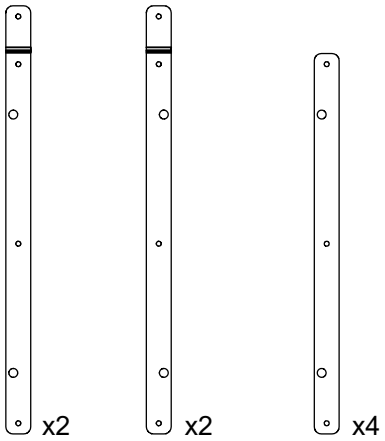

KS21i-LINK

Rigging plates for KS21i

KS21i-ENDLINK

End rigging plates for KS21i

Risk of falling objects
Verify that no unattached items remain on the product or assembly.

Fastening brackets
Always secure a stacked array to the ground using Ai-FIXBRACKET to ensure stability of the array.

Ai-FIXBRACKET in stacked configuration
In a stacked configuration, the array applies a force of **110 daN** on the anchoring points.

Assembly

Procedure

1. Prepare a KS21i by removing the placeholder screws and securing rigging plates on both sides.

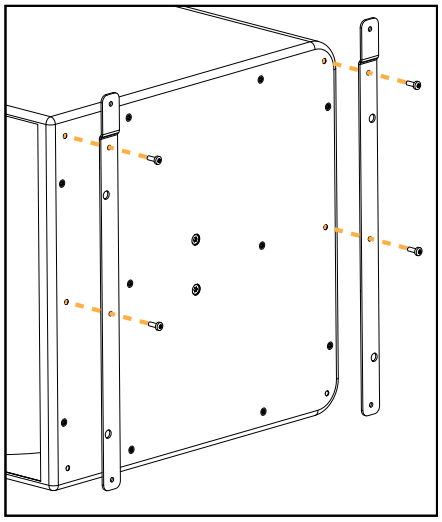

2. Secure Ai-FIXBRACKET to the ground using M10 screws.

Fasteners for wall-mounting or ceiling-mounting
Select screw length and anchors applicable to the wall or ceiling properties.

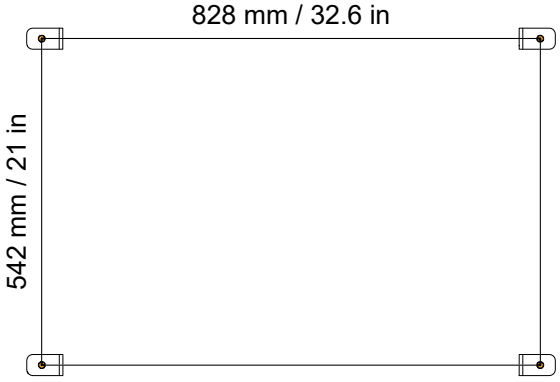

3. Secure KS21i to Ai-FIXBRACKET.

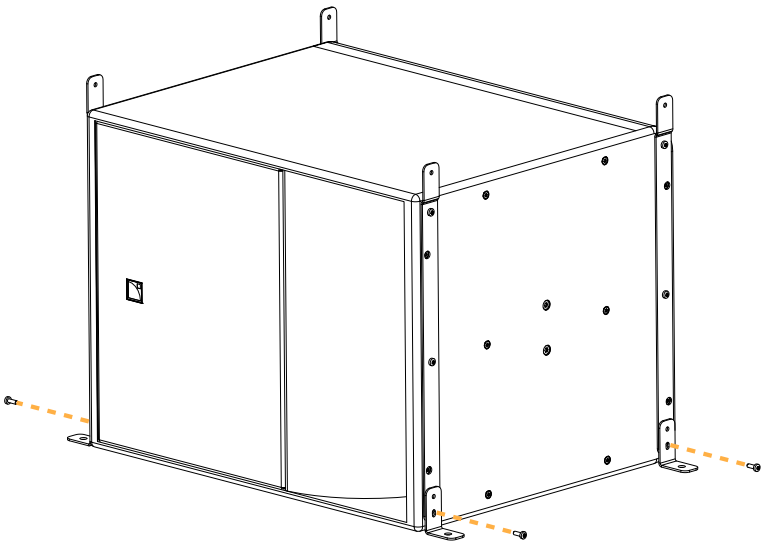

4. Secure up to three additional KS21i on top of the first one.

For the last KS21i, use KS21i-ENDLINK.

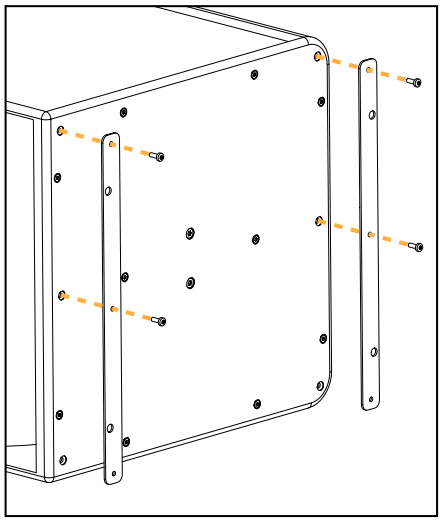

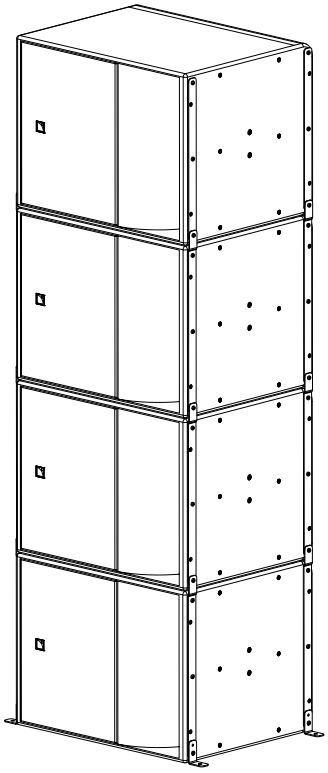

Tighten all the screws on the previous enclosure after securing each new enclosure.

What to do next

Securing a screen (p.55)

Securing a screen

Accessory	KS21i-SCREEN
Additional accessories	2 x M6x20 screws (provided)
	2 x M6x55 screws (provided)
	4 x self-sticking washers (for configurations with a U-bracket, provided)
	T30 Torx bit
Min number of operators	1

Assembly

Prerequisite

Secure the screens on the enclosures after the array is fully assembled.

About this task

Procedure

1. Remove the placeholder screws on the fins side and the grill screws from the inserts.

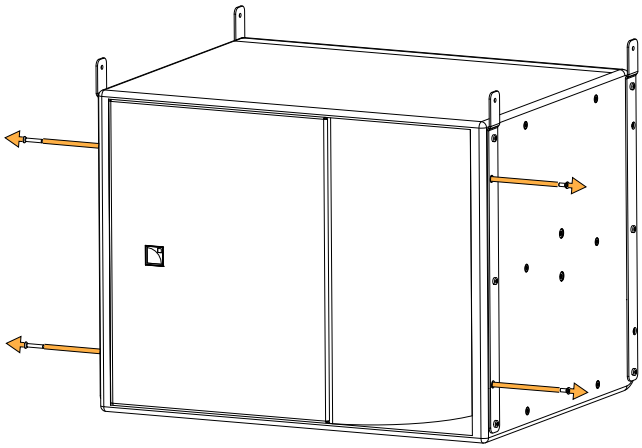

2. Secure the screen using the provided rigging screws.
   Apply a torque of 5 N.m.

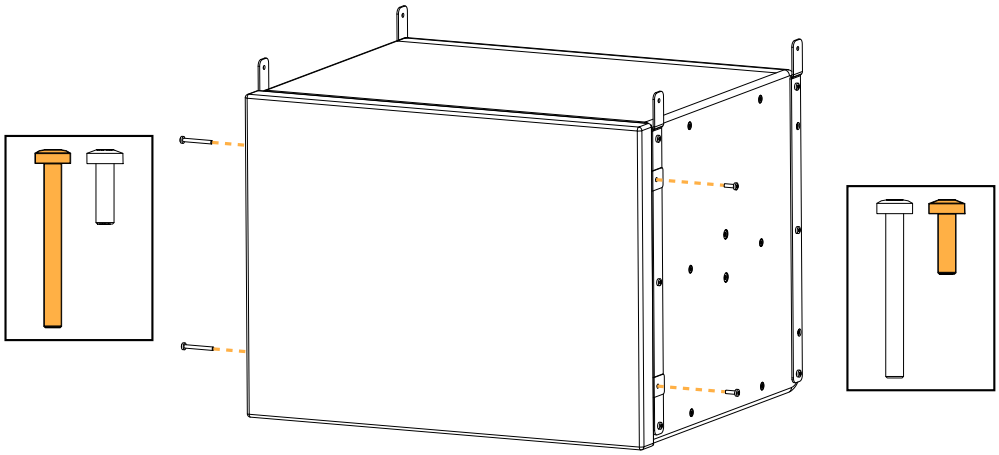

For configurations with A-U15i, stick the provided washers to the screen before securing it on the enclosure.

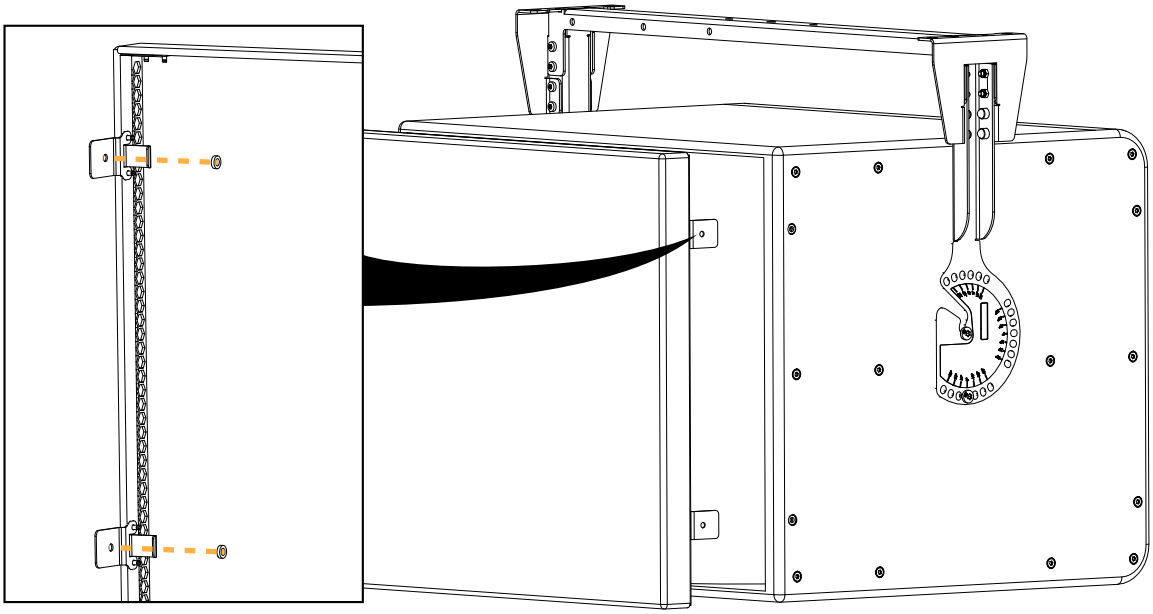

Risk of bending screen fixing tabs

Always use the self-sticking washers for securing screens when there are no rigging plates on the enclosure.

If KS21i is reversed (cardioid configuration), connect the cables to the enclosure before securing KS21i-SCREEN.

Pass the cables through the cutout on the screen side.

See Connection to LA amplified controllers (p.57) for cabling instructions.

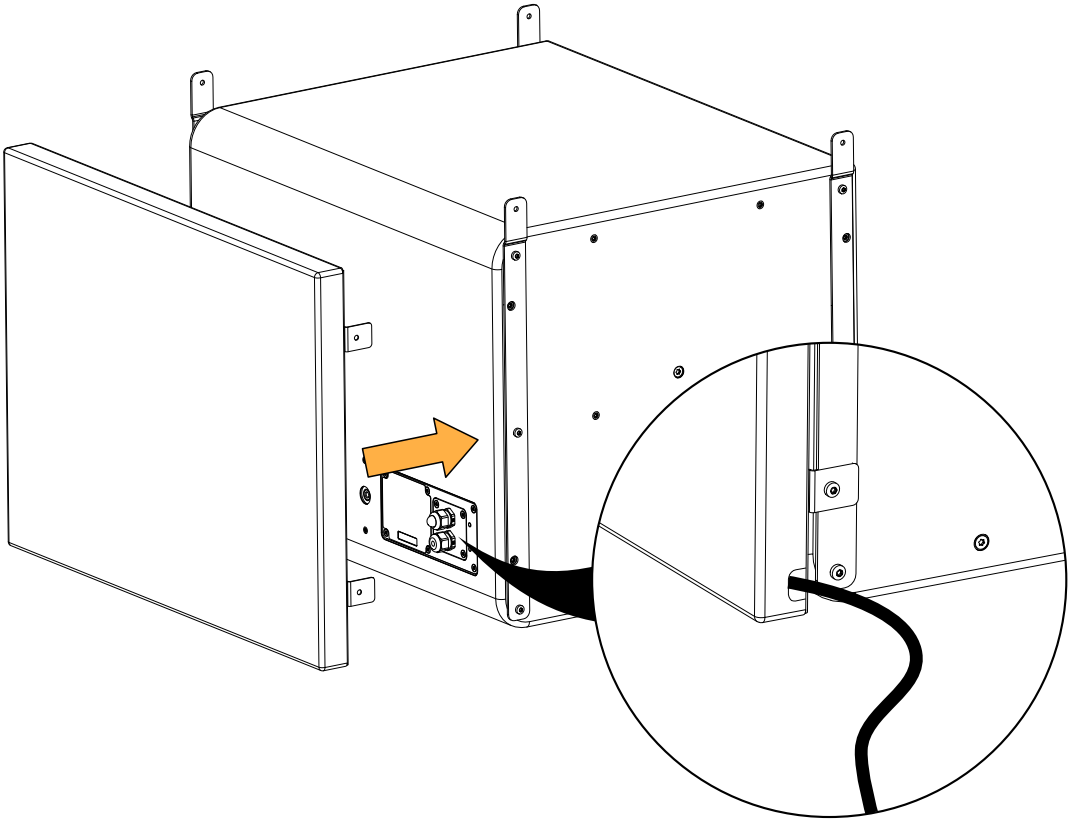

Connection to LA amplified controllers

Enclosure drive capacity per amplified controller

Make sure the total number of connected enclosures does not exceed the maximum number of enclosures per controller (refer to the footnotes).

	LA2Xi	LA4X	LA8	LA12X
	per output */ total	per output */ total	per output */ total	per output */ total
KS21i	1 / 4 (SE), 1 / 2 (BTL)	1 / 4	2 / 6**	2 / 8

Cabling schemes

For KS21i (LA2Xi)

Refer to the cabling schemes to connect the enclosures to different types of output configurations.

Refer to the **LA2Xi owner's manual** for more information on output configurations.

Terminal block output (SE)

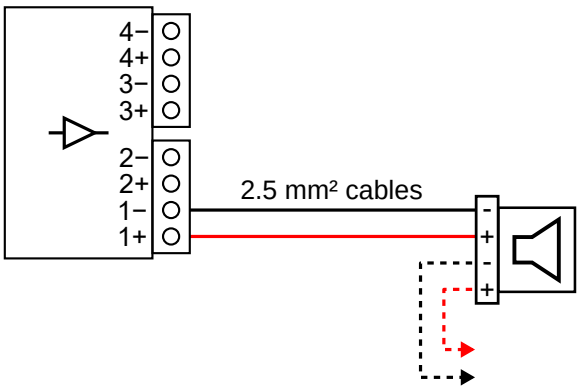

Terminal block output (BTL)

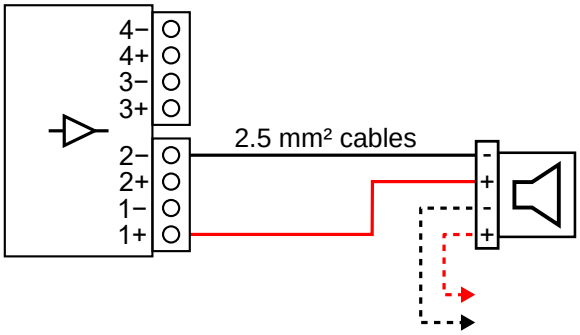

* For passive loudspeakers, the value corresponds to the number of enclosures in parallel on the output. For active loudspeakers, the value corresponds to the number of sections in parallel on the output.

** LA8 can drive up to two KS21 or KS21i per output, but no more than six per controller at high level.

For KS21i (LA4X / LA8 / LA12X)

Refer to the cabling schemes to connect the enclosures to different types of output configurations.

One-channel speakON output

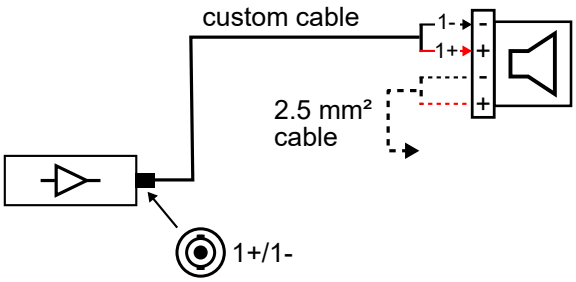

Two-channel speakON output

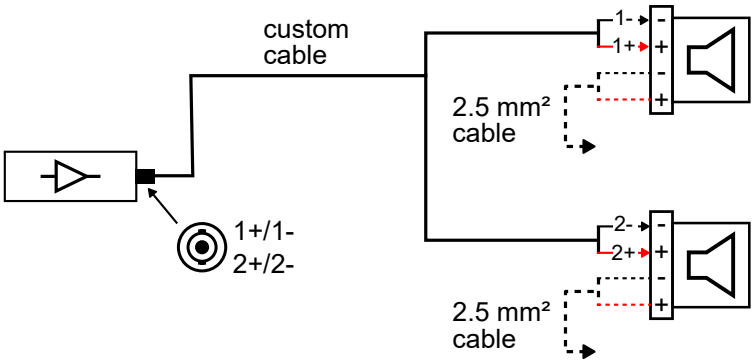

Cabling

Accessory	connector sealing plate (provided)
Screws and fasteners	4 x M5x16 screws (provided)
Tools	torque screwdriver
	T25 Torx bit
	small tool or flat screwdriver (3 mm or less)
Min number of operators	1

Assembly

Prerequisite

Refer to:

- APPENDIX B: Recommendation for speaker cables (p.76)
- Cabling schemes (p.57)

About this task

The connector sealing plates have two cable glands: one for the input cable and one for the cable connecting to the next enclosure in parallel. The second cable gland is equipped with a protective plug.

This procedure describes how to connect the input cable to the enclosure. If the enclosure must be connected in parallel, remove the protective plug from the second cable gland and proceed identically for both cables.

Procedure

1. On the connector sealing plate, remove the sealing nut from the cable gland.

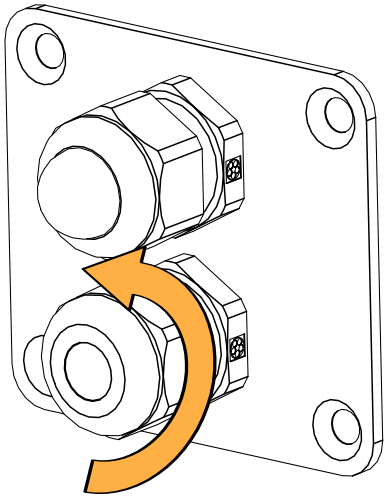

2. Insert the cable through the sealing nut and the cable gland.

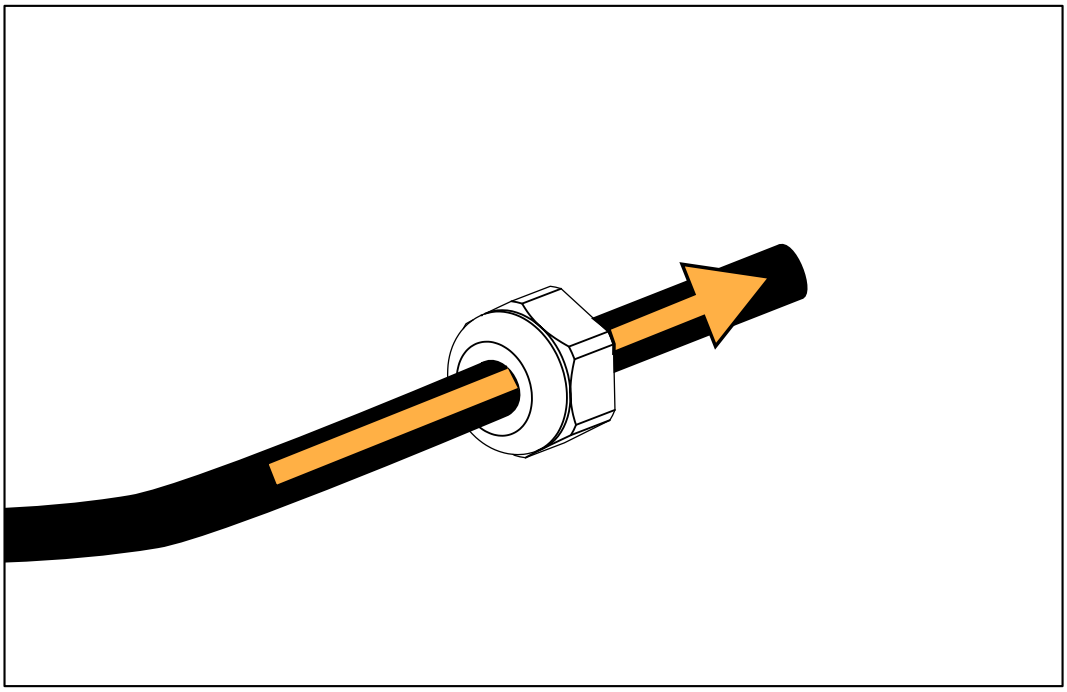

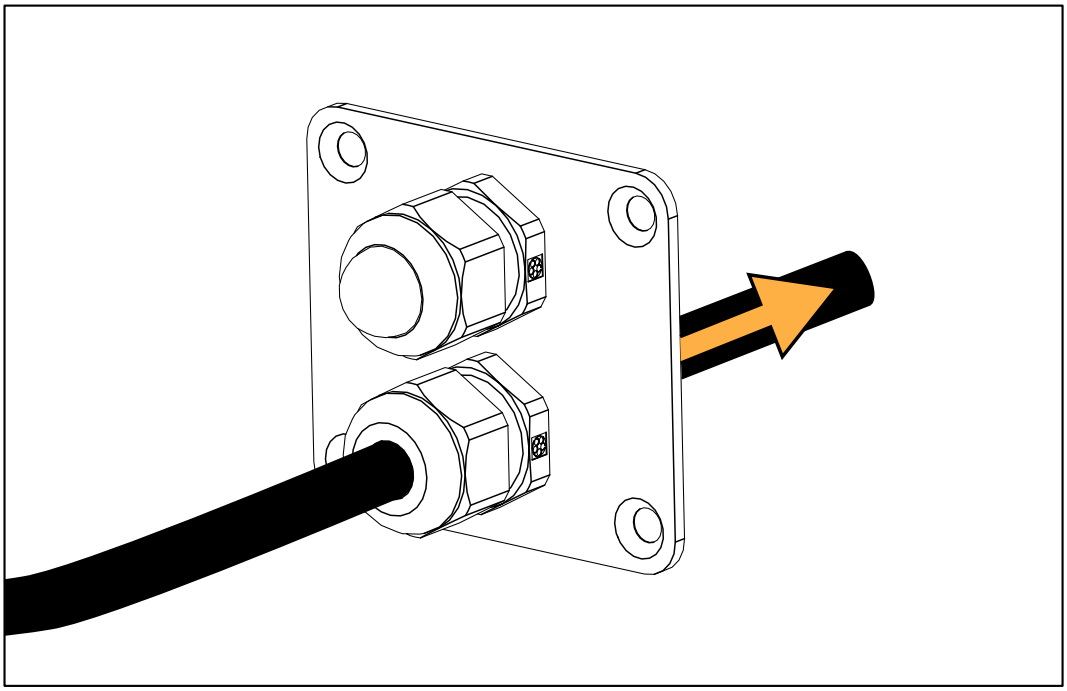

3. Strip the wires of the cable.

Refer to the cable manufacturer documentation for the wire color code.

4. Push the wires into the terminals.

If necessary, use a small tool in the hole next to the terminal to unlock it.

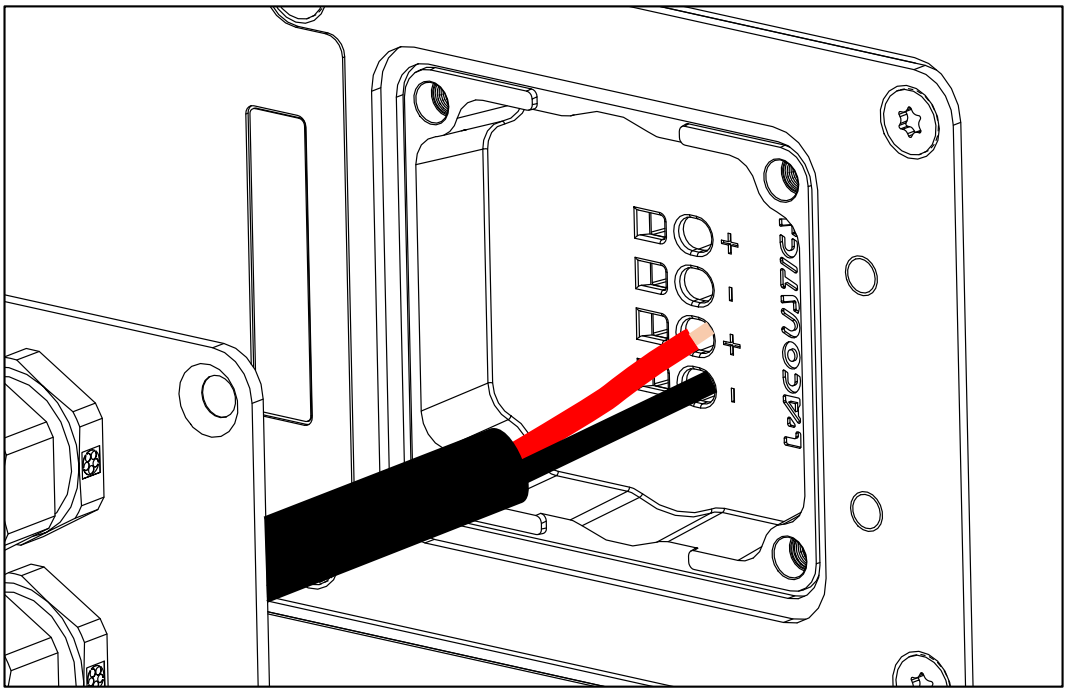

5. Secure the connector sealing plate to the connector plate.

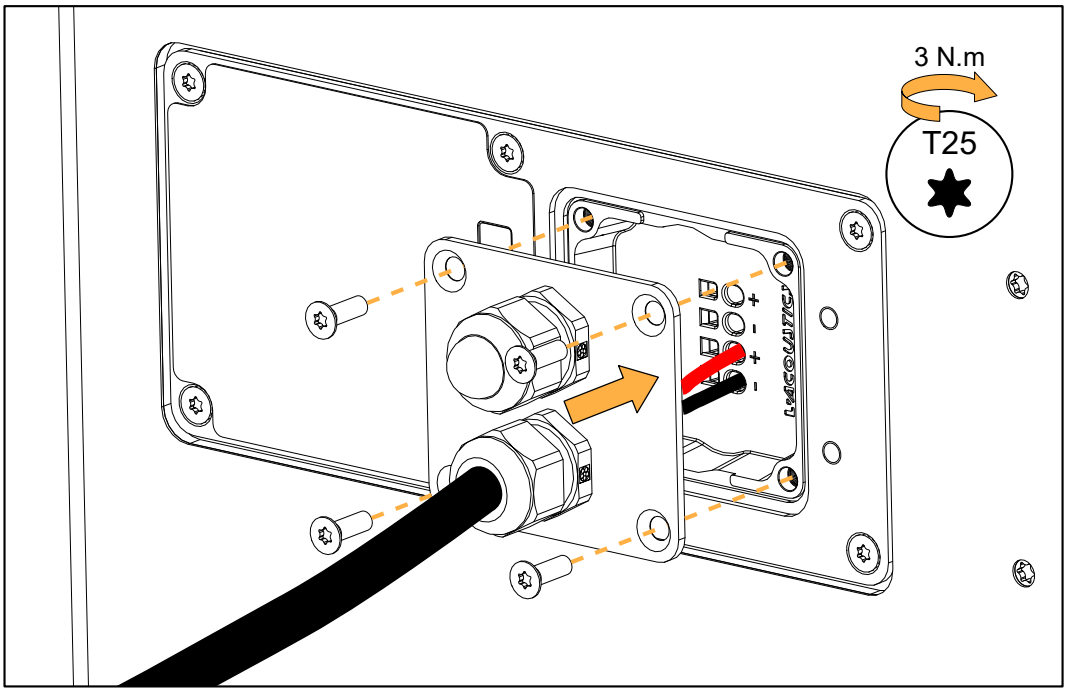

6. Tighten the sealing nut.

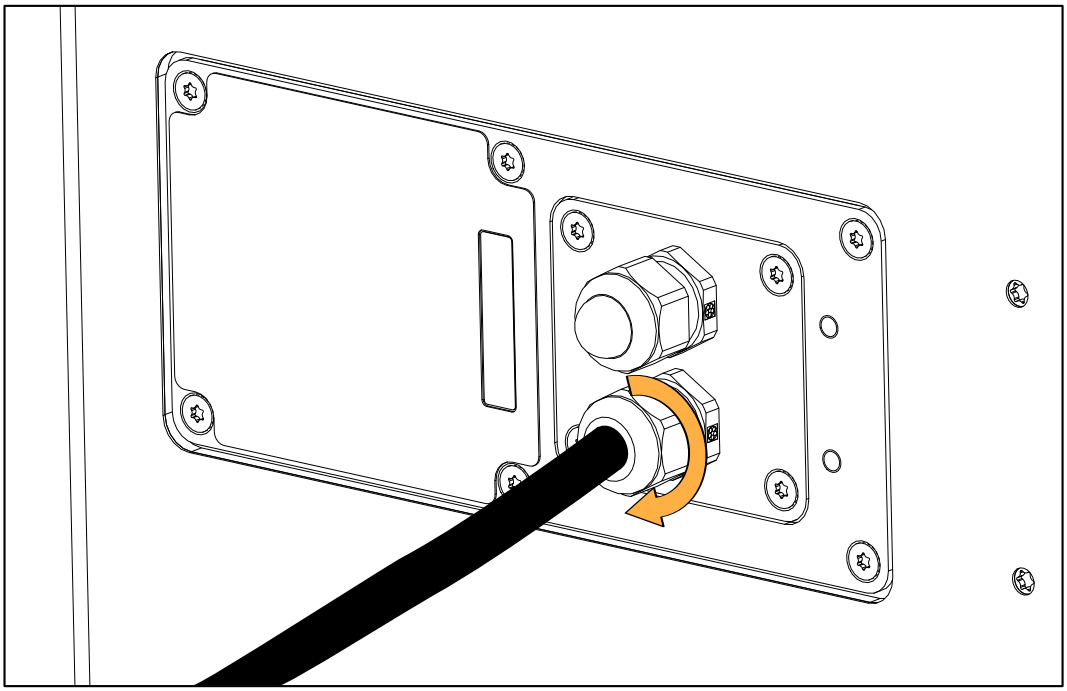

What to do next

To remove the cables use the small tool to unlock the terminals and pull on the wires.

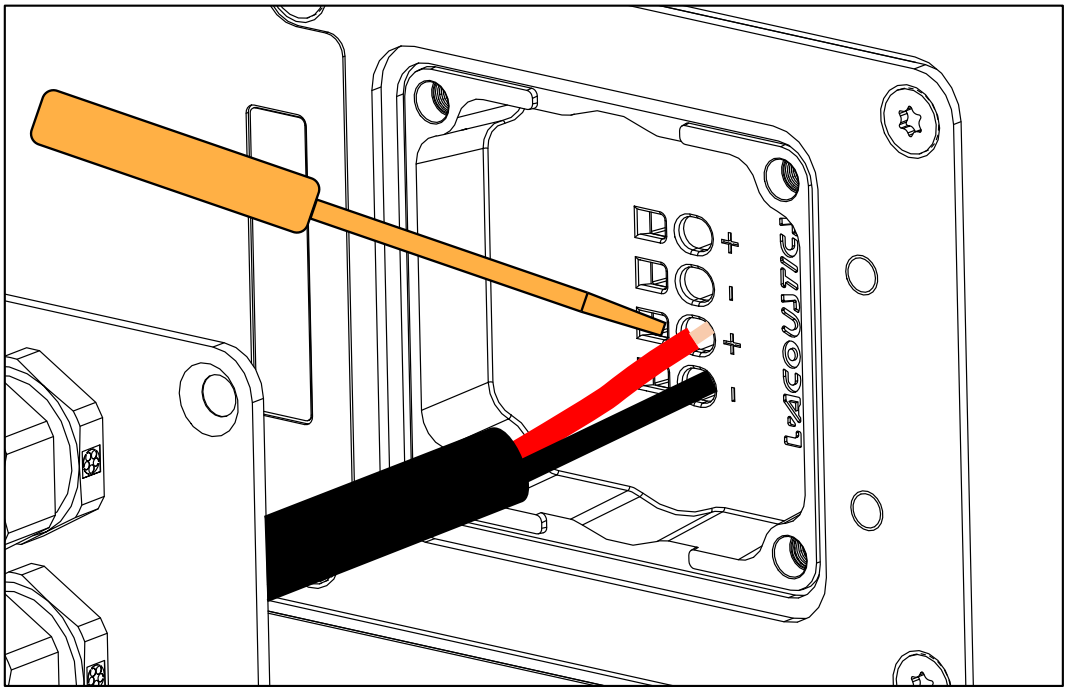

Corrective maintenance

KS21i

Introduction

This section contains the following maintenance procedures:

- Grill (p.64)
- Fixing bars (p.65)
- LF speaker (p.66)

For advanced maintenance, contact your L-Acoustics representative.

KS21i exploded view

In order to operate, follow the order outlined here. Each assembly refers to the corresponding Disassembly/Reassembly (D/R) procedure and the necessary repair kit.

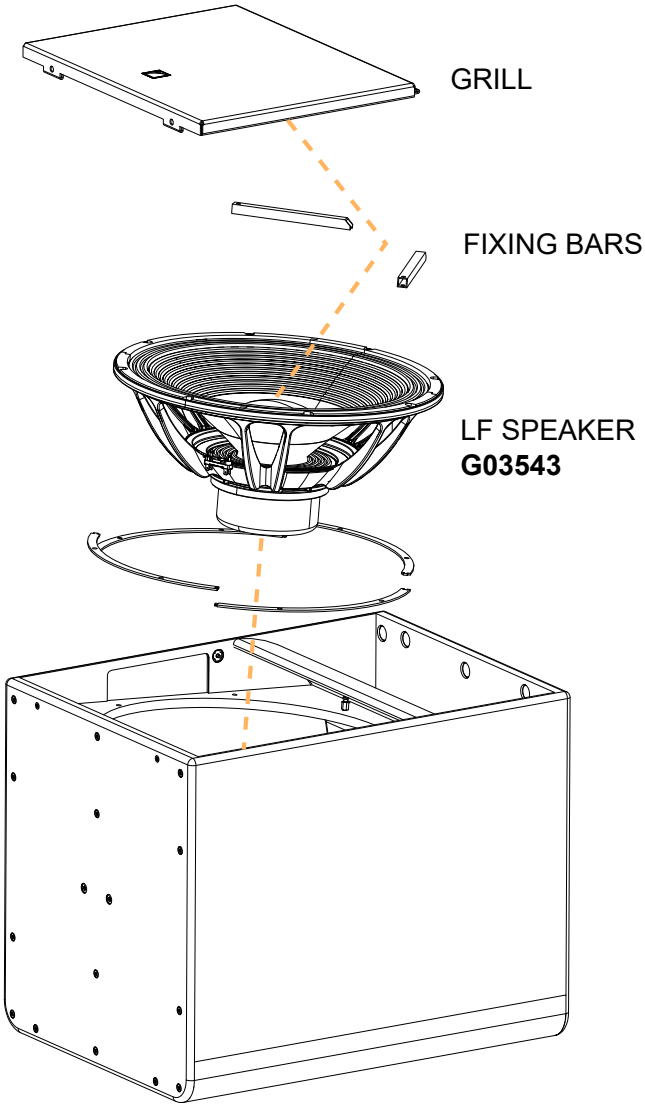

Disassembly and reassembly procedures

D/R - Grill

Tools

- torque screwdriver
- T30 Torx bit

Repair kit

G03543

KR loudspeaker 21" KS21i

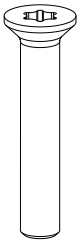

×2

S221

M6×35 Torx

Exploded view

For safety reasons, always use the new screws and spare parts provided in the KR.
If no new screws are available, use blue threadlocker.

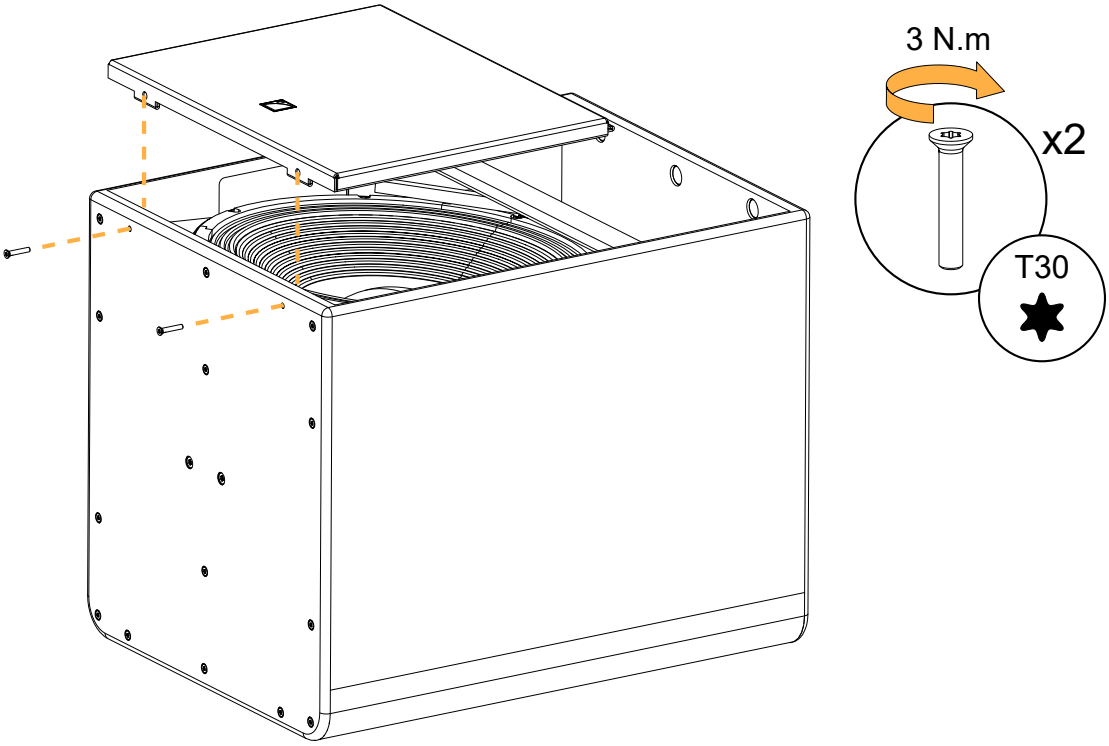

D/R - Fixing bars

Tools

- torque screwdriver
- T30 Torx bit

Repair kit

G03543

KR loudspeaker 21" KS21i

×2

S253

M6 × 55 Torx

Prerequisite

Grill removed. See Grill (p.64).

Exploded view

For safety reasons, always use the new screws and spare parts provided in the KR.
If no new screws are available, use blue threadlocker.

Slide the fixing bars under the vent panel to attach them to the studs, then secure them with the screws.

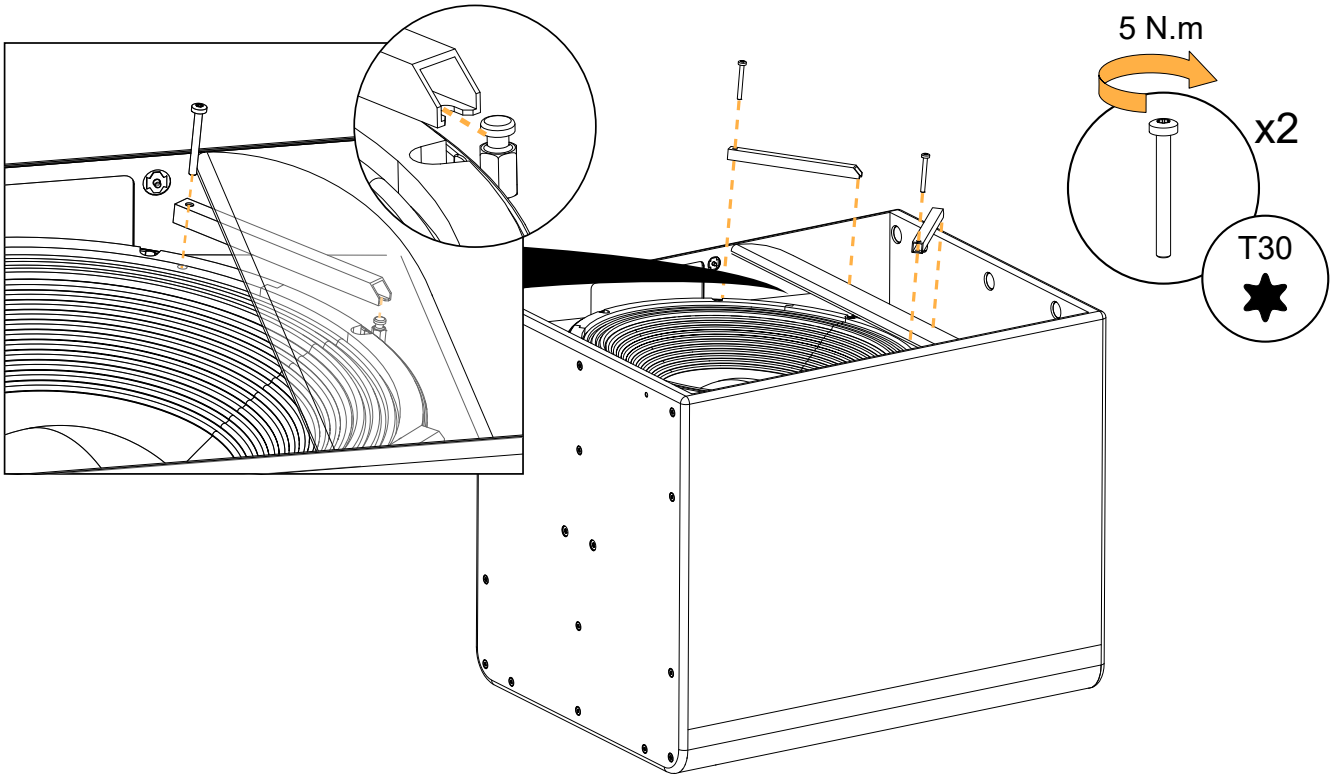

D/R - LF speaker

Tools

- torque screwdriver
- T30 Torx bit

Repair kit

G03543

KR loudspeaker 21" KS21i

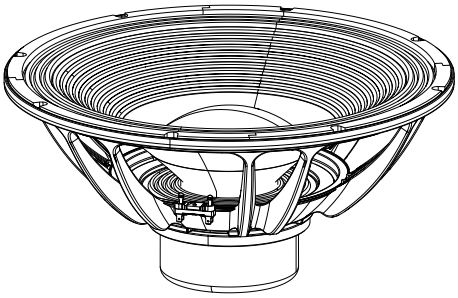

×1

17945

21" LF speaker - 8 Ω

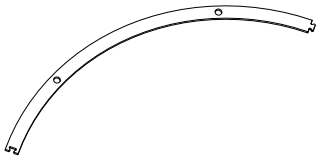

×4

102157

21" speaker gasket

×6

S247

M6×35 Torx

Prerequisite

Grill removed.

See Grill (p.64).

Exploded views

For safety reasons, always use the new screws and spare parts provided in the KR.
If no new screws are available, use blue threadlocker.

Tilt the speaker to remove it from the cabinet. Carefully disconnect the cables.

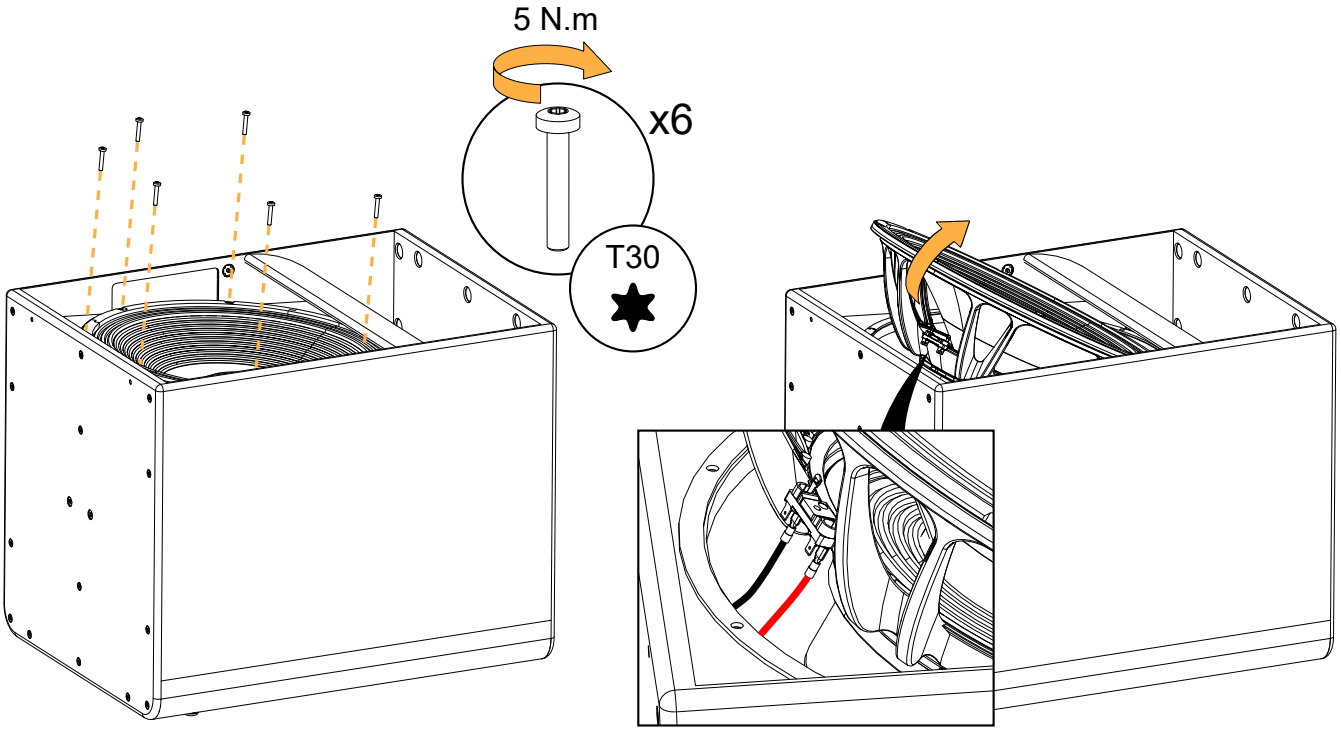

If the speaker gasket is damaged, remove and replace it.

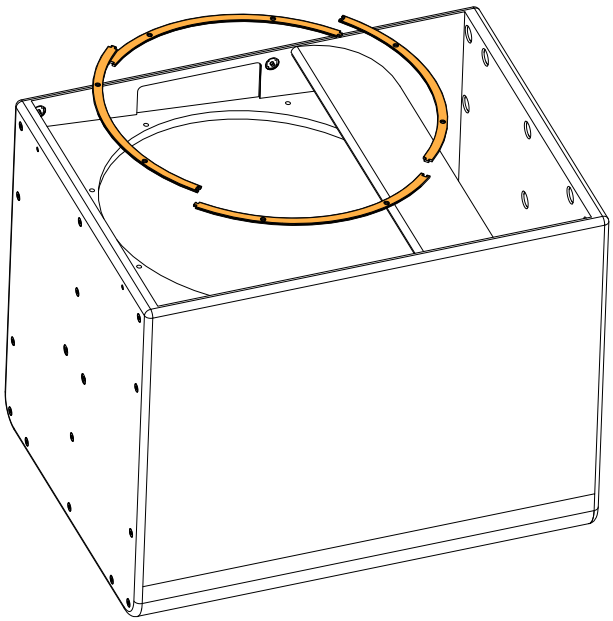

Specifications

KS21i specifications

Description	High power compact subwoofer: 1 x 21" (installation version), amplified by LA2Xi / LA4X / LA8 / LA12X
Low frequency limit (-10 dB)	31 Hz ([KS21_100])
Maximum SPL [1]	138 dB ([KS21_100]) with LA2Xi (bridge mode) / LA4X / LA8 / LA12X
	131 dB ([KS21_100]) with LA2Xi
Nominal directivity (-6 dB)	standard or cardioid configuration
Transducers	1 × 21" neodymium cone driver
Acoustical load	bass-reflex, L-Vents
Nominal impedance	8 Ω
Connectors	1 × 4-point terminal block with push-in connection
Rigging and handling	external rigging kits
	M6 inserts for rigging plates
	M8 inserts for A-U15i
	1 DIN580-compatible M8 threaded insert
Weight (net)	46 kg / 101 lb
Cabinet	premium grade Baltic beech and birch plywood
Front	coated steel grill
	acoustically neutral 3D fabric
Finish	dark grey brown Pantone 426 C
	pure white RAL 9010
	custom RAL code on special order
IP	IP55

[1] Peak level at 1 m under half space conditions using pink noise with crest factor 4 (preset specified in brackets).

KS21i dimensions

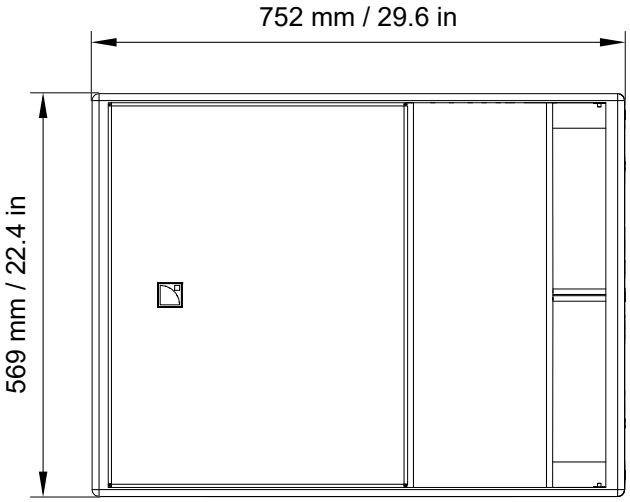

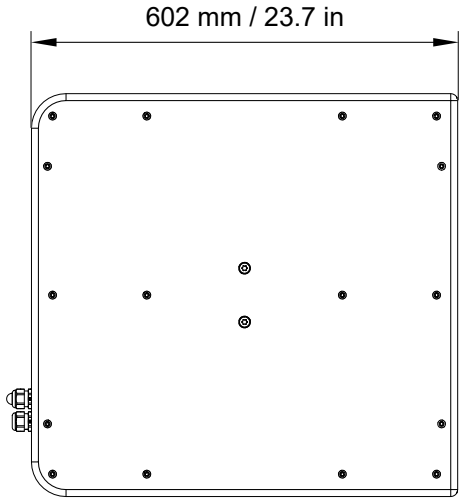

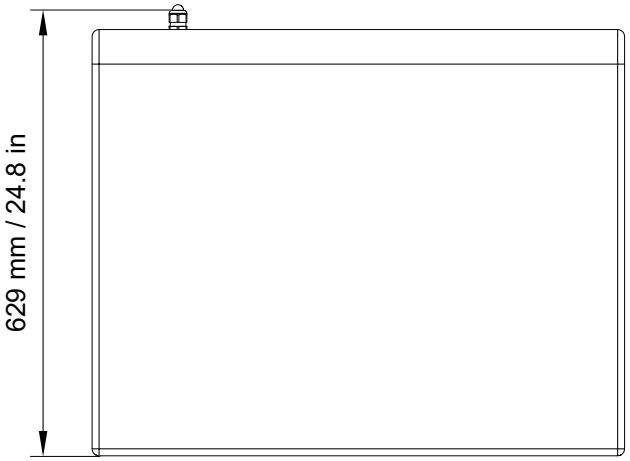

A15i-BUMP specifications

Description	Flying frame for vertical deployment of A15i and KS21i
Weight (net)	16 kg / 35 lb
Material	high grade steel with anti-corrosion coating

A15i-BUMP dimensions

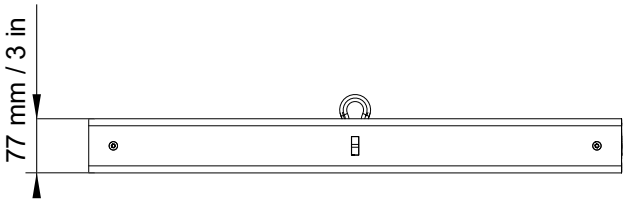

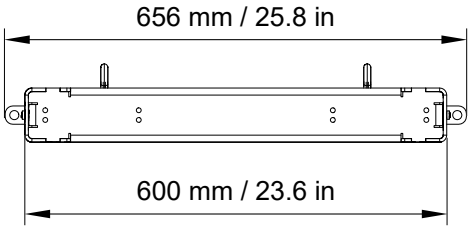

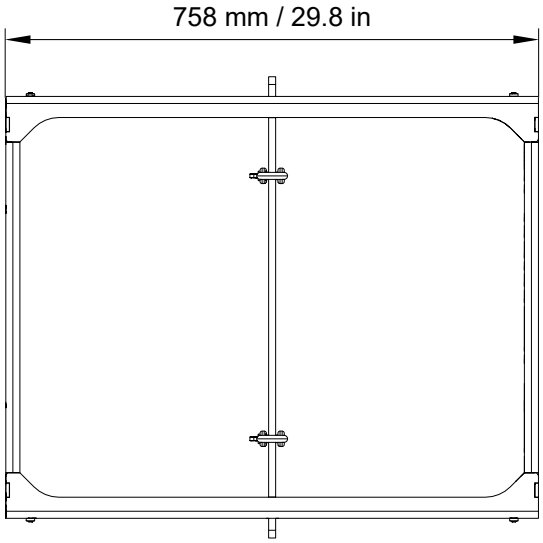

A-U15i specifications

Description	U-bracket for A15i and KS21i
Weight (net)	4.9 kg / 11 lb
Material	high grade steel with anti-corrosion coating

A-U15i dimensions

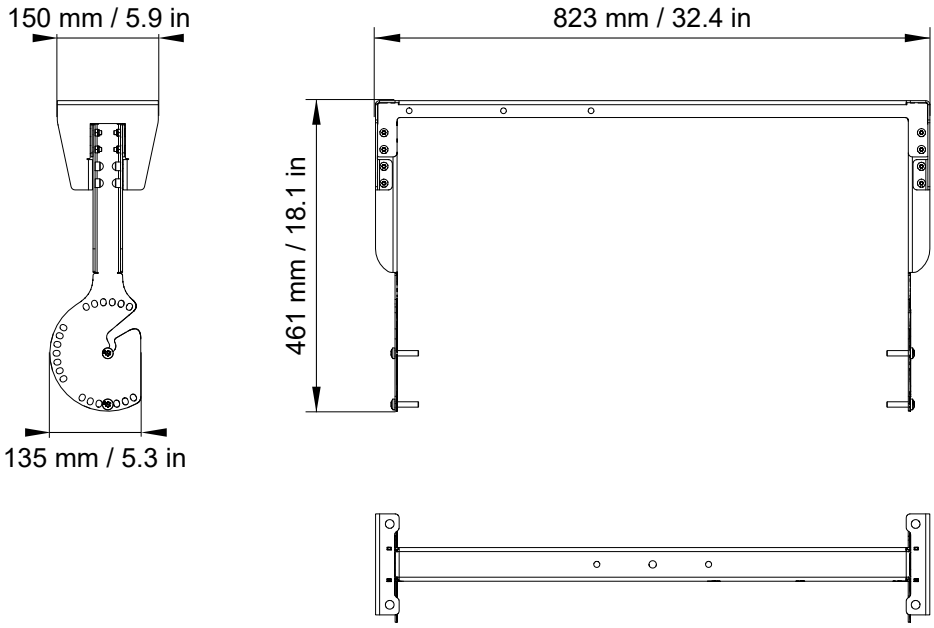

CLAMP250 specifications

Description	Clamp certified for 250 kg
Weight (net)	1.8 kg / 4 lb
Material	high grade steel with anti-corrosion coating

CLAMP250 dimensions

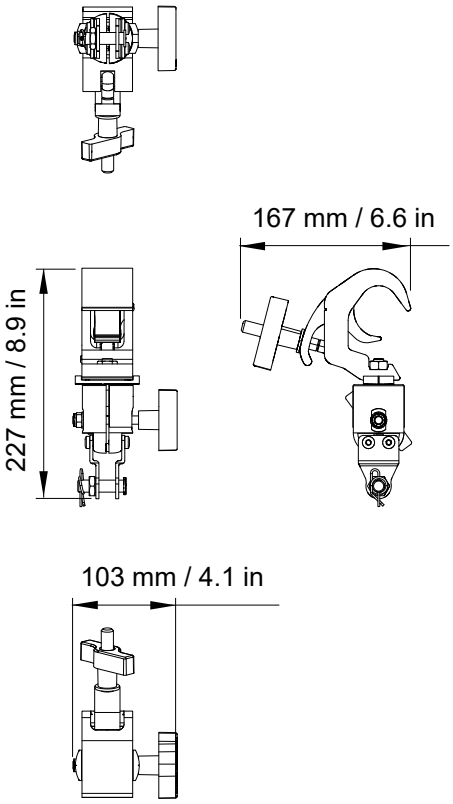

Ai-FIXBRACKET specifications

Description	Fastening bracket for A15i, A10i and KS21i
Weight (net)	0.45 kg / 1 lb
Material	high grade steel with anti-corrosion coating

Ai-FIXBRACKET dimensions

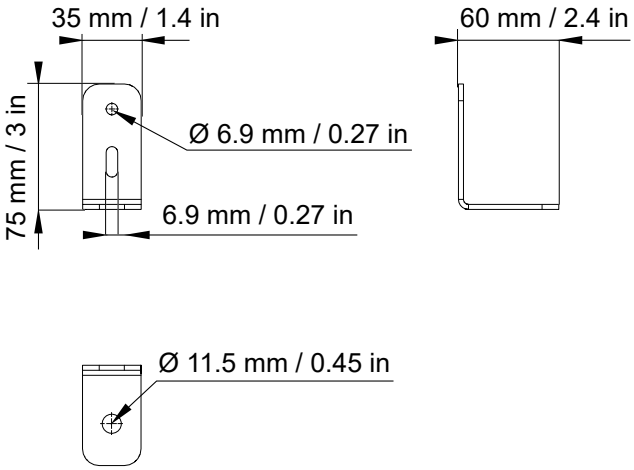

KS21i-SCREEN specifications

Description	Acoustically transparent front screen for KS21i
Weight (net)	3.1 kg / 6.8 lb
Materials	steel with anti-corrosion coating
	acoustically neutral 3D fabric

KS21i-SCREEN dimensions

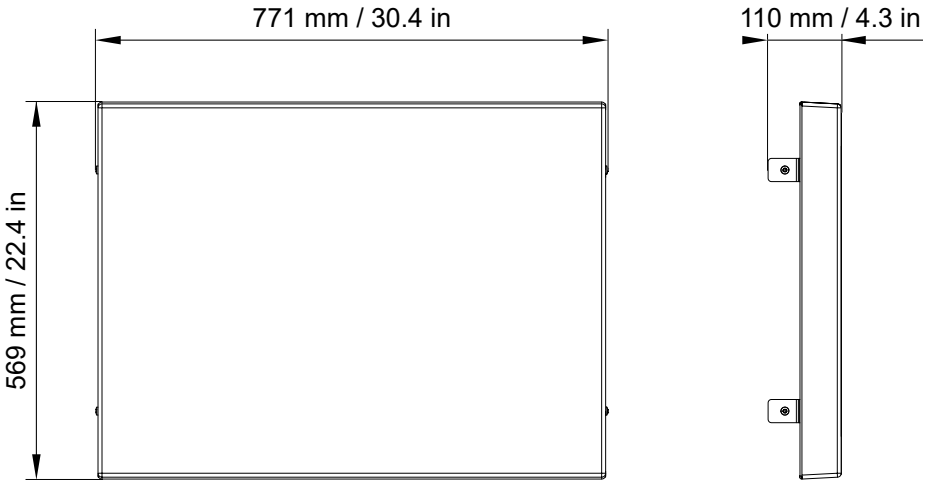

Configurations with A-U15i

KS21i

Inserts for U-bracket

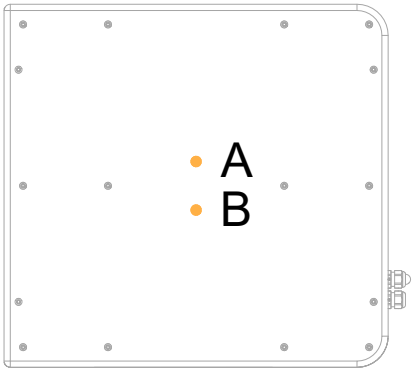

Both holes are used in every configuration.

configuration	number of enclosures	reference axis	coverage	resolution	holes used on enclosure
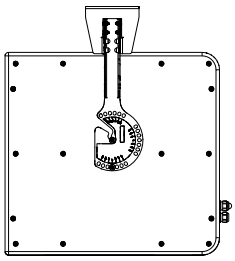	1	0° (site)	-30° / +30°	10°	A+B
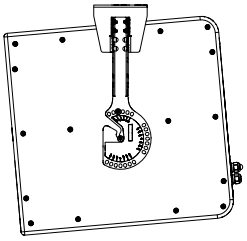	1	0° (site)	-5° / +5°	10°	A+B (center screw)
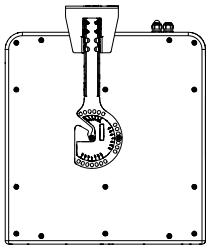	1	-90° (site)	-20° / +20°	10°	A+B
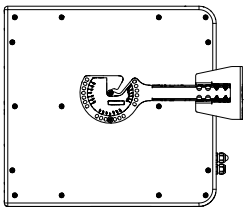	1	0° (site)	0° / +20° (wall)* -20° / +20° (pillar)	10°	A+B
	2	0° (site)	0° (wall)* -20° / +20° (pillar)	10°	A+B

configuration	number of enclosures	reference axis	coverage	resolution	holes used on enclosure
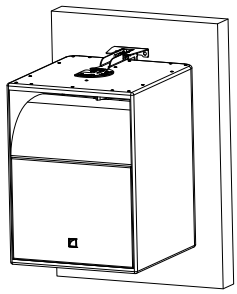	1	0° (azimuth)	0° / +20° (wall)* -20° / +20° (pillar)	10°	(-30° to +30°) A+B

* The cables and connectors at the back of KS21i limit the range of possible site or azimuth angles when the assembly is wall-mounted.

Recommendation for speaker cables

Follow the recommended maximum length for loudspeaker cables to ensure minimal SPL attenuation.

Cable quality and resistance

Only use high-quality fully insulated speaker cables made of stranded copper wire.

Use cables with a gauge offering low resistance per unit length and keep the cables as short as possible.

The table below provides the recommended maximum length for loudspeaker cables depending on the cable gauge and on the impedance load connected to the amplifier.

cable gauge			**recommended maximum length**					
			8 Ω load		**4 Ω load**		**2.7 Ω load**	
mm^2	SWG	AWG	m	ft	m	ft	m	ft
2.5	15	13	30	100	15	50	10	33
4	13	11	50	160	25	80	17	53
6	11	9	74	240	37	120	25	80

Use the more detailed L-Acoustics calculation tool to evaluate cable length and gauge based on the type and number of enclosures connected. The calculation tool is available on our website:

https://www.l-acoustics.com/en/installation/tools/

Specifications for custom rigging systems

Dimensions

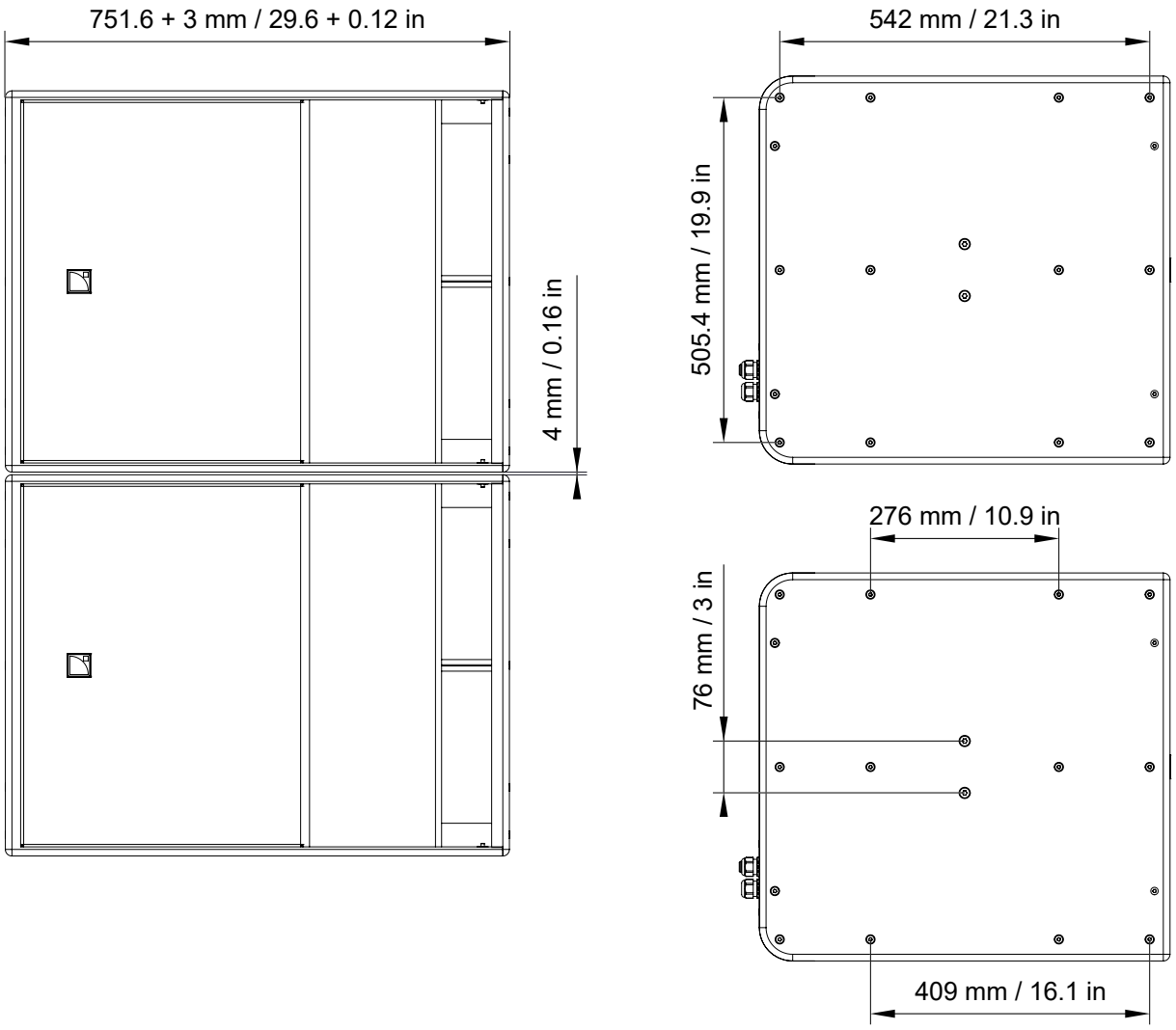

KS21i

Screws

- The grade and threaded length of screws used on the enclosures depend on the design of the metal sheets on the array.
- Recommended screws for a 3 mm thickness metal sheet: M6x18.

Risk of damaging the fins if the length is not respected

Adapt the length of the screws according to the thickness of the sheet.

- Prevent screws from loosening (threadlocker, spring washer...).

Threaded inserts

- Ultimate Tensile Strength: 1160 N
- Ultimate Shear Strength: 5370 N
- Recommended torque: 5 N.m for M6 inserts, 7 N.m for M8 inserts

L-Acoustics
13 rue Levacher Cintrat - 91460 Marcoussis - France
+33 1 69 63 69 63 - info@l-acoustics.com
www.l-acoustics.com

L-ACOUSTICS
GROUP