LONG THROW
K SERIES
CONFIGURATION AND KIT LIST

K3

Date : 10/2020

K3 KIT LIST

		H STANDARD			KX STANDARD	
K3 SYSTEM	**DESCRIPTION**	**12 K3**	**12 K3 4 KS28**	**16 K3 8 KS28**	**24 K3 8 KS28**	**32 K3 16 KS28**
K3	2-way active WST® enclosure: 2 x 12" LF + 4" HF diaphragm	12	12	16	24	32
K3-CHARIOT	Chariot for up to 4 K3	3	3	4	6	8
K3-CHARIOTCOV	Protective cover for 4 K3 on K3-CHARIOT	3	3	4	6	8
K3-CHARIOTLID	Protective cover for 4 K3 on K3-CHARIOT	3	3	4	6	8
K2-JACK	4 tilt adjustment screw jacks + bar for K2-CHARIOT	0	0	0	0	0
K3-BUMP	Flying frame for K3	2	2	2	2	4
K3-BAR	Extension bar for K3-BUMP	2	2	2	2	4
DELTA 1.5T	Azimuth angle tuning accessory 1.5T	2	2	2	2	4
K3-TILT	Rigging element for stacking K3 on KS28	0	2	2	2	4
LA-RAKMOUNT	Mounting cradles for 1 LA-RAK	0	0	2	2	4
K2-LASERMOUNT	K2 Lasermount (compatible TEQSAS / SSE Prosight / Align Array / KSG)	0	0	0	0	0
K3-BUMPFLIGHT	Modular flightcase for 1 K3-BUMP and rigging elements	2	2	2	2	4
K3-BUMPFLIGHTADDLAYER	K3-BUMPFLIGHT extension for one additional K3-BUMP and rigging elements	0	0	0	0	2
KS28						
KS28	Flyable subwoofer 2 x 18"	0	4	8	8	16
KS28-OUTRIG	Stability bars for KS28	0	2	2	2	4
KS28-PLA	Removable front dolly on wheels for 1 x KS28	0	4	8	8	16
KS28-COV	Protective cover for 1 x KS28	0	4	8	8	16
KS28-CHARIOT	Chariot for up to 4 x KS28	0	0	0	0	0
KS28-CHARIOTCOV	Protective cover for 3 or 4 x KS28 on KS28-CHARIOT	0	0	0	0	0
AMPLIFIED CONTROLLERS						
LA-RAK II AVB	Touring rack AVB (9U with 3 LA12X/2 LS10 and signal and power distribution panels)	0	0	2	2	4
LA12X	Amplified controller 4 x 2600 W/4 Ohms	2	4	0	0	0
L-CASE	2U Electronics transport and protection case	2	4	0	0	0
P1	Digital audio processor and measurement platform: 20 x 18 mic/line AES/EBU and AVB.	0	0	1	1	2
LS10	10-port AVB Switch.	0	0	2	2	4
LS10 RAKSHELF	1U Rack Shelf for two LS10	0	0	1	1	2
CABLES						
SP.7	Speaker cable: 4 x 4mm² NL4 0.7m length	8	8	8	16	16
SP25	Speaker cable: 4 x 4mm² NL4 25m length	0	2	0	0	0
SP-Y1	Y split speaker cable: 2 x 2.5mm² NL4 1m length (with CC4FP adaptator)	0	2	0	0	0
DO.7	Speaker cable: 8 x 4mm² CA-COM 0.7m length	0	0	0	0	0
DO25	Speaker cable: 8 x 4mm² CA-COM 25m length	2	2	6	6	12
DOFILL-LA8	Speaker cable extension for active 2 way enclosures CA-COM > 2 NL-4 length 3.5m	2	2	4	4	8
DOSUB-LA8	Speaker cable breakout for passive enclosures CA-COM > 4 NL-2 length 5m	0	0	2	2	4
POW2	32A Power Link 2m	0	0	2	2	4
DOM2	6 pair multiconductor cable AMP LINK 2m length	0	0	2	2	4
DOM45	6 pair multiconductor cable CROSS LINK 45m length	0	0	1	1	2
DOMF	Multipair cable adapter LINK-BREAKOUT 6 LR3 female	0	0	1	1	2
DOMM	Multipair cable adapter LINK-BREAKOUT 6 LR3 male	0	0	0	0	1
DOMP-2	Male/Male adapter LINK-EXTEND for AMP & CROSS LINK	0	0	0	0	1
TRAINING						
TRAINING	On site training (per day)	2	2	2	2	2
TRAVEL-LOCAL	Local travel and meals	0	0	0	0	0
TRAVEL-SHORT	Short haul travel meals and lodging	0	0	0	0	0
TRAVEL-MEDIUM	Medium haul travel meals and lodging	1	1	1	1	1
TRAVEL-LONG	Long haul travel meals and lodging	0	0	0	0	0
TRAVEL-EXTRA	Meals and lodging cost for any additional day on site	0	0	0	0	0
TRA-VOU1	1 day level 1 training (valid for 1 participant)	0	0	0	0	0
TOOLKIT						
TECH TOOLCASE	System technician tool case fully loaded	1	1	1	1	1
MAINTENANCE TOOLCASE	Maintenance tool case fully loaded	0	0	1	1	1
SERVICE STARTER KIT K3						
G03518	Kit Diaphragm for K3 (4" Driver - 8 ohms)	1	1	2	2	2
G03522	Kit HP K3 Driver 4" - 8 ohms	1	1	2	2	2
G03523	Kit HP 12" K3 - 8 ohms	2	2	4	4	4
KR PIN163	Kit K1 6 ball head pins	1	1	2	2	2
KR PIN1394	Kit 2 x pin 1394	1	1	2	2	2
KR PIN1542	Kit 2 x pin 1542	1	1	2	2	2
SERVICE STARTER KIT KS28						
G03229	KR speaker KS28	0	2	2	2	2

12 K3 (H standard)

12 K3 & 4 KS28 (H Standard)

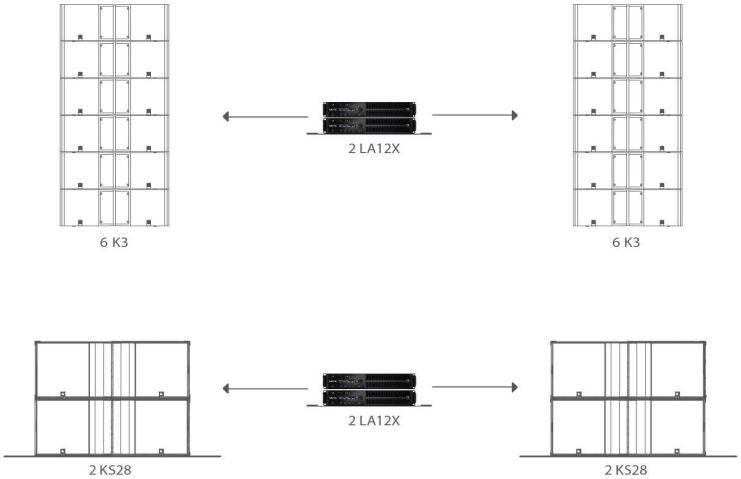

16 K3 & 8 KS28 (H Standard)

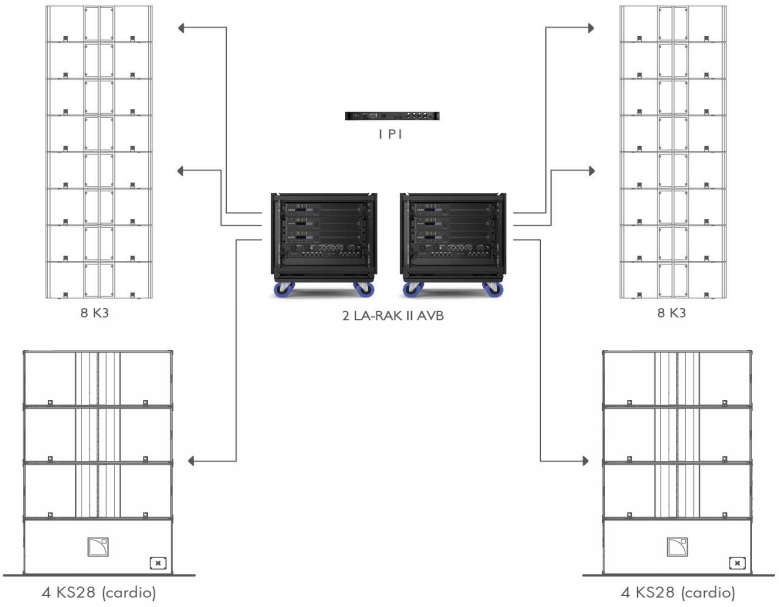

24 K3 & 8 KS28 (KX Standard)

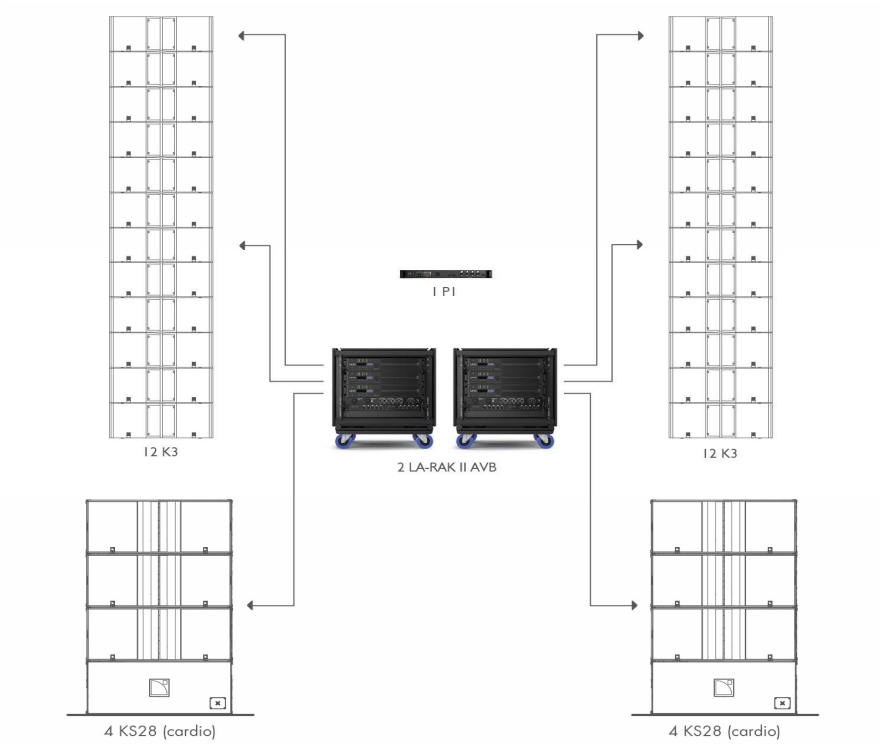

32 K3 & 16 KS28 (KX Standard)

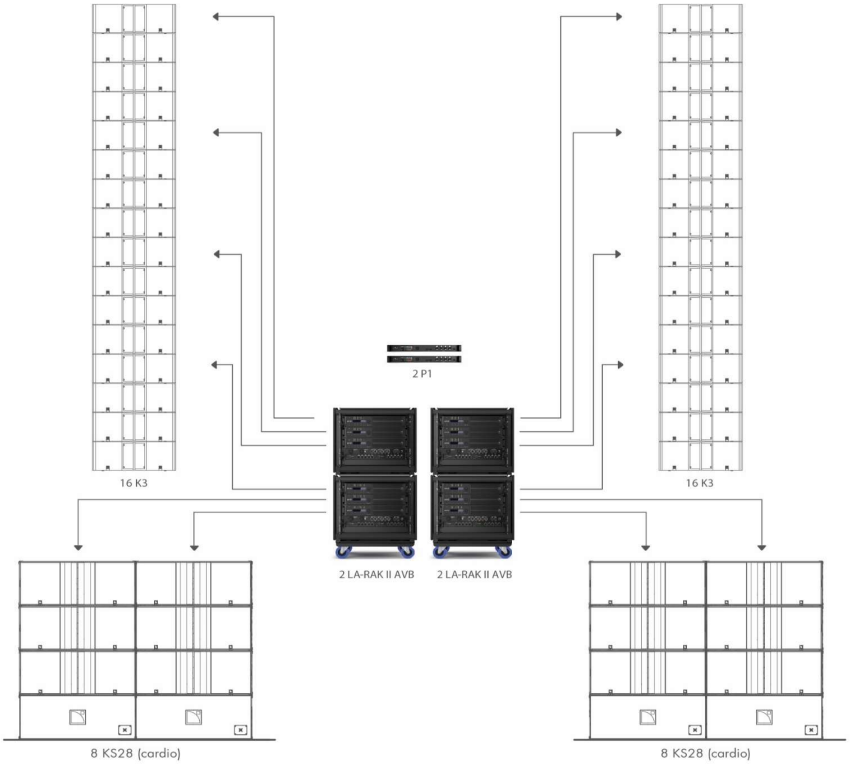

AVB CONNECTIONS FOR AUDIO AND CONTROL

KIT 24 K3 + 8 KS28

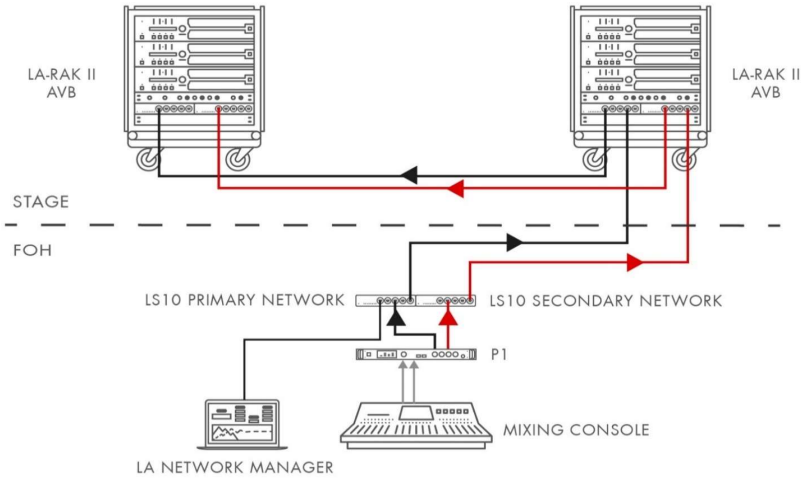
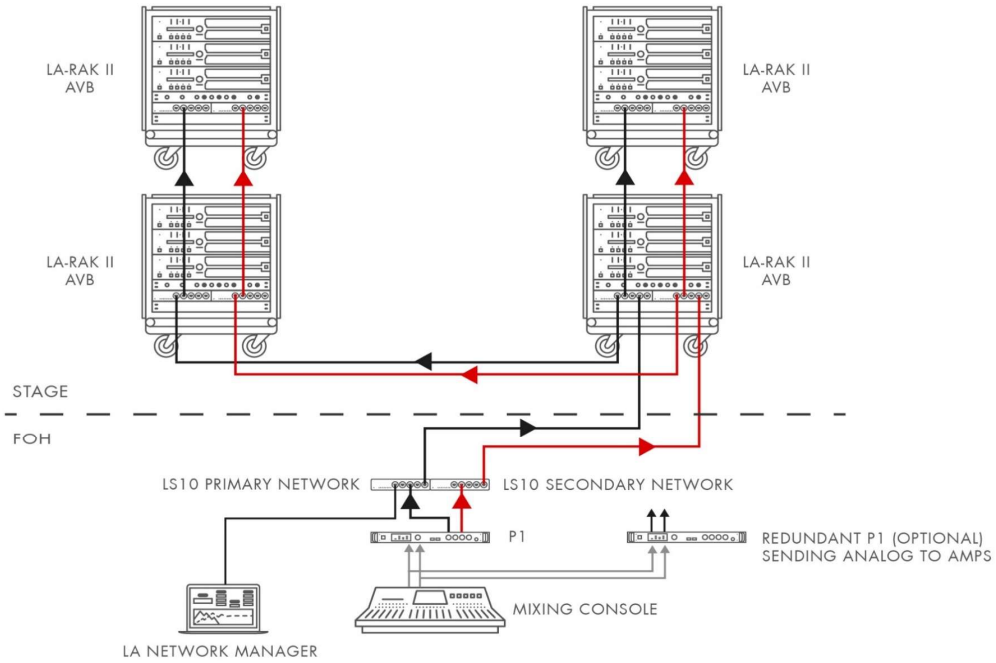
KIT 36 K3 + 16 KS28