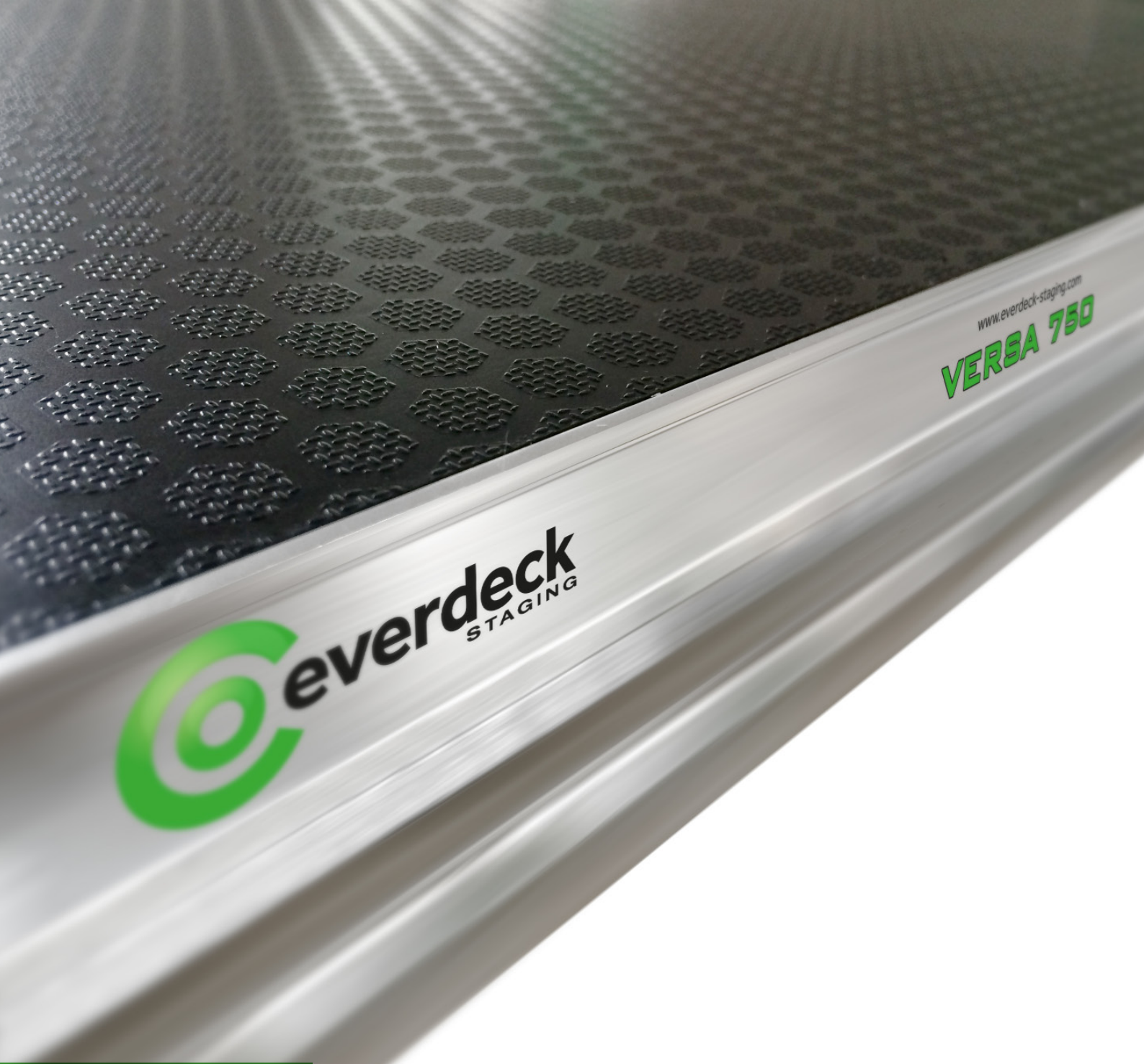

ASSEMBLY MANUAL FOR EVERDECK VERSA 750 DECK

Read this manual carefully and understand all of it's contest before you assemble the Everdeck stage panels.

everdeck STAGING

Version 1 , OCT 2017

LIMITATION OF USE and IMPORTANT NOTICE:

Doublet stage deck dimension up to 244cm x 122cm on 4 legs can be used to carry loads up to 750kg/m². The maximum horizontal load is set at 10% of the maximum total vertical load.
Make sure only Everdeck original components are used.

USE OF DIFFERENT LEG TYPES IN THE EVERDECK Versa750 DECKS*

Leg	80cm	100cm	120cm	140cm	160cm	180cm
48,3x3 6082 T6	625kg	500kg	450kg	400kg	340kg	n.a.
50x50x3 6082 T6	750kg	750kg	500kg	500kg	500kg	350kg
60x60x2 6082 T6	750kg	750kg	750kg	500kg	500kg	500kg
48,3x3,2 S235	750kg	750kg	500kg	500kg	500kg	500kg

* max. Capacity/m² using different leg types and heights

2x1 m

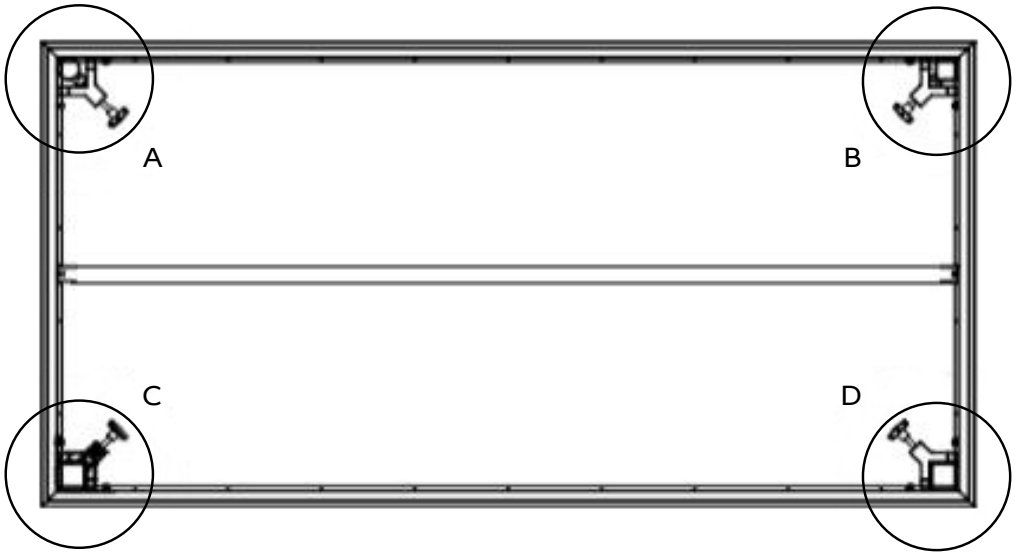

8x4 feet

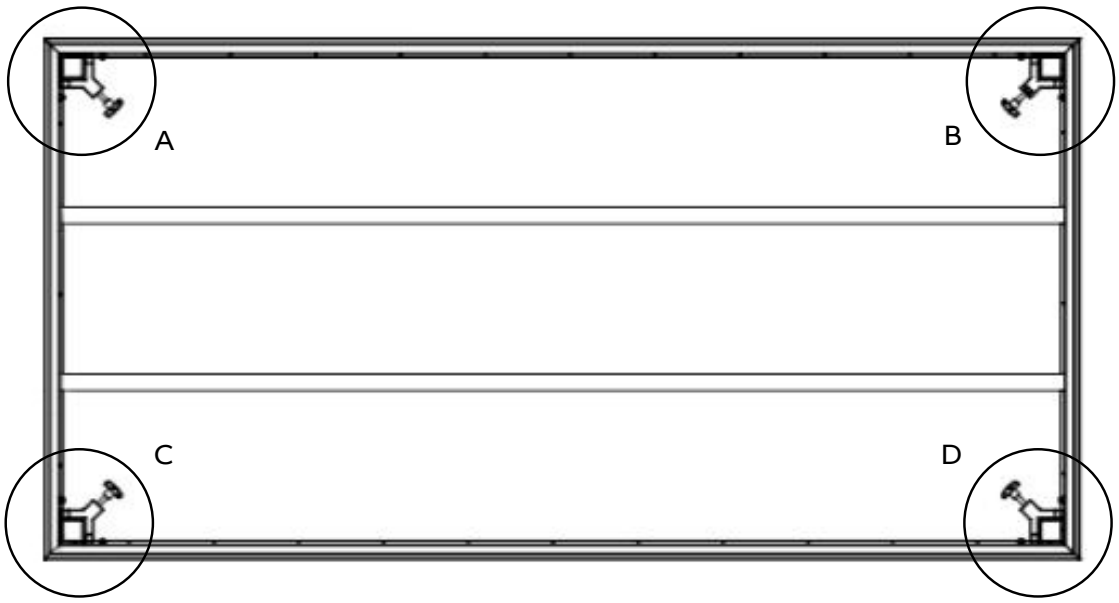

everdeck STAGING

ASSEMBLY INSTRUCTION:

Tools needed:
Allen key size 8
Allen key size 10
Leveler

NOTE: Please check all the connections, deck to deck, leg to leg and whole stability of the system before loading the stage.

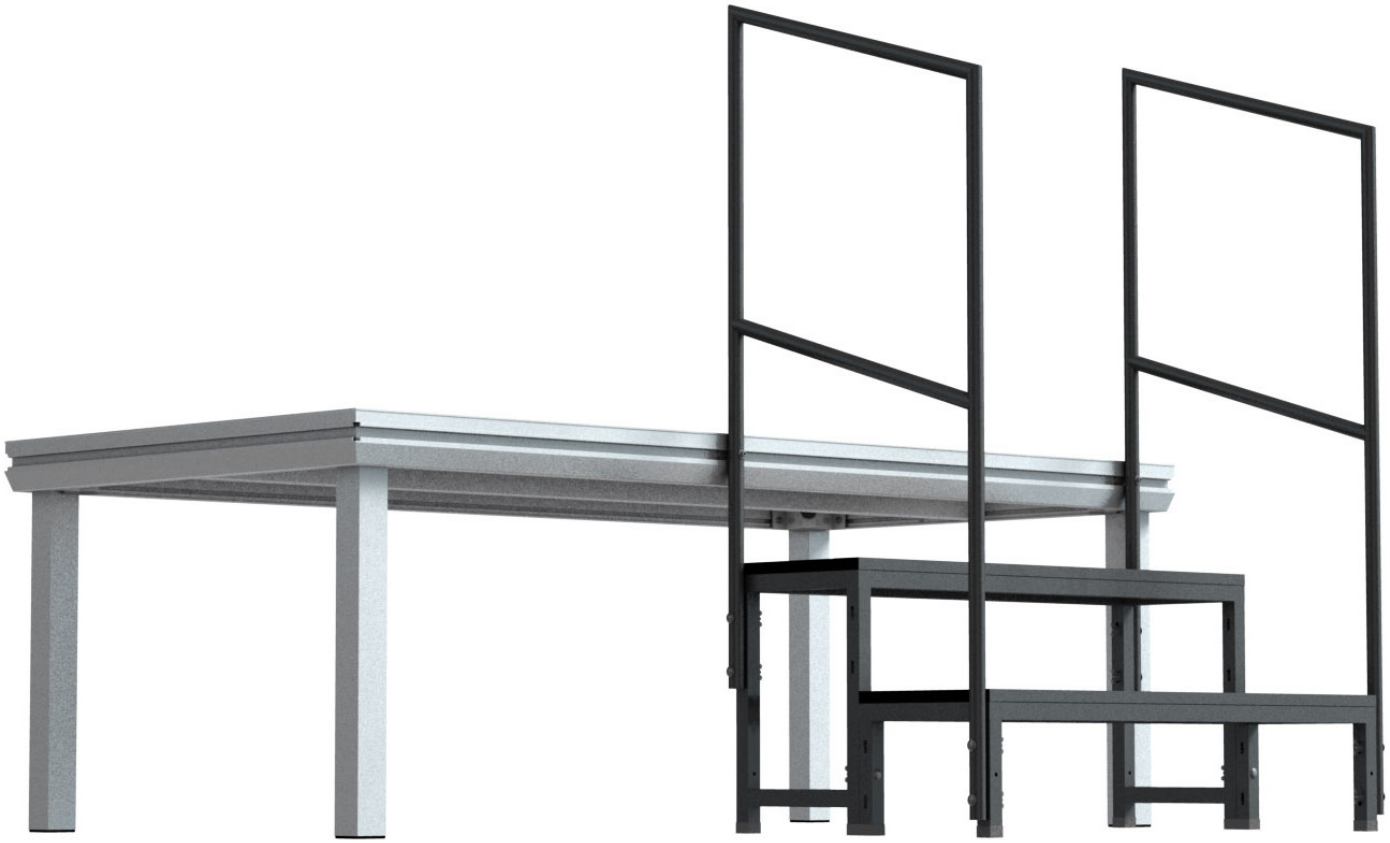

everdeck STAGING

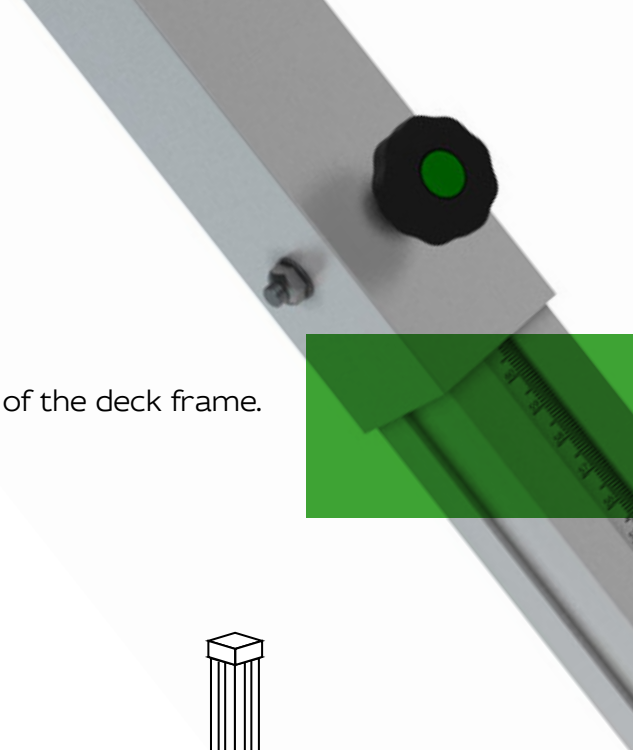

LEG ASSEMBLY:

Put the required leg type in the leg adapter at the underside of the deck frame.
Tighten the leg by tightening the knob.
Do this at all 4 corners.
Tip the deck over and put it in the right possition.

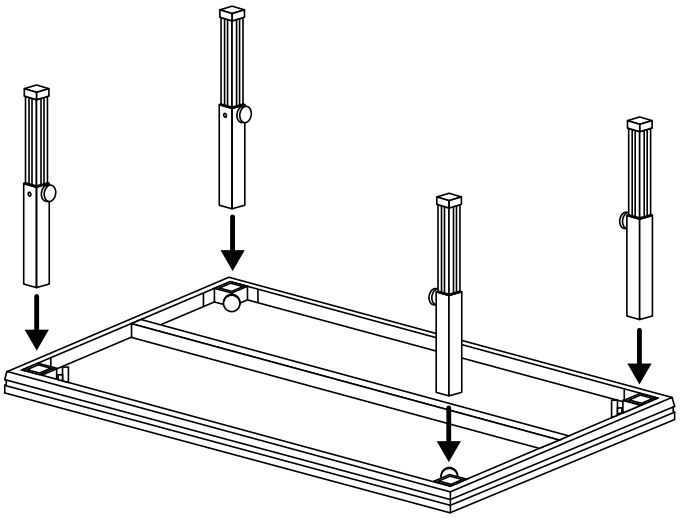

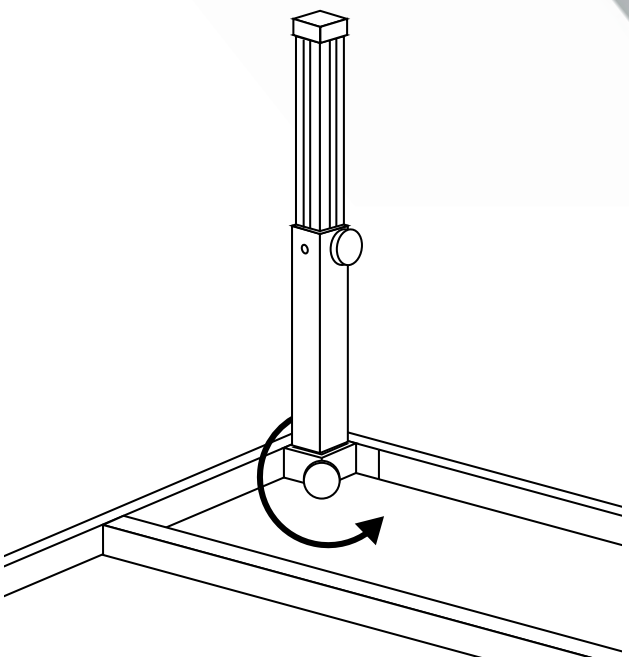

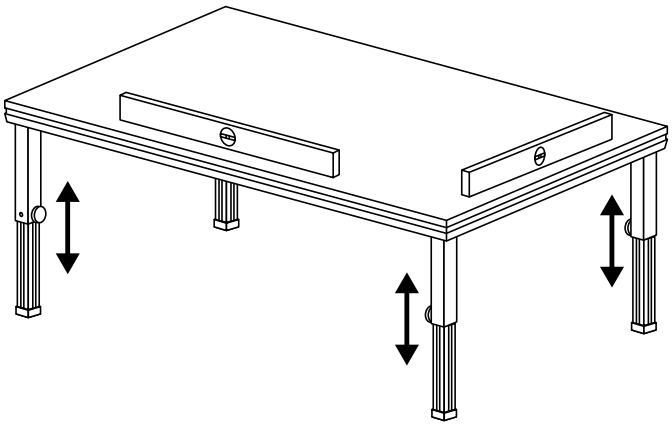

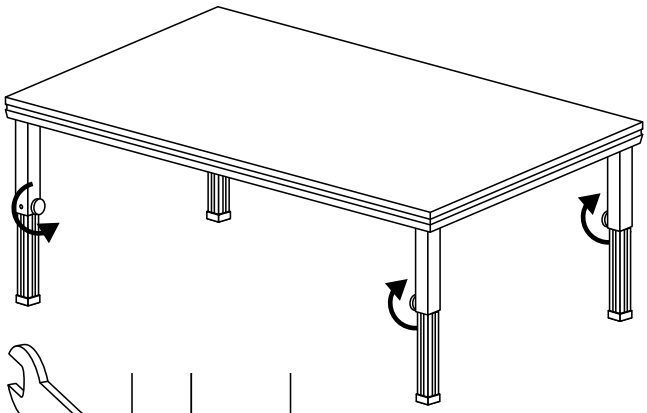

! **IMPORTANT** (telescopic legs)

After levelling the stage height fasten the securing self-locking nuts as shown on the diagram (Detail - telescopic legs). It is forbidden to use the stage decks without securing the legs.!

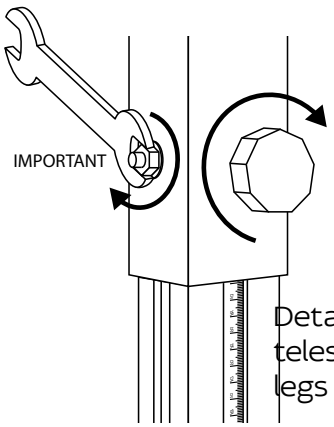

Detail - telescopic legs

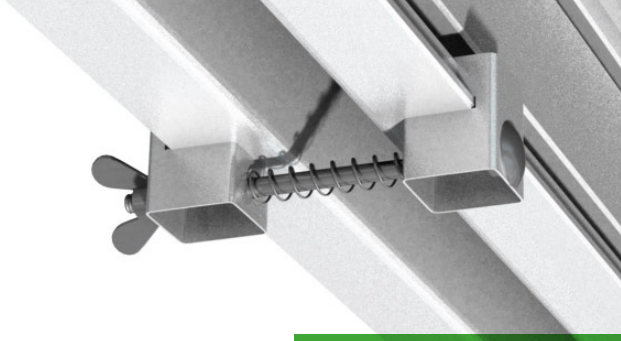

SELF LEVELING INSERT

Level the decks using the self leveling insert, use 3 pcs on 2/1m deck. 1pcs of deck leveler on one meter side and 2 pcs on to meter side.

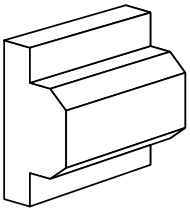

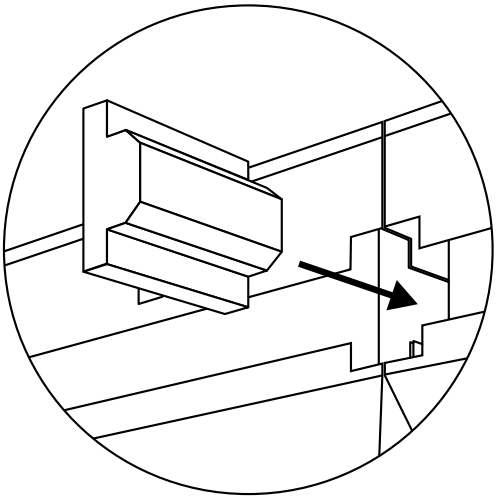

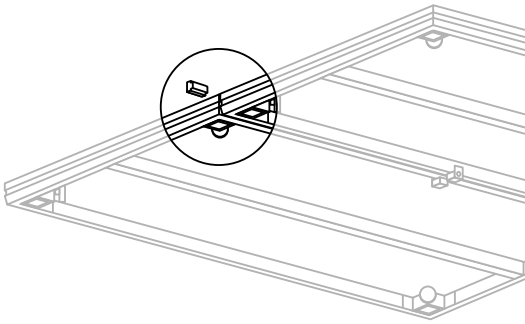

DECK TO DECK CLAMP

Connect each deck element by using deck to deck clamp.
Use 3 clamps per deck, one on the short edge, and 2 on the long edge.
Repeat this as often as required to create the stage size required.

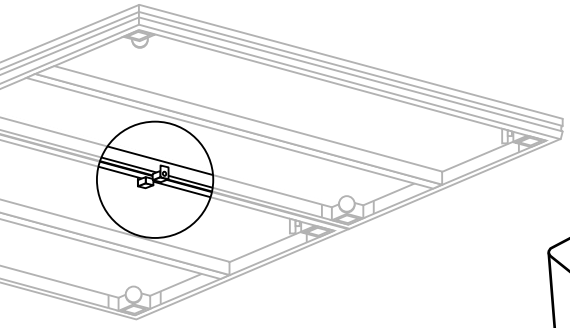

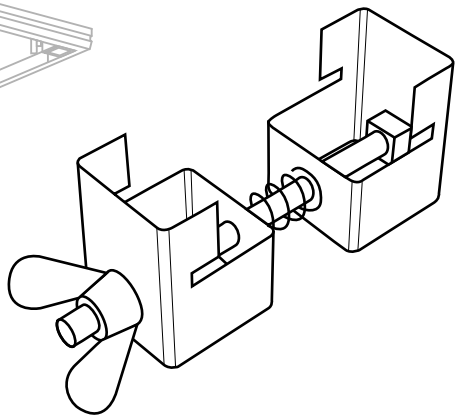

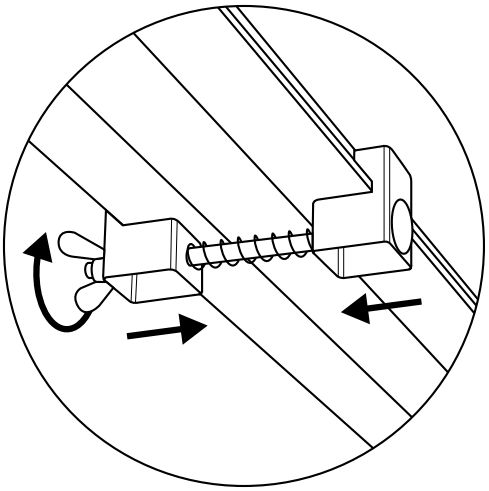

everdeck STAGING

LEG TO LEG CLAMP

Use one single clamp for two legs, position them max 20cm underneath the deck.

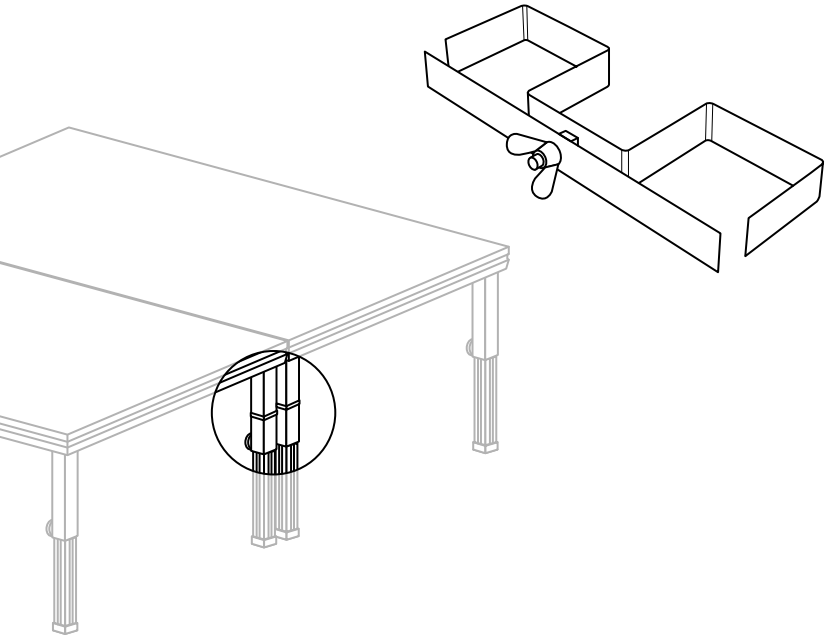

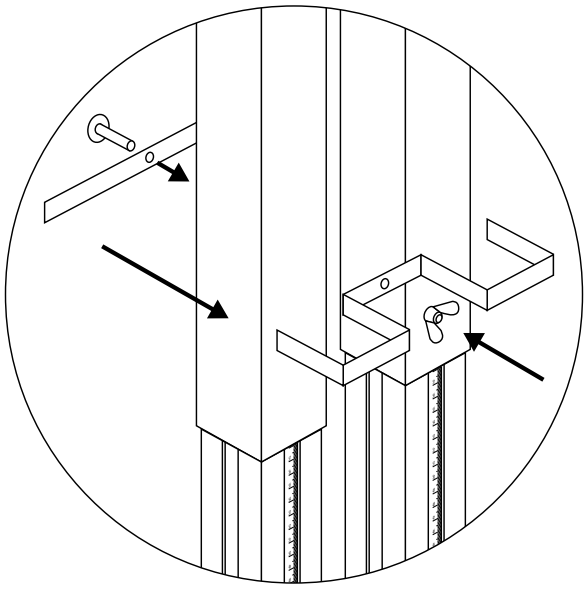

LEG TO LEG CLAMP

Use one double clamp for 4 legs, position them max 20cm underneath the deck.

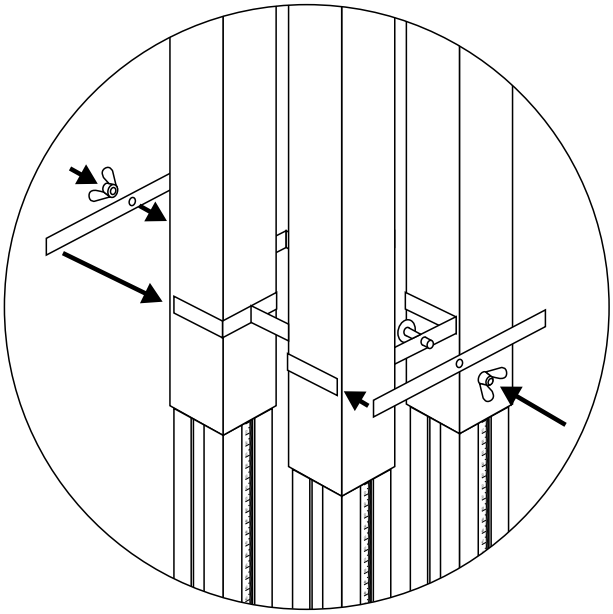

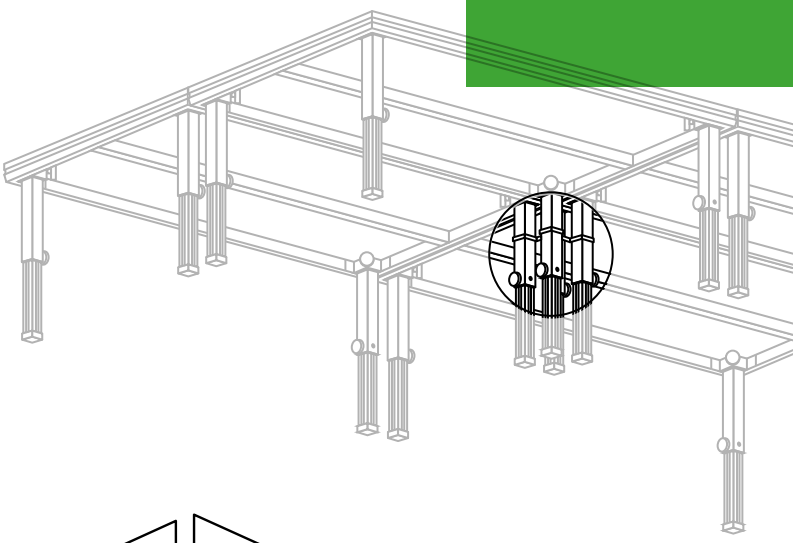

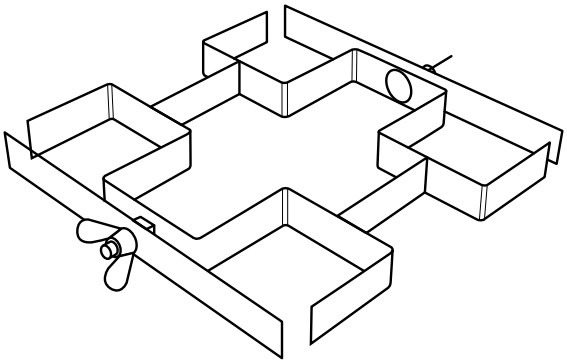

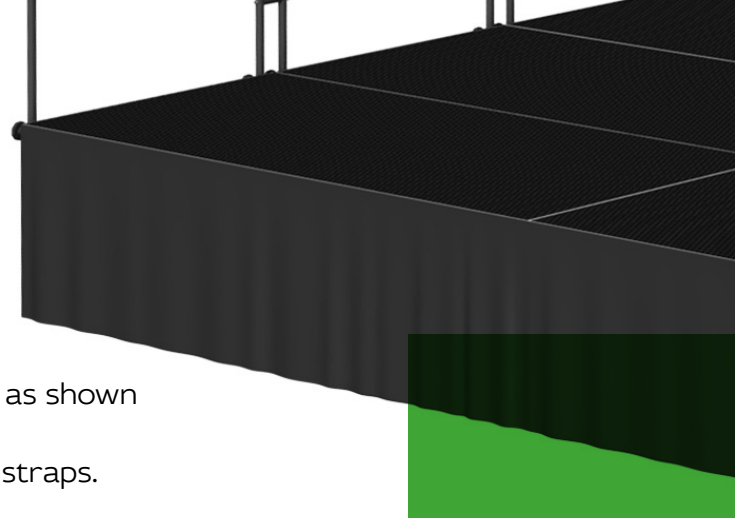

SKIRTING

1. Slide the aluminium skirt profile into the deck profile as shown on below diagram and fasten it with an alley key.
2. Attach the skirt to the skirt profile using the velcro straps.

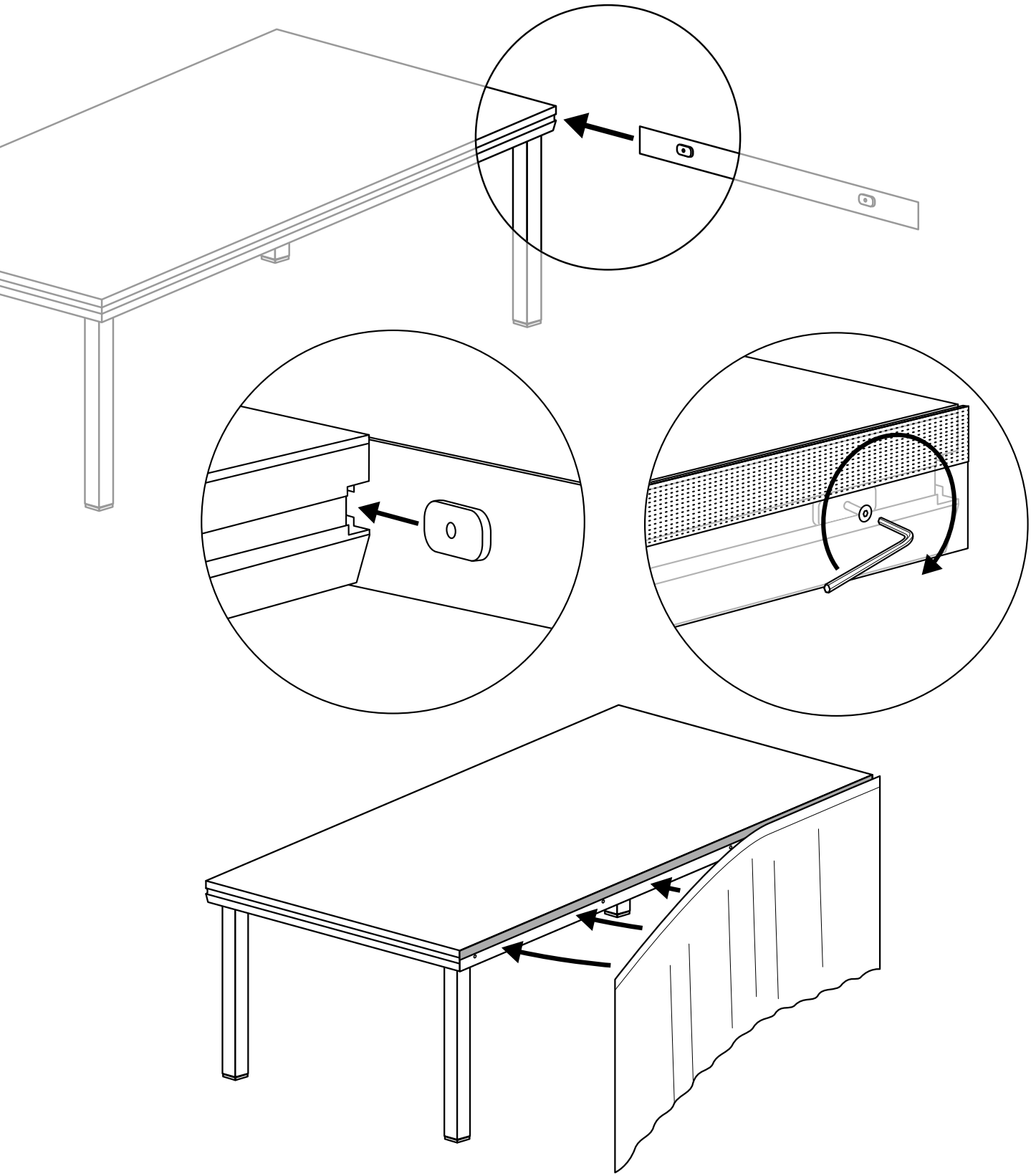

everdeck STAGING

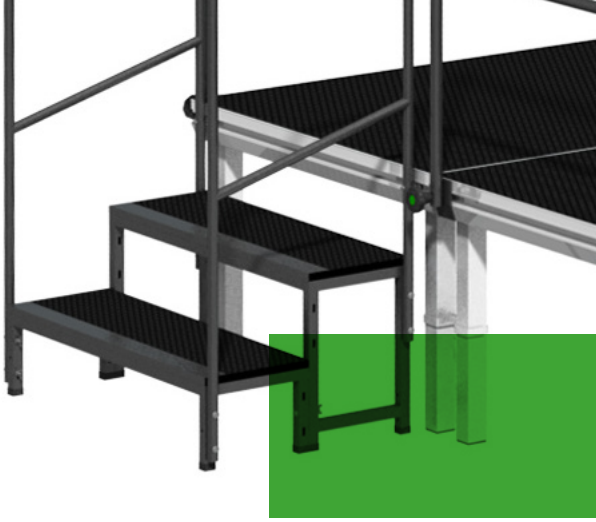

MODULAR STAIRS

Install the steps modular according to the below diagram, using the supplied screws and accessories.

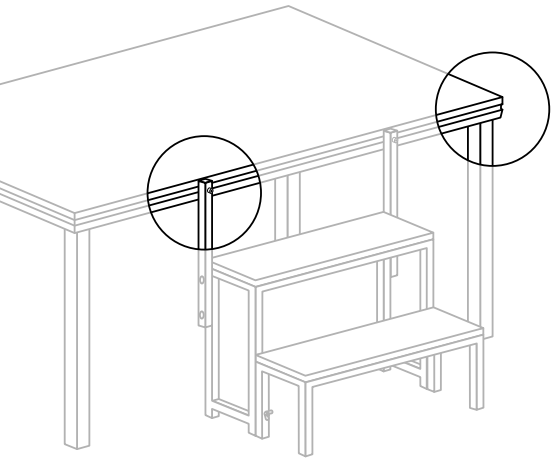

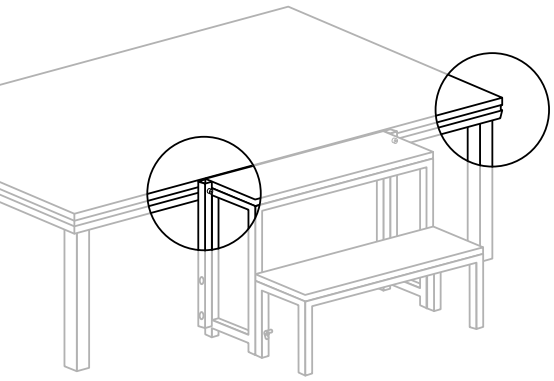

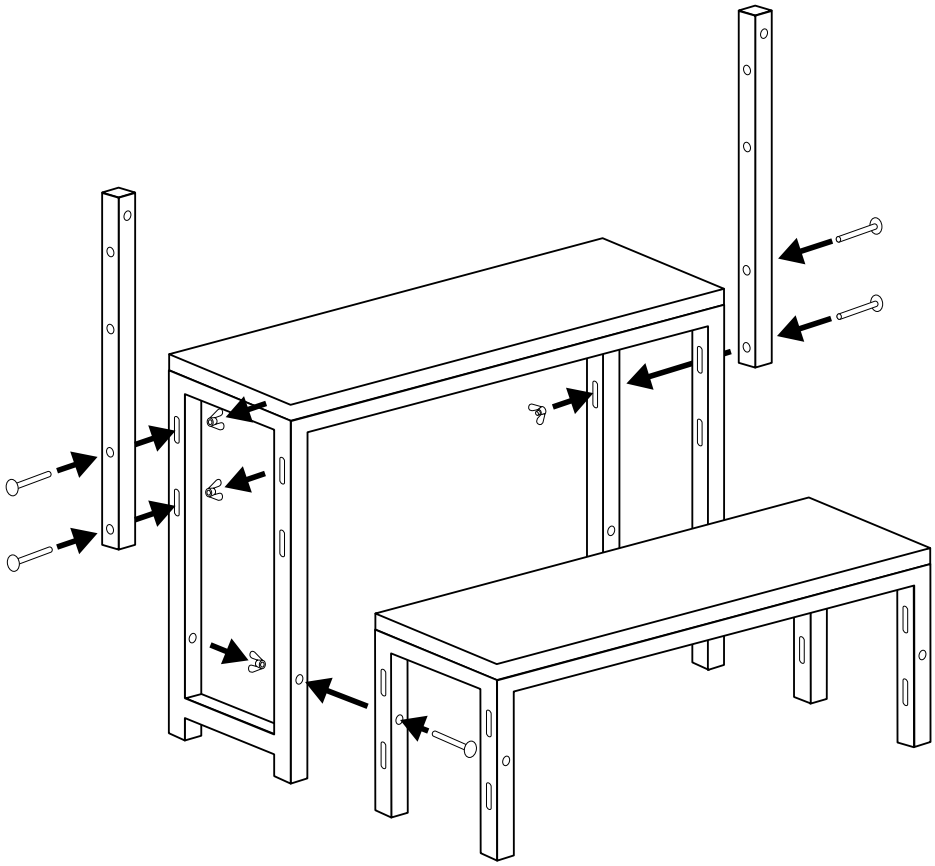

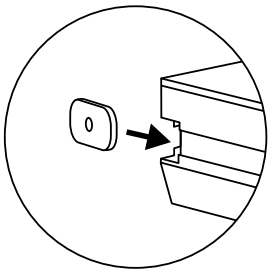

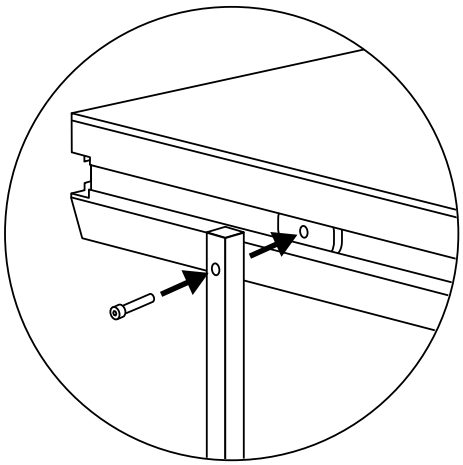

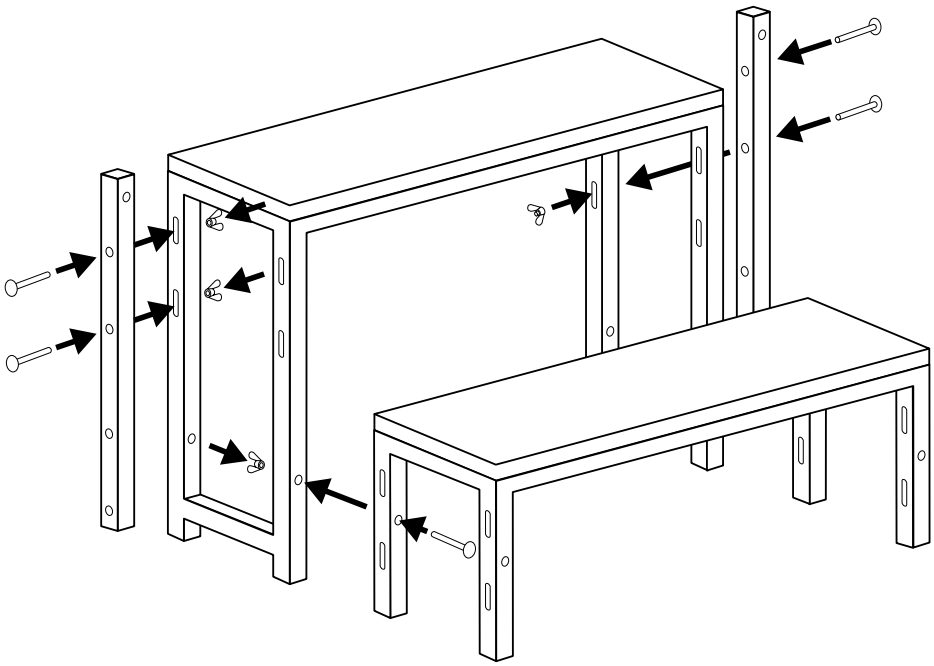

everdeck STAGING

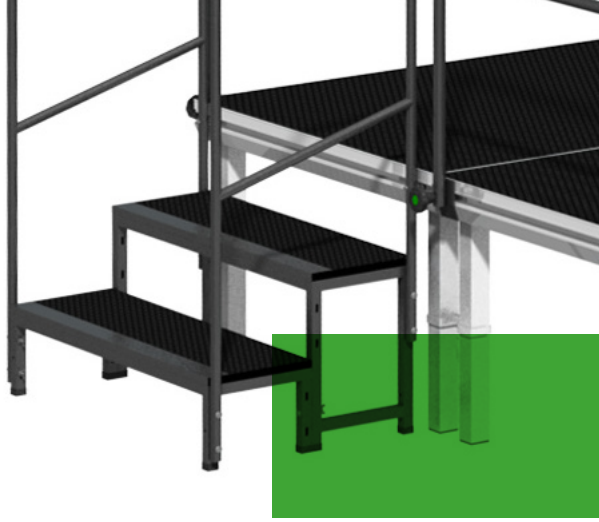

MODULAR STAIR HANDRAIL

Install the modular stair handrail to the modular steps and connect with the stage deck as shown on the below diagram.

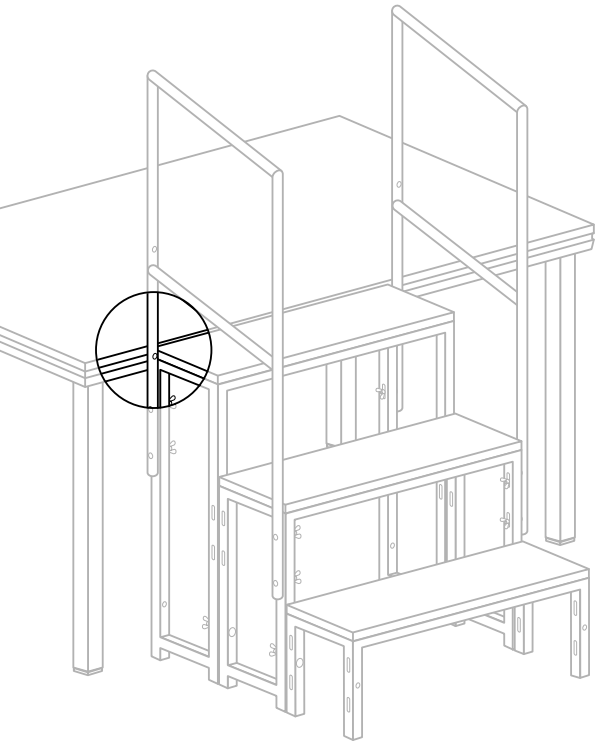

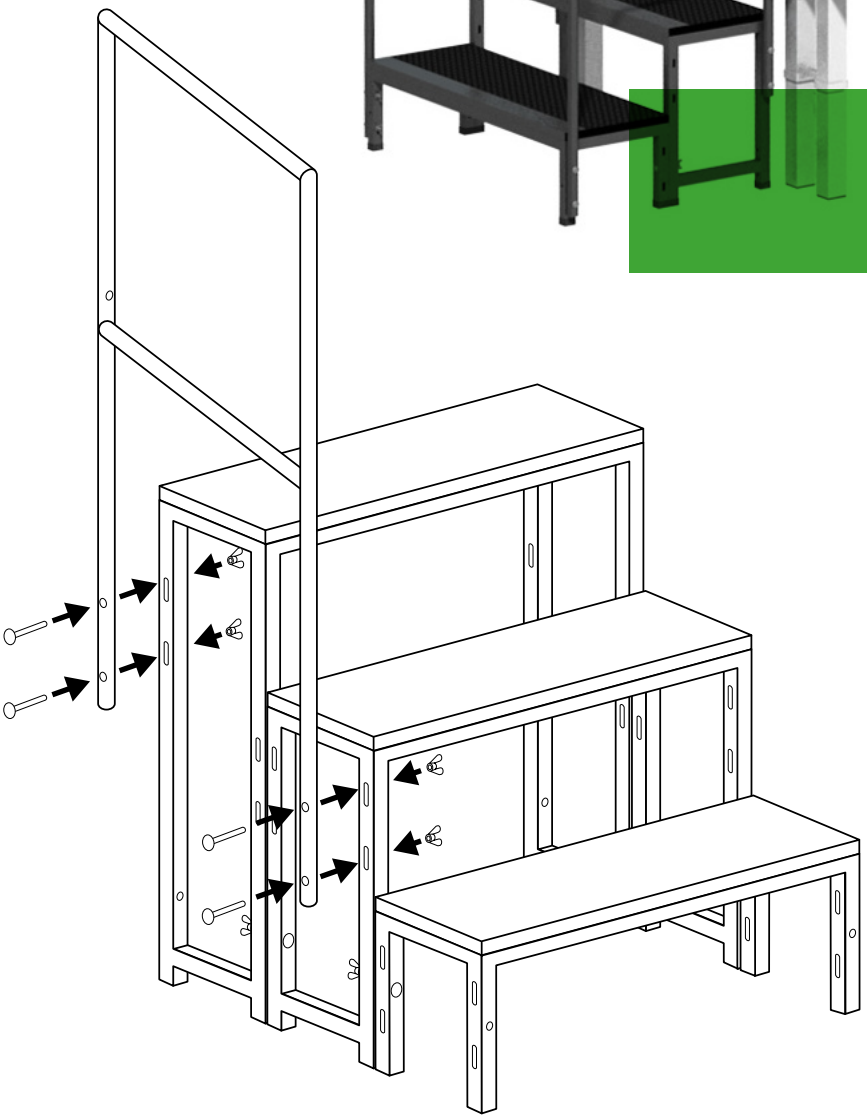

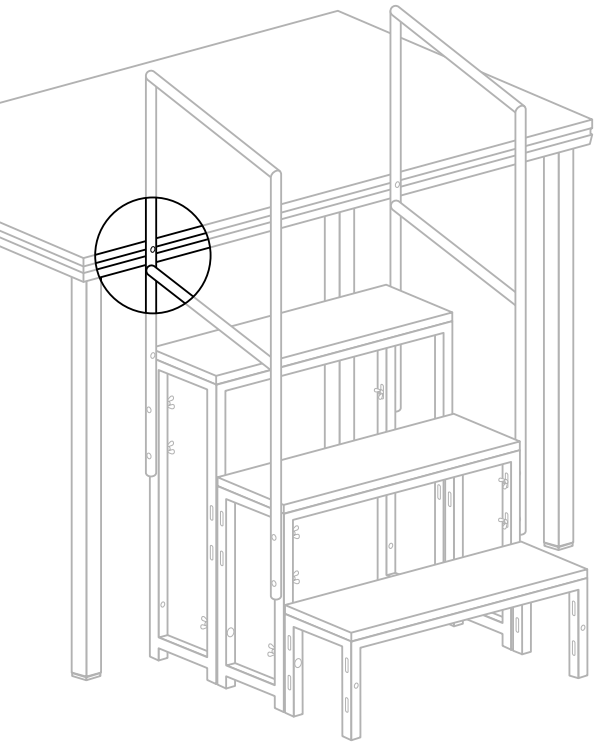

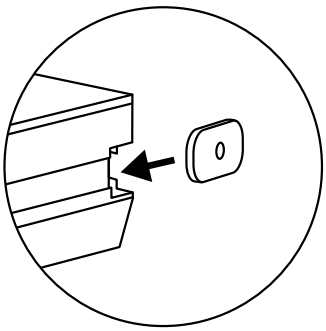

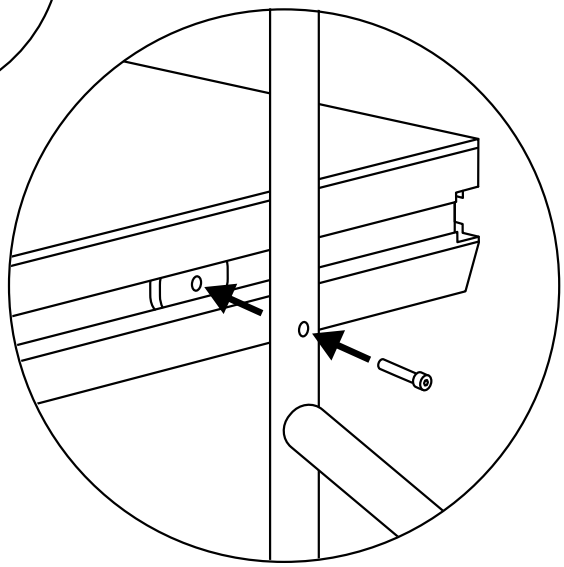

everdeck STAGING

ADJUSTABLE STAIRS

1. Attach the adjustable stairs to the stage deck and fasten it with all 4 screws to the assembly inserwts.
2. After leveling the stage steps fasten all screws on the side profiles of the adjustable stair.

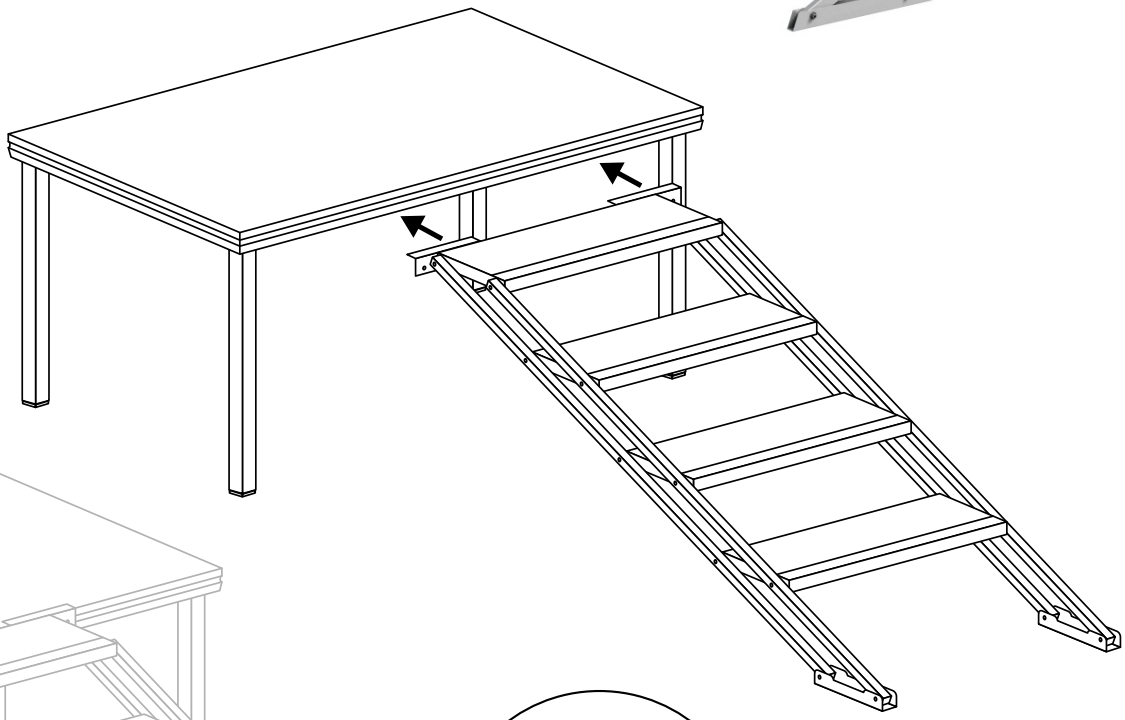

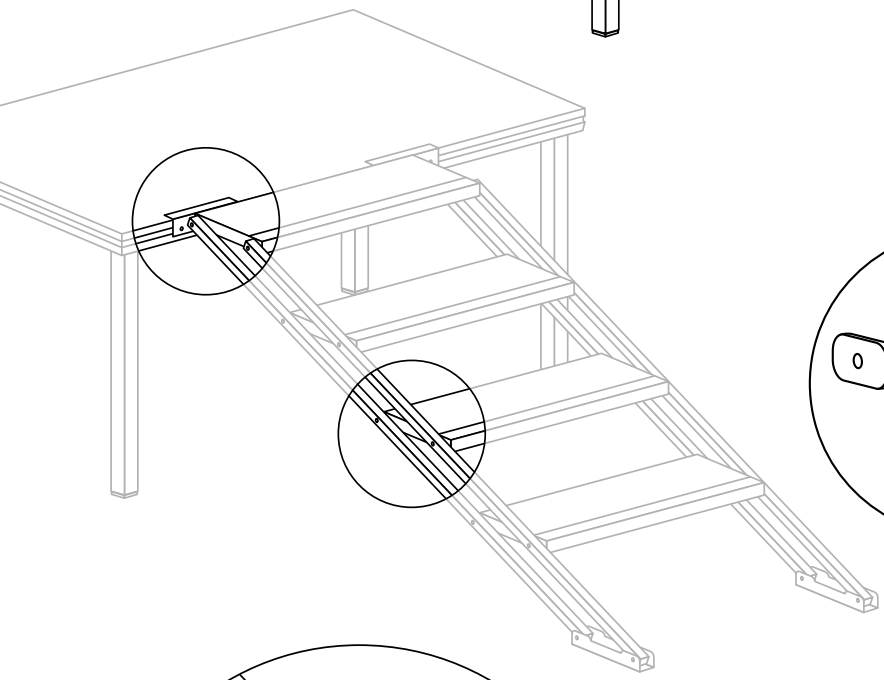

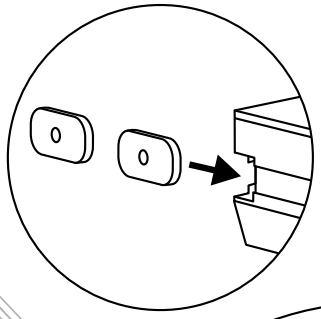

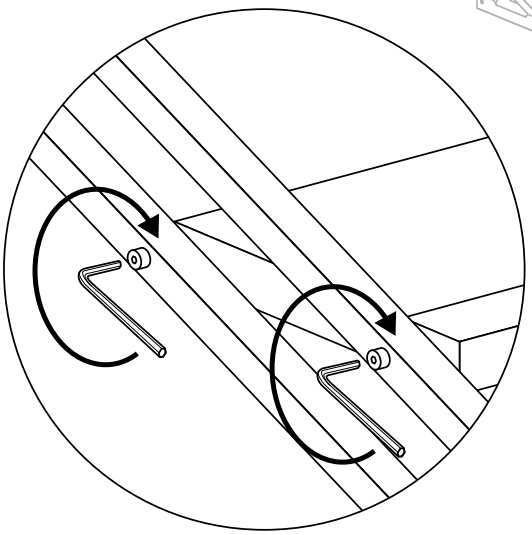

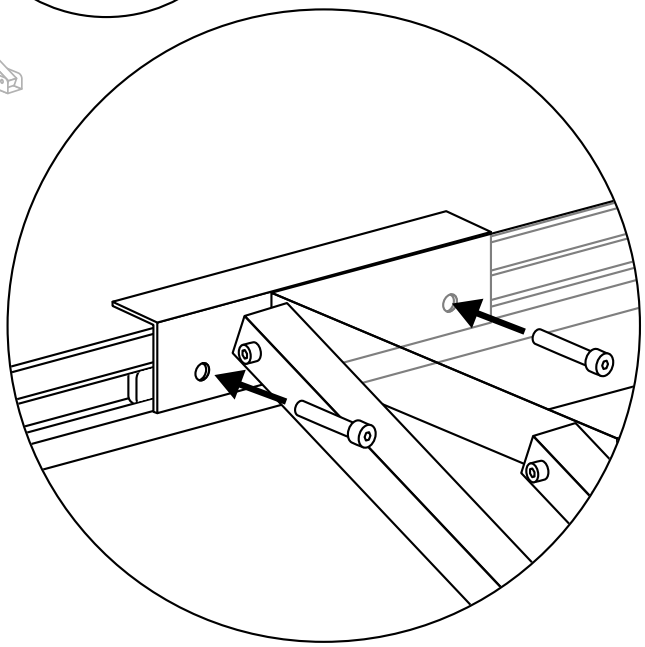

everdeck STAGING

ADJUSTABLE STAIRS HANDRAIL

Install the adjustable stairs handrail to the stairs as shown on below diagram using the supplied screws and accessories.

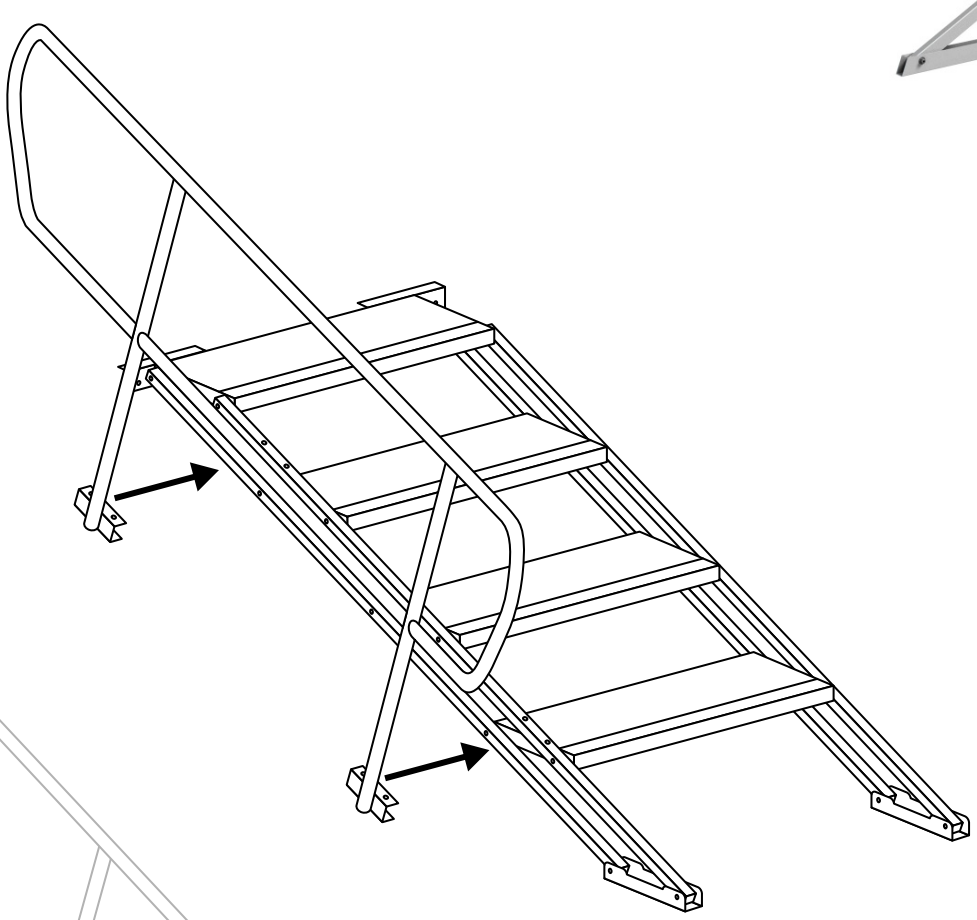

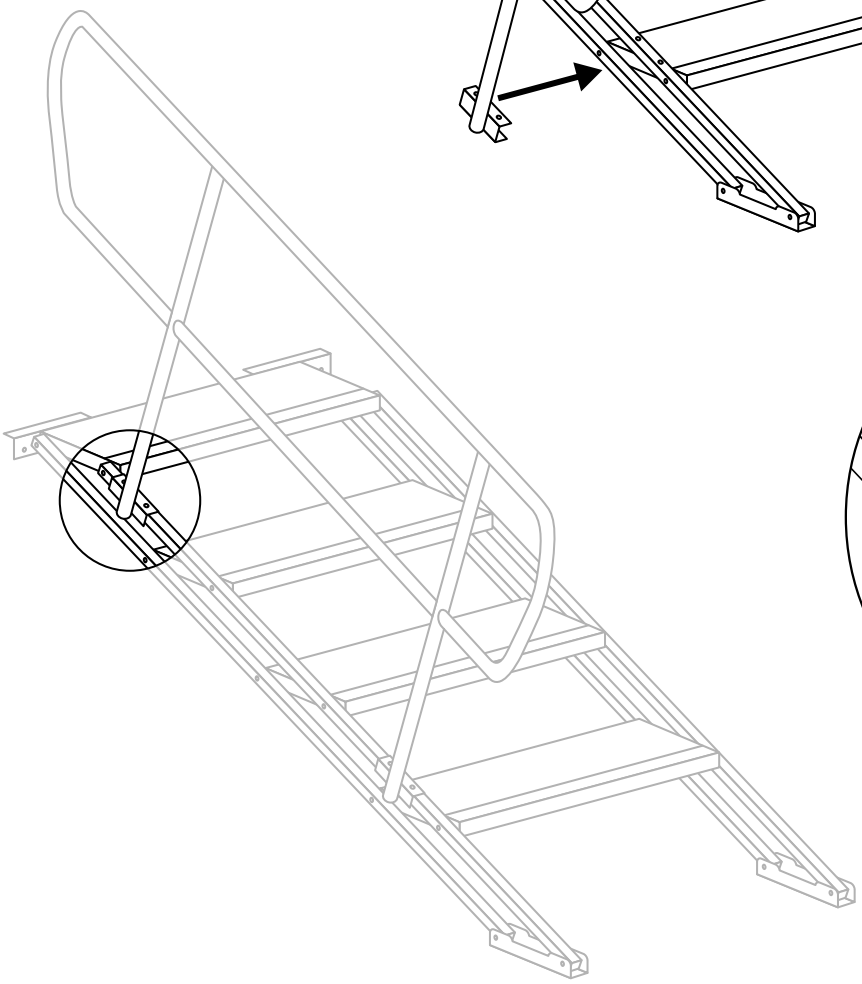

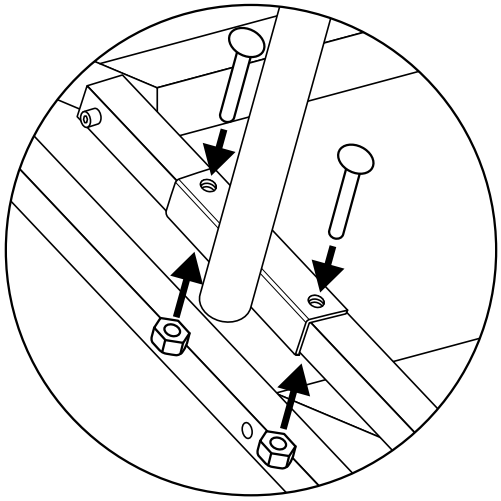

everdeck STAGING

HANDRAILS

Install railings according to the above diagram, using the supplied screws and accessories and handrail correction (straight or corner).

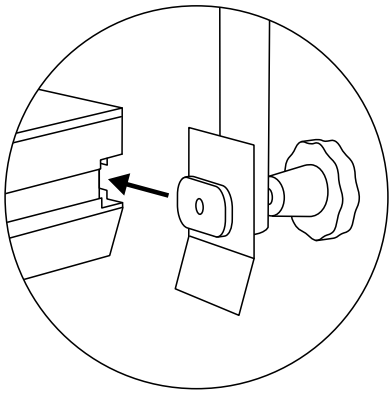

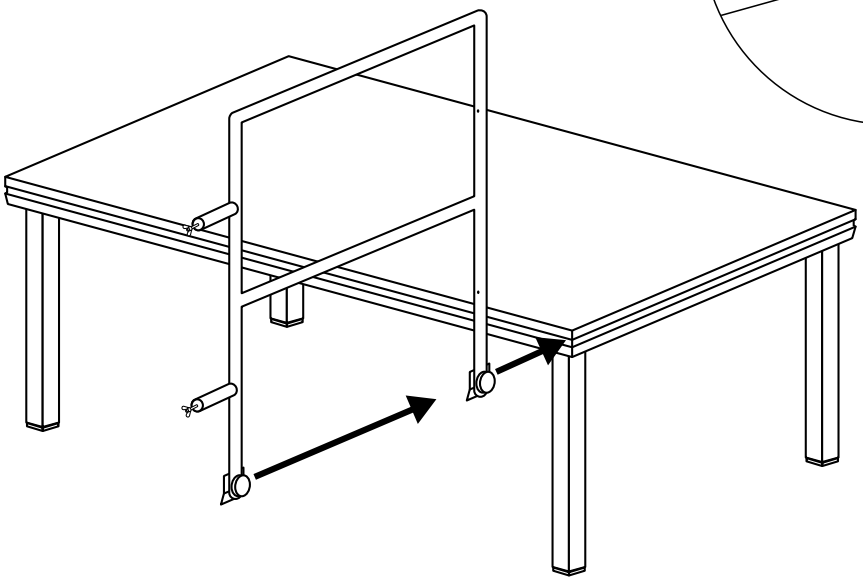

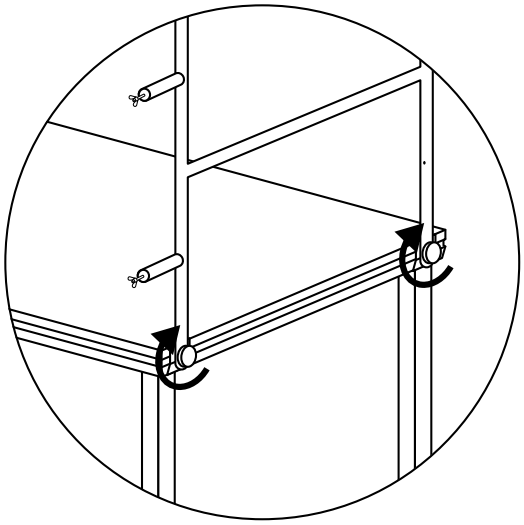

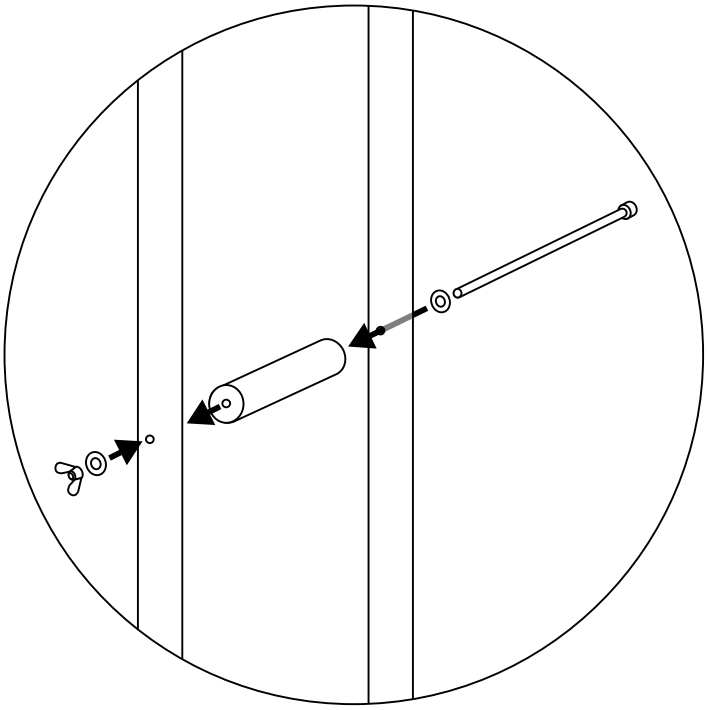

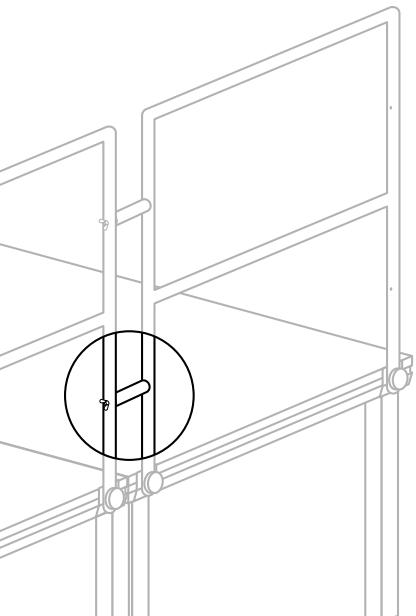

everdeck STAGING

HANDRAILS CORNER CONNECTION

Connect the handrails on the corner with a handrail corner connection as shown on the below diagram.

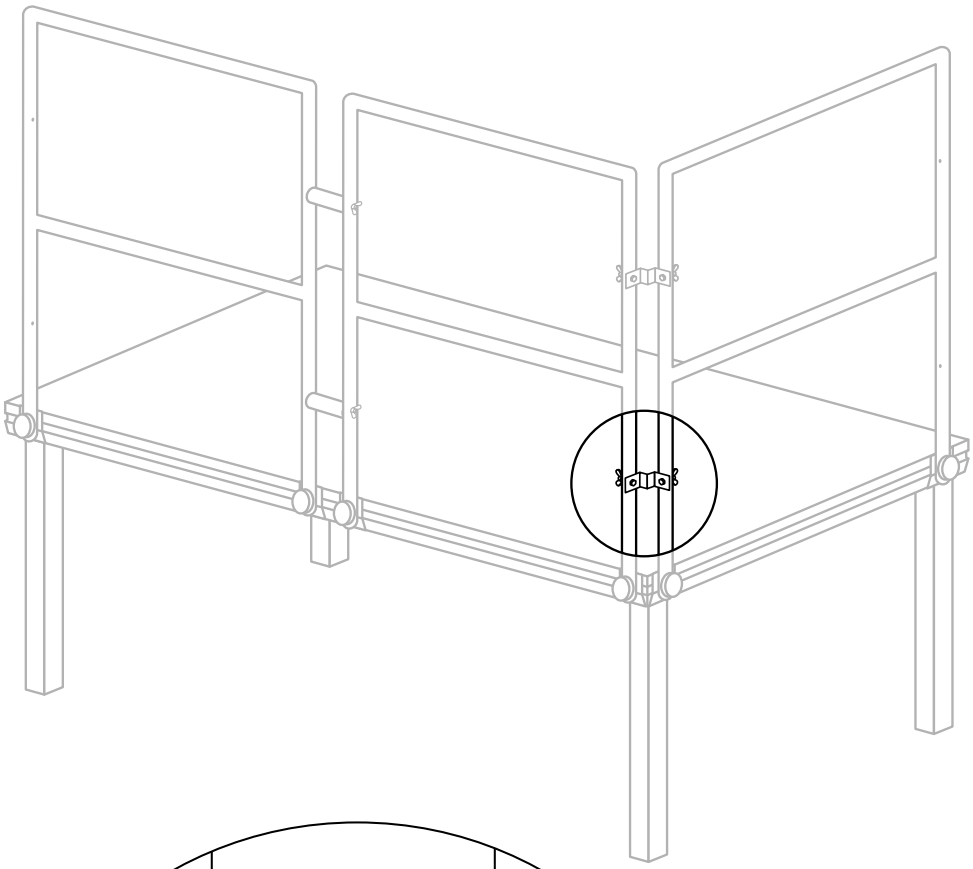

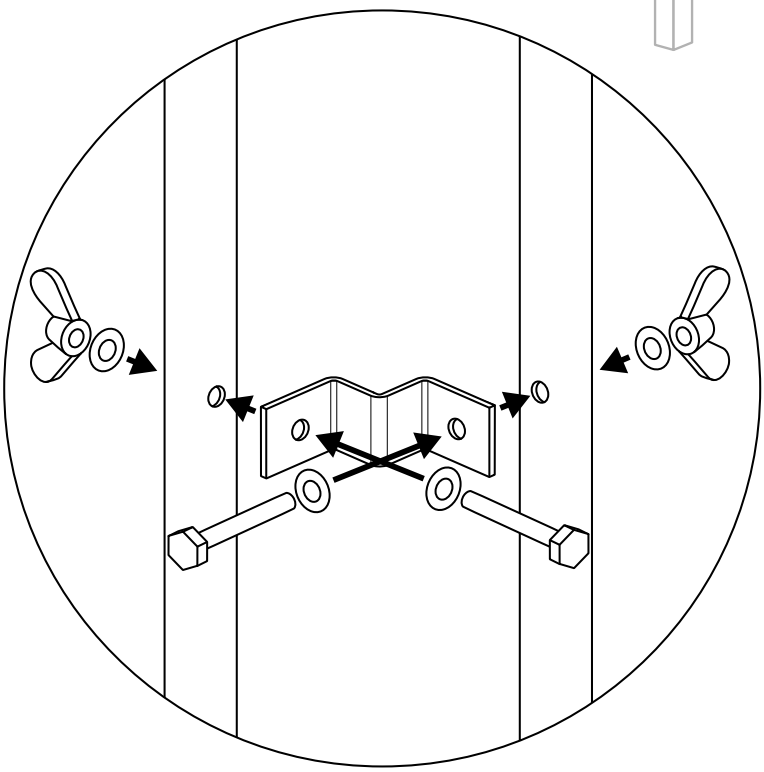

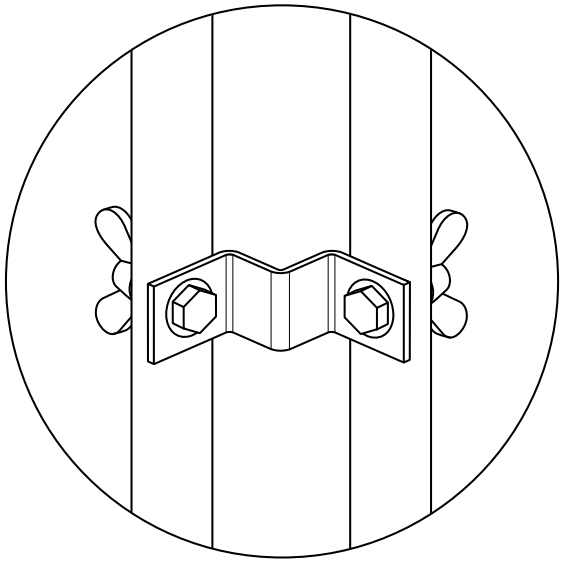

TRANSPORT AND STORAGE

Transport all components on pallets, dollies or flight case when moving from one location to another. Store all components in such way that they are free of dust and environmental influences.

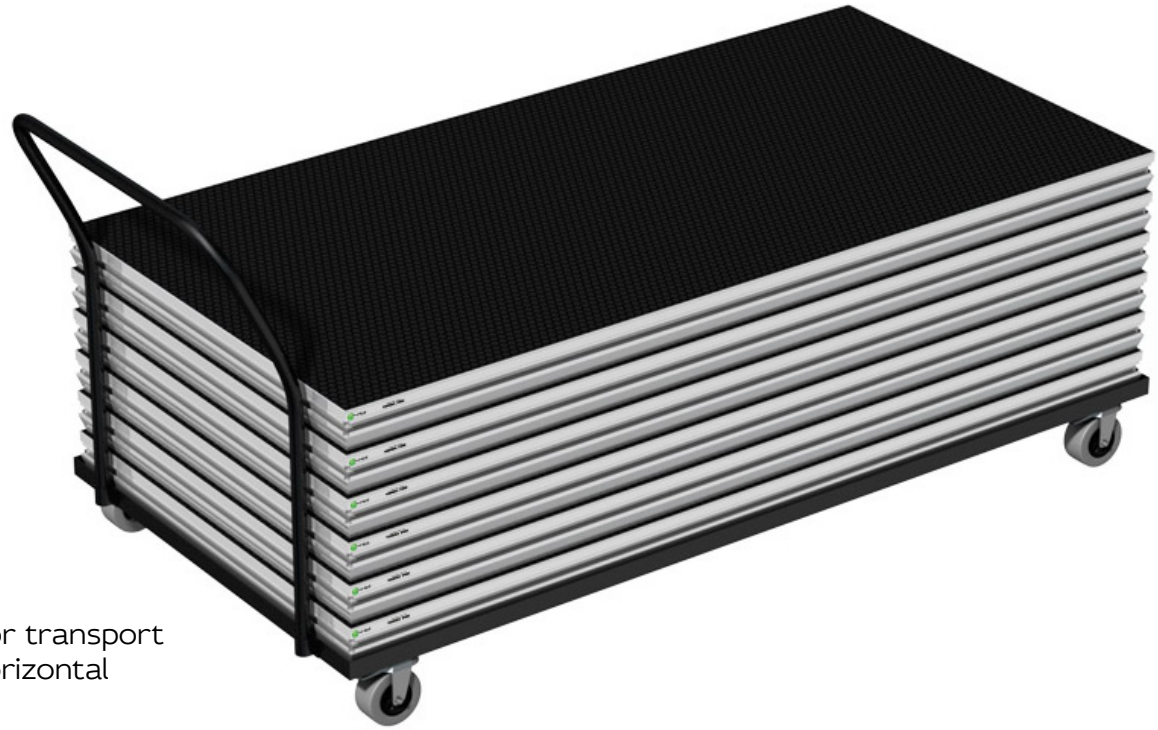

1. Deck trolley - for transport and storage in horizontal position.

2. Deck trolley - for transport and storage in vertical position.

3. Handrail trolley

MAINTENANCE

Keep the system free from dust,

Use warm water to clean all the parts, avoid cleaning materials and chemical fluids.

IMPORTANT

If you are not sure how to properly fit the different components of contact with Everdeck.

VERSA 750 stage deck

EVERDECK s.c.
ul. Kluczborska 13 B
46-243 Bogacica
Poland

e-mail: info@everdeck-staging.com
phone: +48 795 426 103
phone: +48 668 897 881

everdeck
STAGING