ETX Powered Loudspeaker Accessories

ETX-BRKT10, ETX-BRKT12, ETX-BRKT15, ETX-TCA-S, ETX-TCA-L, and ETX-BRKT35

en | Installation Guide

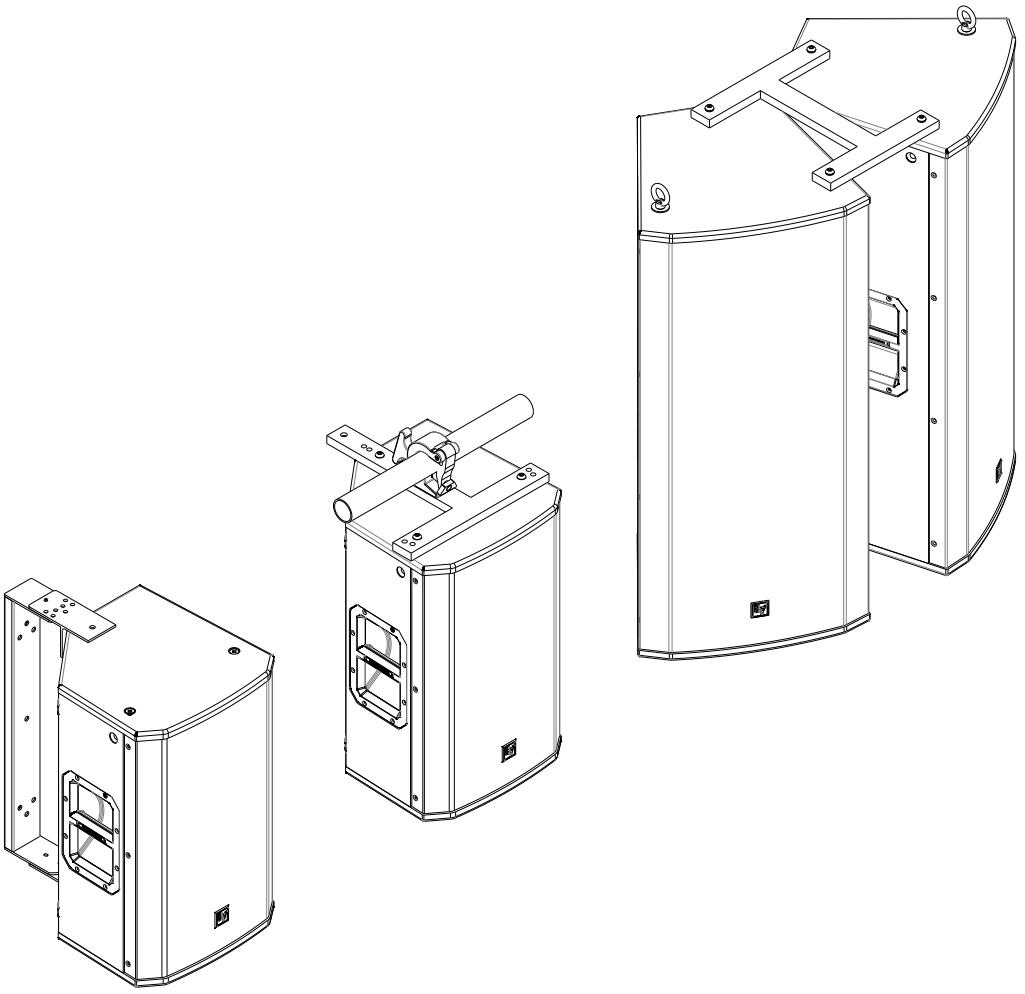

Electro-Voice

Table of contents

1	**Safety**	**4**
2	**Installation**	**6**
2.1	Wall mount bracket	6
2.2	Truss adapter	11
2.3	Array bracket	17
3	**Technical data**	**23**

1 Safety

The ETX Powered Loudspeaker systems and rigging accessories in this manual have a minimum structural safety factor of 8:1 when used as intended. The safety factor is defined as the ratio of the ultimate-break strength divided by the working-load limit. The ultimate-break strength represents the force at which a part will structurally fail. The working-load limit is the maximum load that the user shall apply. The safety factor provides a margin of safety above the working-load limit to accommodate normal dynamic loading and normal wear.

When ETX Powered Loudspeaker systems are suspended using the ETX Powered Loudspeaker rigging accessories as illustrated in this manual, the resulting forces loads will be within the working-load limits of both the loudspeaker systems and the rigging accessories, and a safety factor of at least 8:1 will be maintained. The use of rigging configurations other than recommended by Electro-Voice in this manual for either the ETX Powered Loudspeaker or ETX Powered Loudspeaker rigging accessories are at the risk of the user.

Warning!

Suspending any object is potentially dangerous and should only be attempted by individuals who have a thorough knowledge of the techniques and regulations of suspending objects overhead. Electro-Voice strongly recommends all loudspeakers be suspended taking into account all current national, federal, state, and local laws and regulations. It is the responsibility of the installer to ensure all loudspeakers are safely installed in accordance with all such requirements. When loudspeakers are suspended, Electro-Voice strongly recommends the system be inspected at least once per year or as laws and regulations require. If any sign of weakness or damage is detected, remedial action should be taken immediately. The user is responsible for making sure the wall, ceiling, or structure is capable of supporting all objects suspended overhead. Any hardware used to suspend a loudspeaker not associated with Electro-Voice is the responsibility of others.

Prior to use, inspect the suspension points and associated hardware for any cracks, deformations, broken welds, corrosion, missing or damaged components which could reduce the suspension points strength. Replace any damaged hardware. Never exceed the limitations or maximum recommended load intended for the suspension points. As an added safety measure, it is suggested the user install an extra suspension point back to the building structural supports. This redundant safety point should have as little slack as possible (less than one (1) inch is preferable). Prior to each use, inspect the loudspeaker enclosures for any cracks, deformations, missing or damaged components, which could reduce enclosure strength. Replace any loudspeaker systems damaged or missing hardware.

Warning!

Eyebolts must be fully seated and oriented in the plane of pull. Always use fender washers at least 1.5 inch in diameter and 1/16 inch thick under the eyebolt to distribute the load on the enclosure.

REFERENCE: For more information, see ETX Powered Loudspeakers User Manual (F.01U.276.083).

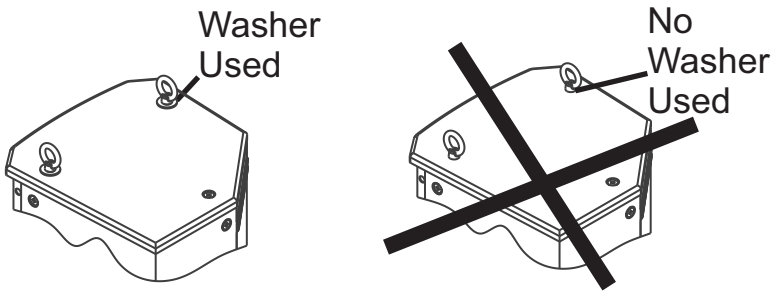

Figure 1.1: Eyebolt shown with and without washer

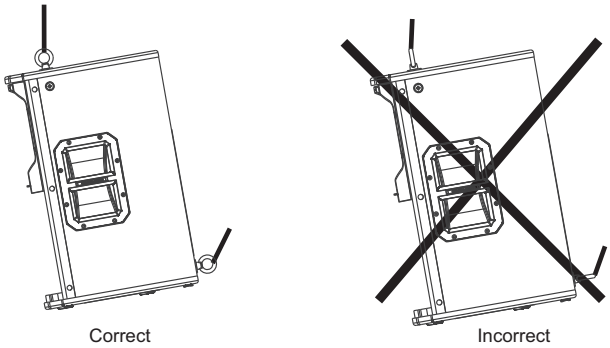

Figure 1.2: Eyebolts shown oriented in the plane of pull

Warning!
Never exceed the limitations or maximum recommended working load for Electro-Voice loudspeakers.
Disregarding this warning could result in serious injury or death.

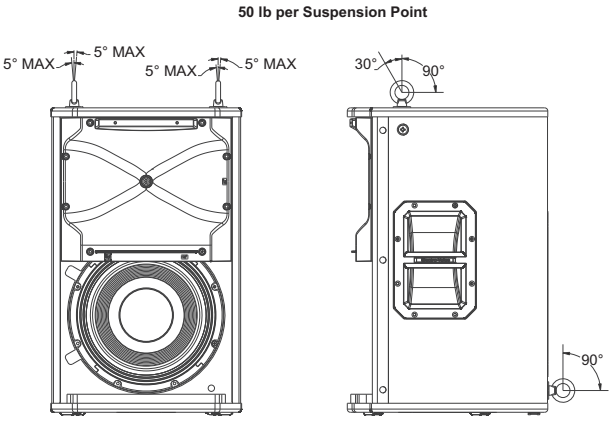

Figure 1.3: Maximum working load - vertical orientation

Warning!
Never suspend ETX Powered Loudspeakers in a vertical column array.
Disregarding this warning could result in serious injury or death.

Notice!
If the eyebolts are removed reinstall the screws.
If the screws are not reinstalled air leaks occur in the enclosure, resulting in undesirable performance.

2 Installation

Thank you for choosing an ETX Powered Loudspeaker accessory. This installation guide describes how to install the wall mount brackets, truss adapters, and array bracket used with ETX Powered Loudspeaker systems.

ETX Powered Loudspeakers Accessory Guide

Loudspeaker	Wall Mount Bracket	Truss Adapter	Array Bracket	M10 Eyebolt Kit
ETX-10P	ETX-BRKT10	ETX-TCA-S	NA	EBK-M10-3PACK
ETX-12P	ETX-BRKT12	ETX-TCA-L	NA	EBK-M10-3PACK
ETX-15P	ETX-BRKT15	ETX-TCA-L	NA	EBK-M10-3PACK
ETX-35P	NA	ETX-TCA-L	ETX-BRKT35	EBK-M10-3PACK

For more information, see EBK-M10 Eyebolt Attachment Kit Installation Instructions (F.01U.303.870).

2.1 Wall mount bracket

The wall mount bracket is used to mount an ETX-10P, ETX-12P, or ETX-15P loudspeaker to the wall.

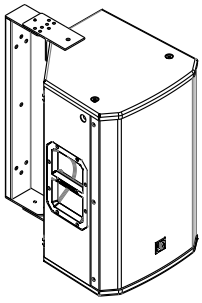

The wall mount bracket kit contains the following:

Quantity:	Description:
1	ETX Powered Loudspeakers Accessories Installation Guide
1	Allen Wrench
4	M10 Split Lock Washers
4	M10 Flat Washers
4	M10 Button Head Screws
2	M8 Socket Head Cap Screws
1	T-Bracket
1	T-Bracket with hook
1	U-Bracket

Table 2.1: Wall mount kit components

Attaching the T-Brackets

The ETX-12P loudspeaker is shown in the illustrations. Use the correct size wall mount bracket kit designed for your ETX-10P, ETX-12P, or ETX-15P loudspeaker. For more information, see *ETX Powered Loudspeakers Accessory Guide, page 6*.

To **attach the T-Brackets to ETX-10P, ETX-12P, or ETX-15P loudspeaker**, do the following:

1. Using an Allen wrench (supplied), remove the **four (4) rear suspension point M10 screws from the loudspeaker**.

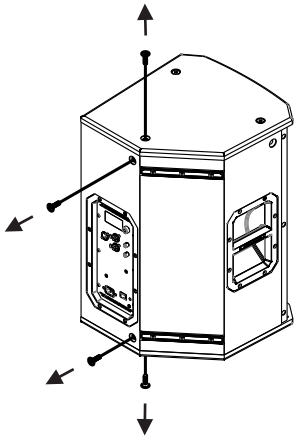

Figure 2.1: Removing screws

2. Align the **T-Bracket with the holes on the top and rear of the loudspeaker (Vertical)**.
   OR
   Align the **T-Bracket with the holes on the right and rear of the loudspeaker (Horizontal)**.

Notice!

When mounting a loudspeaker horizontally, the T-Bracket with hook needs to be installed on the left side as you face the front of the loudspeaker.

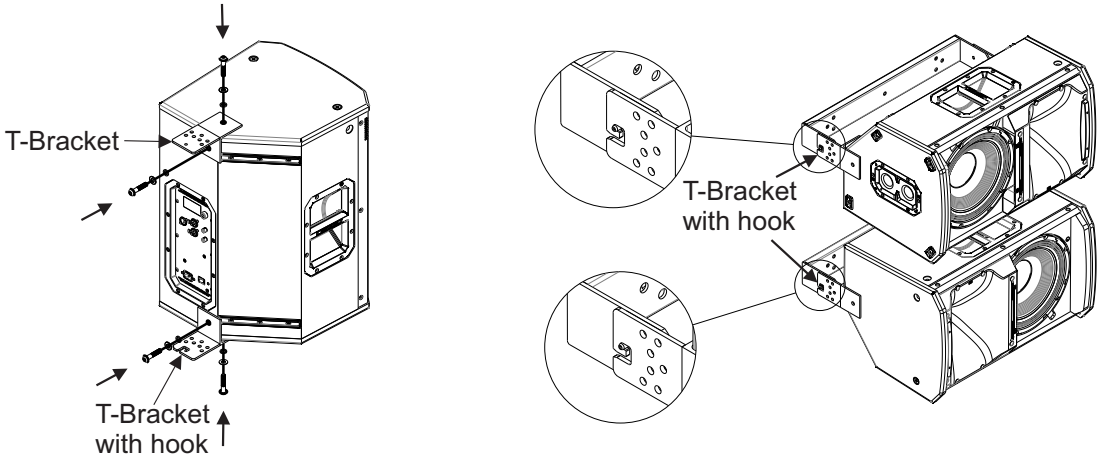

Figure 2.2: T-Brackets Vertical (left) Horizontal (right)

3. Insert **two (2) of the M10 button head screws, two (2) M10 flat washers,** and **two (2) M10 split lock washers (supplied)**.
4. Tighten the **two (2) M10 button head screws**.
   The T-bracket is secured to the loudspeaker.

5. Align the **T-Bracket with hook with the holes on the bottom and rear of the loudspeaker (Vertical)**.
   OR
   Align the **T-Bracket with hook with the holes on the left and rear of the loudspeaker (Horizontal)**.

Notice!
When mounting a loudspeaker horizontally, the T-Bracket with the hook needs to be installed on the left side as you face the front of the loudspeaker.

6. Insert **two (2) of the M10 button head screws, two (2) M10 flat washers,** and **two (2) M10 split lock washers (supplied)**.
7. Tighten the **two (2) M10 button head screws**.
   The T-bracket with hook is secured to the loudspeaker.

Mounting U-Bracket to the wall
The wall mount U-Bracket is used to mount a loudspeaker to the wall.

Caution!
Due to the weight of the Electro-Voice loudspeaker system, it is imperative the bracket is properly secured to the wall. The choice of fastener (not supplied) will be determined by the material and construction of the mounting surface. The user is responsible to ensure the mounting surface and fasteners are capable of supporting the weight of the loudspeaker.

Caution!
Two (2) person lift and placement is recommended for the heavier loudspeakers. Single person lift and placement of heavier loudspeakers could cause injury.

Notice!
The wall U-Bracket mounting holes accept M10 or 3/8-inch fasteners. The horizontal holes are located 16-inches apart for attachment to studs.

To **wall mount an ETX-10P, ETX-12P, or ETX-15P**, do the following:

1. Using the fasteners suitable for the wall material (not supplied), attach the **U-Bracket to the wall in a vertical or horizontal position**.

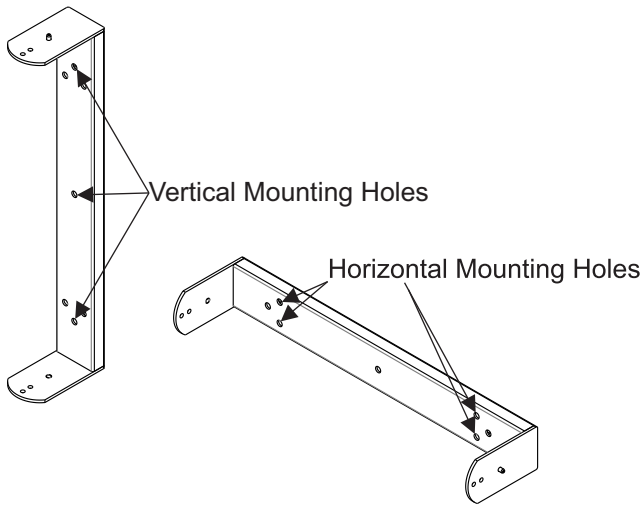

Figure 2.3: U-Bracket

2. Using two (2) hands lift the **loudspeaker**.
3. Place the **T-Bracket onto the pivot pin on top of the U-Bracket**.

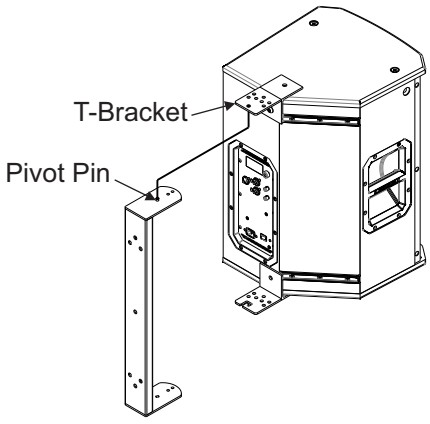

Figure 2.4: U-Bracket onto pivot pin

4. Ensuring the lower U-Bracket pivot pin is securely placed in the notch; **guide the T-Bracket with hook into position**.
   The loudspeaker is loosely hung and allows you to position the loudspeaker.

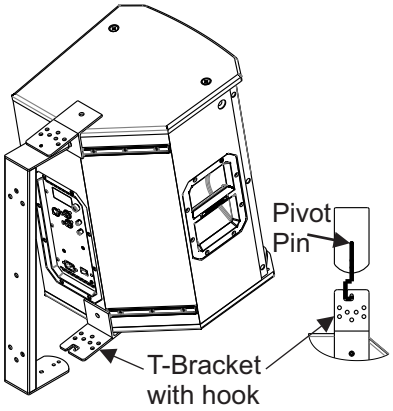

Figure 2.5: Guide onto U-Bracket

5. Position the **loudspeaker to the desired angle**.

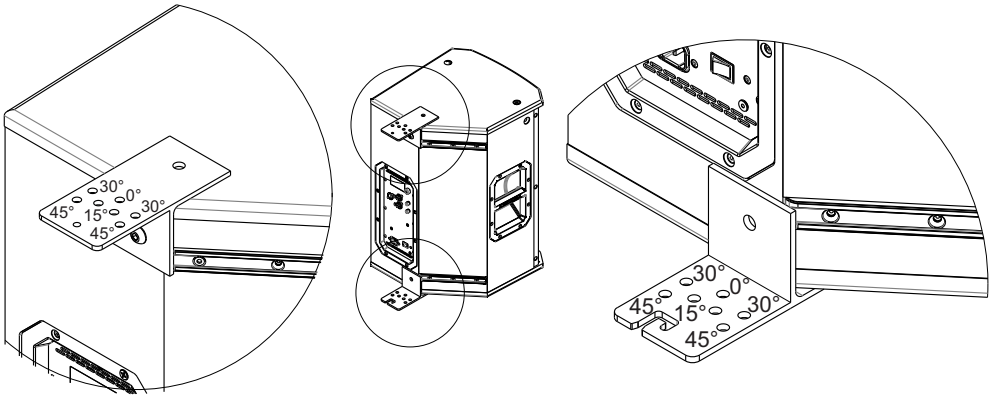

Figure 2.6: Angle degrees

6. Insert **one (1) M8 socket head cap screw (supplied) into each T-Bracket at the desired angle**.

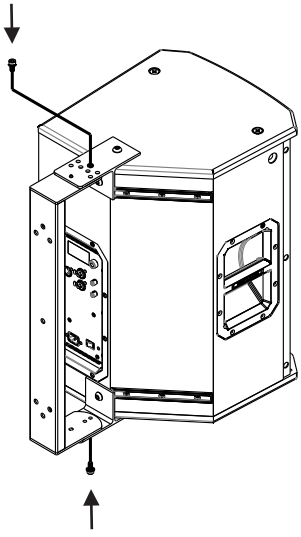

Figure 2.7: Secure loudspeaker

7. Tighten the **two (2) M8 socket head cap screws (supplied) sufficiently so the loudspeaker does not rotate**.

2.2 Truss adapter

The truss adapter is used to suspend an ETX-10P, ETX-12P, ETX-15P, or ETX-35P loudspeaker on 1.5-inch to 2-inch truss tubing.

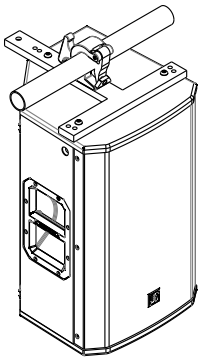

The truss adaptor kits contain the following:

Quantity:	Description:
1	ETX Powered Loudspeakers Accessories Installation Guide
1	HEX L-KEY, 6MM, Long Arm
3	M10 Split Lock Washers
3	M10 Button Head Screws
1	Truss Clamp (with bolt and washer attached)
1	Short Bracket (ETX-10P) OR Long Bracket (ETX-12P, ETX-15P, and ETX-35P)
1	M10 Fender Washer
1	M10 Forged Steel Shoulder Eyebolt

Table 2.2: Truss adapter kit components

Vertical adjustment of the truss clamp

The vertical adjustment allows the loudspeaker to be suspended at a natural down angle to achieve the desired coverage. If the down angle required is in between the vertical adjustment locations, use the smaller vertical adjustment location and a pull-back eyebolt. For more information, see *Suspending the truss adapter, page 15*.

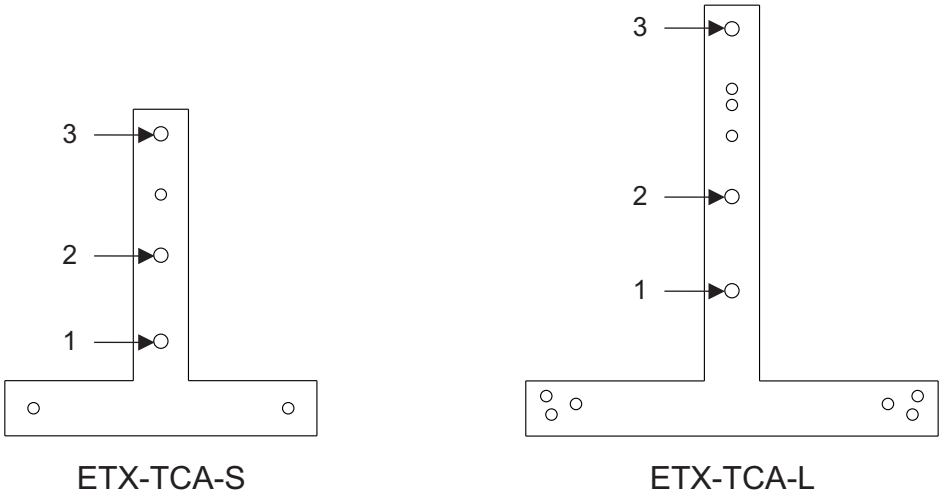

Figure 2.8: Vertical adjustment

Vertical Adjustment	ETX-10P (ETX-TCA-S)	ETX-12P (ETX-TCA-L)	ETX-15P (ETX-TCA-L)	ETX-35P (ETX-TCA-L)
1	0°	0°	0°	0°
2	14° down	15° down	11° down	8° down
3	30° down	33° down	30° down	22° down

Table 2.3: Approximate natural down angle reference

Attaching the truss clamp to the bracket

The truss clamp illustration shows vertical adjustment 1. For more information, see *Vertical adjustment of the truss clamp, page 12*.

To **attach the truss clamp to the bracket**, do the following:

1. Remove the **bolt** and **washer (supplied) from the truss clamp**.
   Save the bolt and washer.

2. Align the **truss clamp (A) with the desired vertical adjustment**.

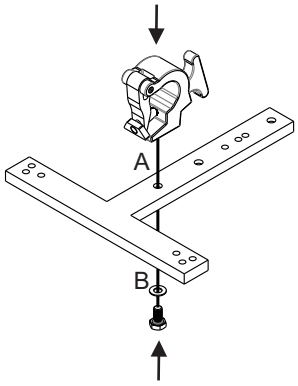

Figure 2.9: Truss clamp and bracket

3. Insert the **bolt** and **washer (B) through the truss bracket into the truss clamp**.
   Use the bolt and washer removed from step 1.
4. Tighten the **bolt (B)**.
   The truss clamp is secured to the bracket.

Attaching the truss adapter

Use the correct size truss adapter designed for your ETX-10P, ETX-12P, ETX-15P, or ETX-35P loudspeaker. The ETX-12P loudspeaker is shown in the illustrations with the truss adapter in vertical adjustment 1. For more information, see *ETX Powered Loudspeakers Accessory Guide, page 6* and *Vertical adjustment of the truss clamp, page 12*.

To **attach the truss adaptor to the ETX-10P, ETX-12P, ETX-15P, or ETX-35P loudspeaker**, do the following:

1. Using the L-Key (supplied), remove **three (3) M10 screws from the top of the loudspeaker**.

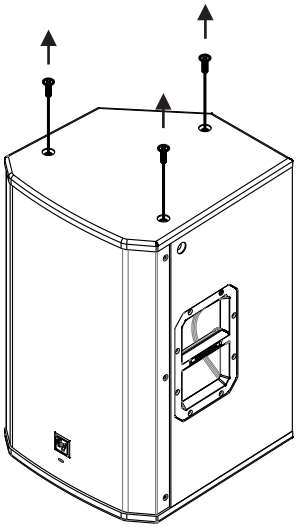

Figure 2.10: Removing screws

2. Align the **holes on the bracket fitting the loudspeaker size**.

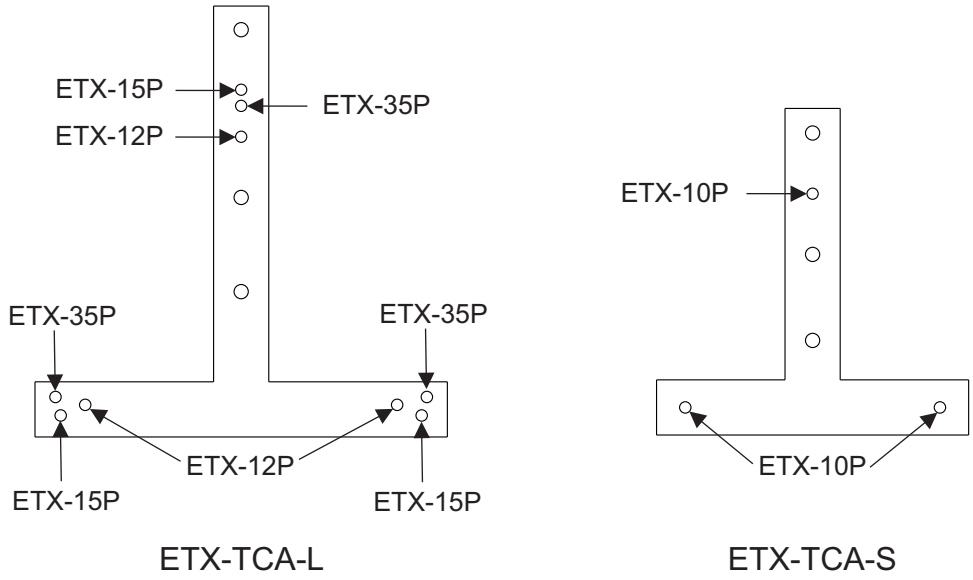

Figure 2.11: Truss adapters by loudspeaker size

3. Insert **three (3) M10 button head screws** and **three (3) M10 split lock washers (supplied)**.

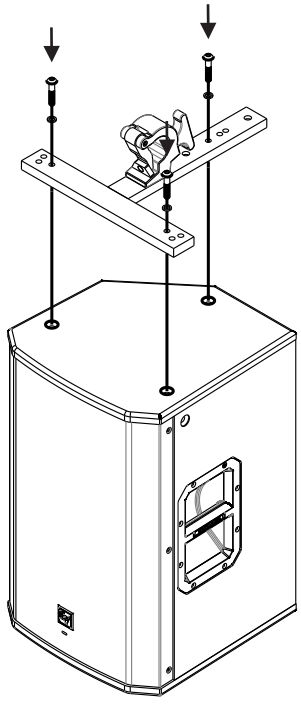

Figure 2.12: Attach truss adapter to loudspeaker

4. Tighten the **three (3) M10 button head screws (supplied)**.
   The truss adapter is secured to the top of the loudspeaker.

Suspending the truss adapter

Caution!
Two (2) person lift and placement is recommended for the heavier loudspeakers. Single person lift and placement of heavier loudspeakers could cause injury.

To **suspend the truss adapter**, do the following:

1. Remove the **M10 screw from the suspension point below the amplifier**.

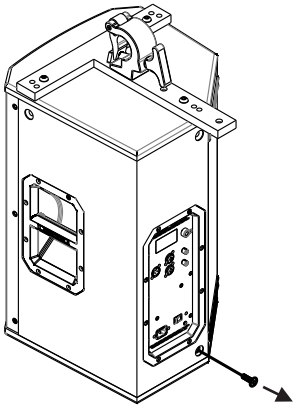

Figure 2.13: Remove suspension screw

2. Insert **one (1) eyebolt** and **one (1) fender washer (supplied)**.

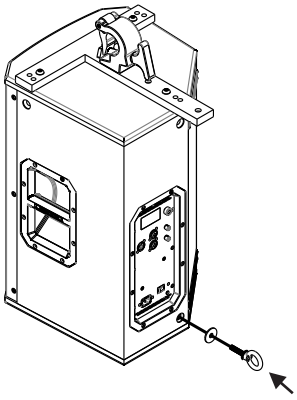

Figure 2.14: Attach eyebolt

3. Tighten the **eyebolt (supplied)**.
   The eyebolt is secured to the loudspeaker.
4. Using two (2) hands lift the **loudspeaker**.

5. Guide the **truss clamp onto the truss tubing**.

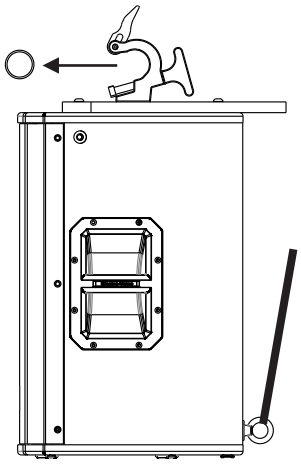

Figure 2.15: Guide truss clamp

6. Close the **truss clamp onto the truss tubing**.
   The truss adapter hangs securely from the truss tubing.

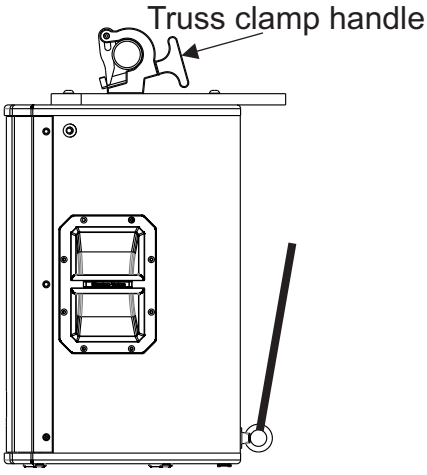

Figure 2.16: Close truss clamp

7. Set the **desired down angle**.
8. Tighten the **truss clamp handle**.

2.3 Array bracket

The array bracket is used to suspend two (2) ETX-35P loudspeakers in an array.

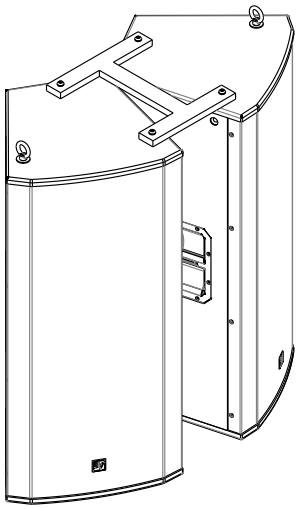

The array bracket kit contains the following:

Quantity	Description
1	ETX Powered Loudspeakers Accessories Installation Guide
1	HEX L-KEY, 6MM, Long Arm
6	M10 Split Lock Washers
6	M10 Button Head Screws
1	Bracket, Top
1	Bracket, Bottom
4	M10 Fender Washers
4	M10 Forged Steel Shoulder Eyebolts

Table 2.4: Array bracket kit components

Attaching the array bracket

To **attach the array bracket to the ETX-35P loudspeakers**, do the following:

1. Place **two (2) ETX-35P loudspeakers on the floor with the amplifiers facing you**.
2. Using the L-Key (supplied), remove the **two (2) inside suspension point M10 screws (A) from the top of both loudspeakers**.

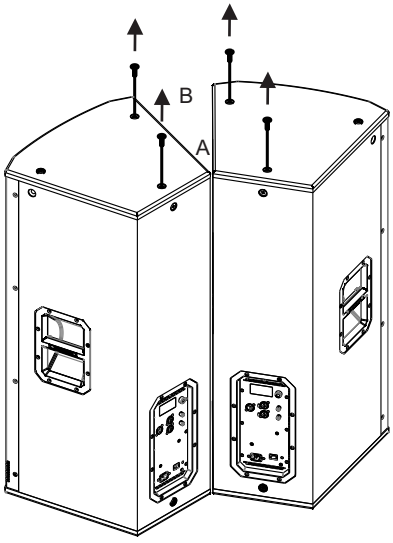

Figure 2.17: Remove screws

3. Remove the **two (2) back suspension point M10 screws (B) from the top of both loudspeakers**.
4. Align the **front of the top bracket with the inside suspension points**.
   The front of the top bracket is shorter than the back of the top bracket.

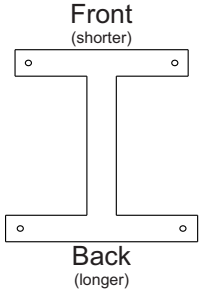

Figure 2.18: Align top bracket

5. Align the **back of the top bracket with the back suspension points**.
   The back of the top bracket is longer than the front of the top bracket.

6. Insert **four (4) of the M10 button head screws** and **four (4) M10 split lock washers (supplied) into the top bracket**.

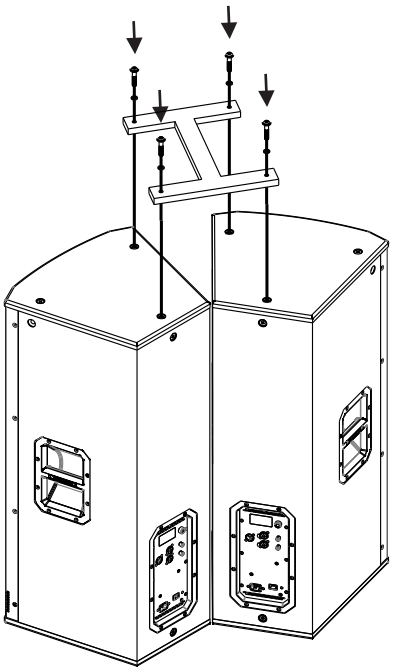

Figure 2.19: Attach bracket

7. Tighten **the four (4) M10 button head screws (supplied)**.
   The top bracket is secured to the loudspeakers.
8. Remove the **two (2) bottom suspension point M10 screws from the bottom of both loudspeakers**.

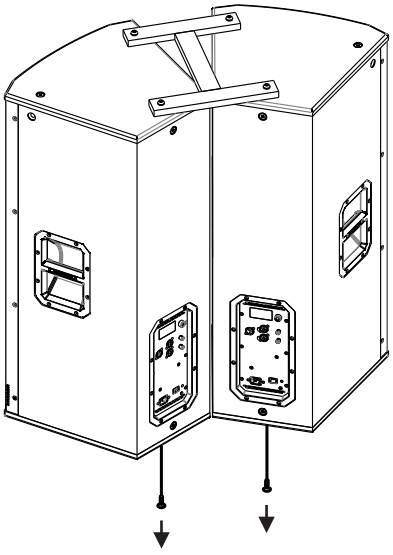

Figure 2.20: Remove bottom screws

9. Align the **bottom bracket with the bottom suspension points**.
   The notches in the bottom bracket are designed to fit around the rubber feet.

10. Insert **two (2) of the M10 button head screws and two (2) of the M10 split lock washers (supplied)**.

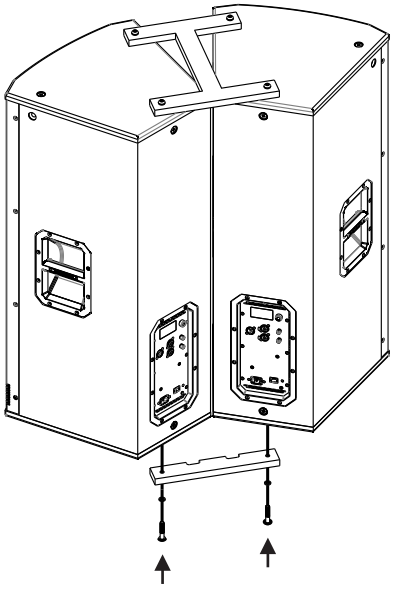

Figure 2.21: Attach bottom bracket

11. Tighten the **two (2) M10 button head screws (supplied)**.
    The bottom bracket is secured to the loudspeakers.

Attaching the eyebolts

The array can be suspended using the four (4) supplied M10 eyebolts and four (4) washers. If the desired down angle is between 0° and 45°, use the top front suspension points. If the desired down angle is between 45° and 90°, use the rear top suspension points.

Caution!

Always orient the eyebolts in the plane of pull. Any hardware used to suspend a loudspeaker not associated with Electro-Voice is the responsibilities of others.

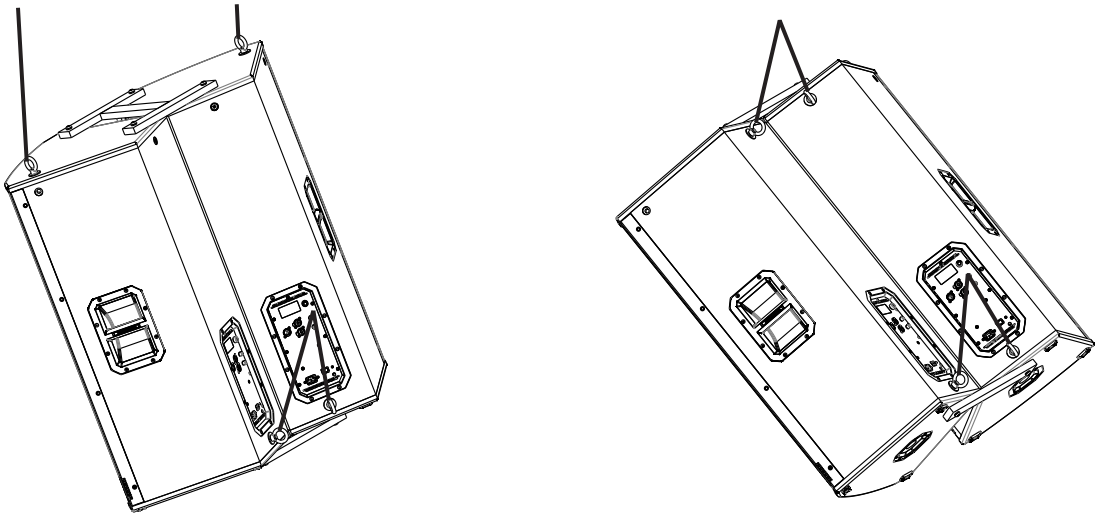

Figure 2.22: 0° to 45° (left) and 45° to 90° (right)

For more information, see *Safety, page 4*.

To **attach the eyebolts to the loudspeakers**, do the following:
Illustrations show the 0° to 45° option.

1. Using the L-Key (supplied), remove the **top front suspension point M10 screws from the top of both loudspeakers (0° to 45°)**.
   OR
   Using the L-Key (supplied), remove the **rear top suspension point M10 screws from the top of both loudspeakers (45° to 90°)**.

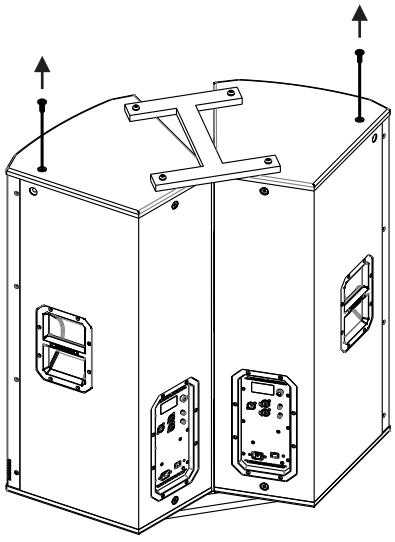

Figure 2.23: Remove screws - eyebolts

2. Insert **one (1) eyebolt** and **one (1) fender washer (supplied) into both loudspeakers**.

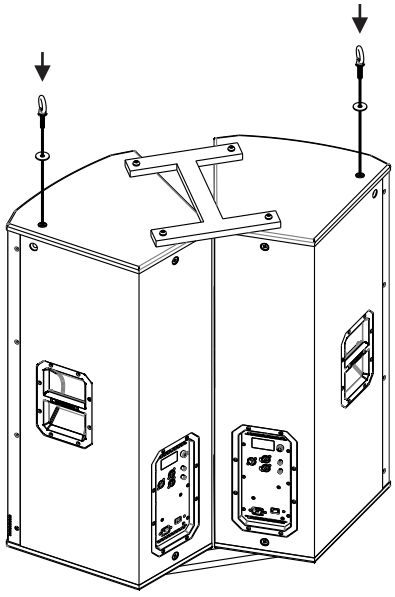

Figure 2.24: Eyebolts

3. Tighten the **eyebolts (supplied)**.
   The eyebolts are tightened securely to the loudspeakers.
4. Remove the **rear bottom suspension point M10 screws from the rear of both loudspeakers.**

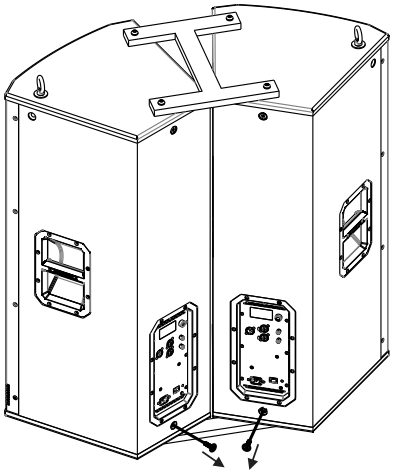

Figure 2.25: Remove screws below amplifiers

5. Insert **one (1) eyebolt** and **one (1) fender washer (supplied) into both loudspeakers**.

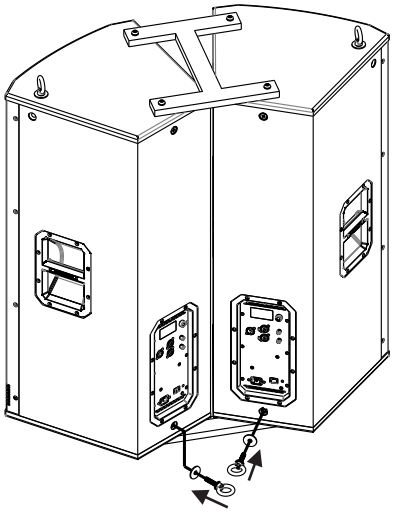

Figure 2.26: Eyebolts below the amplifiers

6. Tighten the **eyebolts (supplied)**.
   The eyebolts are tightened securely to the loudspeakers.

3 Technical data

Wall mount brackets

Shipping Dimensions (H x W x D):	3.5 in x 22.5 in x 6.5 in (88.9 mm x 572 mm x 165 mm)
Net Weight:	10.2 lb (4.6 kg)
Shipping Weight:	11 lb (5 kg)

Table 3.1: ETX-BRKT10 wall mount bracket specifications

Shipping Dimensions (H x W x D):	3.5 in x 25.75 in x 6.5 in (88.9 mm x 654 mm x 165 mm)
Net Weight:	10.9 lb (4.9 kg)
Shipping Weight:	11.8 lb (5.4 kg)

Table 3.2: ETX-BRKT12 wall mount bracket specifications

Shipping Dimensions (H x W x D):	3.5 in x 28.5 in x 6.5 in (88.9 mm x 724 mm x 165 mm)
Net Weight:	11.5 lb (5.2 kg)
Shipping Weight:	12.5 lb (5.7 kg)

Table 3.3: ETX-BRKT15 wall mount bracket specifications

Truss adapters

Shipping Dimensions (H x W x D):	16.5 in x 16.5 in x 4.5 in (419 mm x 419 mm x 114 mm)
Net Weight:	5.5 lb (2.5 kg)
Shipping Weight:	6.7 lb (3.0 kg)

Table 3.4: ETX-TCA-S truss adapter specifications

Shipping Dimensions (H x W x D):	16.5 in x 16.5 in x 4.5 in (419 mm x 419 mm x 114 mm)
Net Weight:	6.25 lb (2.83 kg)
Shipping Weight:	7.5 lb (3.4 kg)

Table 3.5: ETX-TCA-L truss adapter specifications

Array bracket

Shipping Dimensions (H x W x D):	16.5 in x 16.5 in x 4.5 in (419 mm x 419 mm x 114 mm)
Net Weight:	8.5 lb (3.86 kg)
Shipping Weight:	9.7 lb (4.0 kg)

Table 3.6: ETX-BRKT35 array bracket specifications

Bosch Security Systems, Inc
12000 Portland Avenue South
Burnsville MN 55337
USA
www.electrovoice.com
© Bosch Security Systems, Inc, 2014