5XT COAXIAL ENCLOSURE

USER MANUAL

VERSION 1.1

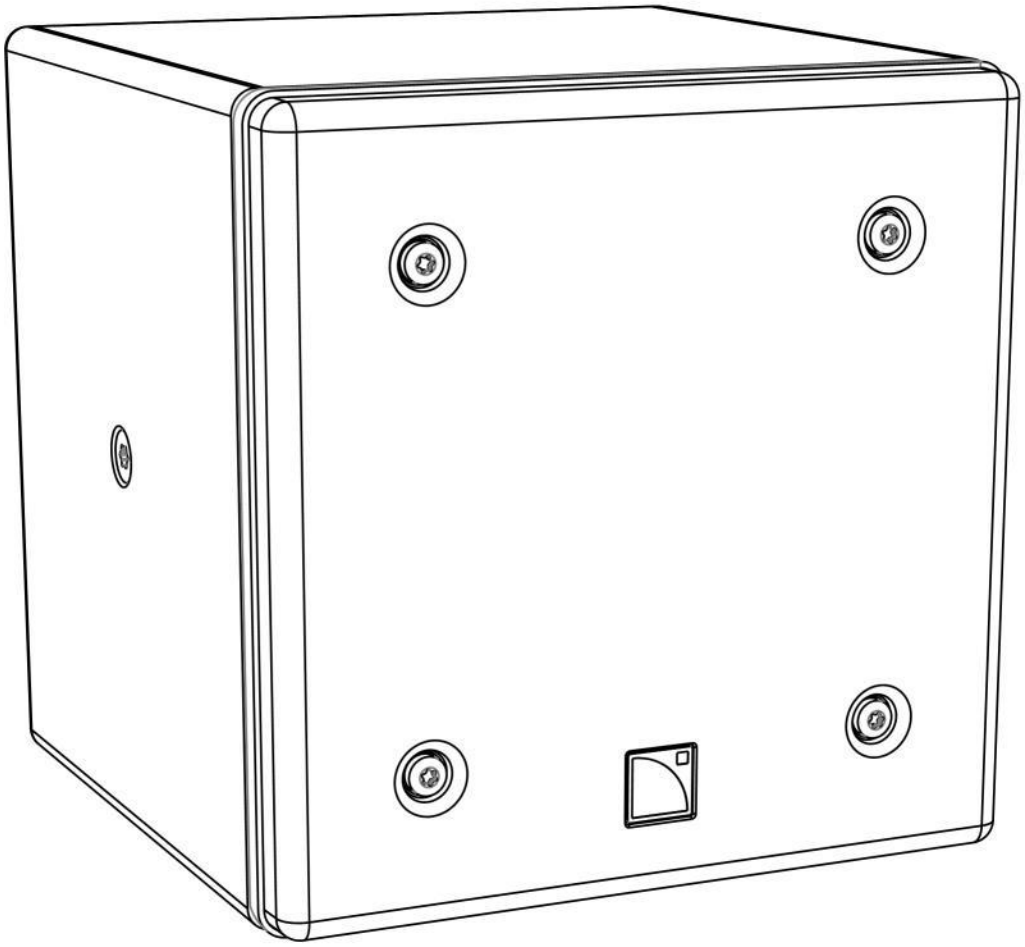

SAFETY INSTRUCTIONS

1. **Read this manual**
2. **Heed all SAFETY INSTRUCTIONS as well as DANGER and OBLIGATION warnings**
3. **Never incorporate equipment or accessories not approved by L-ACOUSTICS®**
4. **Read all the related PRODUCT INFORMATION documents before exploiting the system**
   The product information document is included in the shipping carton of the related system component.
5. **Read the RIGGING MANUAL before installing the system**
   Use the rigging accessories described in the rigging manual and follow the associated procedures
6. **Beware of sound levels**
   Do not stay within close proximity of loudspeakers in operation and consider wearing earplugs.
   Loudspeaker systems are capable of producing very high sound pressure levels (SPL) which can instantaneously lead to permanent hearing damage to performers, production crew and audience members. Hearing damage can also occur with prolonged exposure to sound: 8 h at 90 dB(A), 30 min at 110 dB(A), less than 4 min at 130 dB(A).

SYMBOLS

The following symbols are used in this document:

DANGER
This symbol indicates a potential risk of harm to an individual or damage to the product.
It can also notify the user about instructions that must be strictly followed to ensure safe installation or operation of the product.

ELECTRICAL HAZARD
This symbol indicates a potential risk of electrical injury.
It can also notify the user about instructions that must be strictly followed to ensure safe installation or operation of the product.

OBLIGATION
This symbol notifies the user about instructions that must be strictly followed to ensure proper installation or operation of the product.

EQUIPMENT
This symbol indicates the equipment, tools, and spare parts required to perform a procedure.

INFORMATION
This symbol notifies the user about complementary information or optional instructions.

▶ **ACTION**
This symbol indicates an action to perform.

WELCOME TO L-ACOUSTICS®

Thank you for choosing the L-ACOUSTICS® **5XT** coaxial enclosure.

This document contains essential information on using the system properly. Carefully read this document in order to become familiar with the system.

As part of a continuous evolution of techniques and standards, L-ACOUSTICS® reserves the right to change the specifications of its products and the content of its documents without prior notice.

Please check the L-ACOUSTICS® web site on a regular basis to download the latest documents and software updates: www.l-acoustics.com.

CONTENTS

XT RANGE 4

1 SYSTEM COMPONENTS 5

1.1 Loudspeaker enclosures 5

1.2 Powering and driving system 5

1.3 Loudspeaker cables 5

1.4 Rigging element 5

1.5 Software application 5

2 LOUDSPEAKER CONFIGURATIONS 7

2.1 Point source 7

2.2 Point source with low-frequency element 8

3 LOUDSPEAKER CONNECTION 9

3.1 Connectors 9

3.2 Custom SpeakON® to bare wire cable 10

3.3 Connection to LA4 / LA4X 11

3.4 Connection to LA8 14

APPENDIX A PRESET DESCRIPTION 17

[5XT]: full-range 17

APPENDIX B RECOMMANDATION FOR SPEAKER CABLES 17

APPENDIX C 5XT SPECIFICATIONS 18

XT RANGE

The L-ACOUSTICS® XT series offer a range of four coaxial enclosures with distinct formats, SPL capabilities and coverage angles. Intended for rental productions and fixed installations, the XT series delivers remarkable acoustic properties for various short-throw applications, including FOH systems, distributed systems, side-fill monitors, stage monitors and complementary fills.

The system range and components are as follows:

- 5XT, passive ultra-compact enclosure, 110° axi-symmetric, 95 Hz to 20 kHz;
- 8XT, passive compact enclosure, 100° axi-symmetric, 65 Hz to 20 kHz;
- 12XT, active / passive enclosure,90° axi-symmetric, 55 Hz to 20 kHz;
- 115XT HiQ, active floor monitor, 50° axi-symmetric, 50 Hz to 20 kHz;
- LA4X and LA8 amplified controllers.

An XT coaxial enclosure constitutes a real point source and offers total wave front coherence within its beam width: linear phase response, no lobbing or comb effects, even coverage angle over frequency, no minimum listening distance and even tonal balance over distance. The XT sound quality is worthy of studio monitor performances and listeners can experience a natural and transparent aural sensation.

By providing high SPL, wide directivity patterns and even sonic performance off-axis, the XT technology allows an extensive coverage with few elements and is suited to various sound reinforcement applications as a main or complementary system.

In semi-reverberant spaces, an XT point source produces far less reflected virtual sources than a classic horn-woofer combination and therefore offers a much more coherent sound field.

In distributed applications, listeners will benefit from the near field coherency of the enclosure, and an excellent directivity control allows XT sources to be precisely aligned, avoiding cross-cancelation in the HF/MF region.

This directivity control, along with the absence of lobbing effects, also provides high feedback immunity to monitoring applications. With a remarkable vocal presence, a clear sound and a smooth radiation pattern, the artist will enjoy performing with XT monitors.

XT enclosures are easy to integrate. More compact than classic 2-way enclosures, they preserve sightlines. The axi-symmetrical directivity allows setting them up horizontally or vertically indifferently. Mounting is quick and easy due to a hardware which ensures precision, safety and full compatibility with rigging standards. The wedge shape of cabinets allows floor monitoring applications. Any XT configuration can be acoustically and mechanically modeled with L-ACOUSTICS® SOUNDVISION 3D simulation software.

The LA4X and LA8 amplified controllers are the heart of the system. Thanks to their dedicated factory presets, they constitute an extremely advanced and precise drive system for the enclosures. All L-ACOUSTICS amplified controllers feature the L-DRIVE, a thermal and over-excursion protection circuit.

Up to 253 amplified controllers can be connected together via the Ethernet-based L-NET protocol. The LA NETWORK MANAGER software allows online remote control and monitoring of all the connected units, via a user-friendly and intuitive graphic interface.

1 SYSTEM COMPONENTS

The system approach developed by L-ACOUSTICS® consists in offering a global solution that guarantees the highest and most predictable level of performance at any step of loudspeaker system deployment: modeling, installation and operation. A complete L-ACOUSTICS® system includes enclosures, amplified controllers, cables, rigging system and software applications.

1.1 Loudspeaker enclosures

5XT Full-range enclosure (95 Hz – 20 kHz), 2-way passive, coaxial.

SB15m High power compact subwoofer (down to 40 Hz).

Loudspeaker system design
Sound design aspects are beyond the scope of this document. However, the various applications of the system will be based on the operating modes presented in this document.

1.2 Powering and driving system

LA4, LA4X or LA8 Amplified controller with DSP, preset library and networking capabilities.

Operating instructions
Refer to the **LA4, LA4X and LA8 user manual.**

1.3 Loudspeaker cables

DO cables (DO.7, DO10, DO25)	8-point PA-COM® loudspeaker cables respective lengths of 0.7 m/2.3 ft, 10 m/32.8 ft, and 25 m/82 ft.
DOSUB-LA8	Breakout cable for four passive enclosures. One PA-COM® to 4 × 4-point SpeakON®.
SP cables (SP.7, SP5, SP10, SP25)	4-point SpeakON® loudspeaker cables. Respective lengths of 0.7 m/2.3 ft, 5 m/16.4 ft, 10 m/32.8 ft and 25 m/82 ft.
Custom SpeakON® to bare wire cable.	2-point cable with a SpeakON® connector at one end and two wires at the other (1+ and 1-). This cable is not provided and needs to be custom made.
speaker cable 2.5 mm²	2.5 mm² cable used to connect 5XT enclosures in parallel for fixed installation.
SP-Y1	Breakout cable for two passive enclosures with CC4FP adapter. One 4-point SpeakON® to 2 × 2-point SpeakON®.

Information about the connection of the enclosures to the LA amplifiers is given in this document.
Refer to the **LA4, LA4X** and **LA8 user manuals** for detailed instructions about the whole cabling scheme, including modulation cables and network.

1.4 Rigging element

Rigging elements or procedures are not presented in this document.
Refer to the **5XT rigging manual**.

1.5 Software application

SOUNDVISION Proprietary acoustical and mechanical 3D modeling software.

LA NETWORK MANAGER Remote control and monitoring of amplified controllers

Using L-ACOUSTICS® software
Refer to the SOUNDVISION user manual and the LA NETWORK MANAGER tutorial.

SB15m

5XT

SPY1

CC4FP

LA4

DO.7

SP7

LA4X

DO10

SP5

LA8

DO25

SP10

DOSUB-LA8

SP25

Soundvision

LA Network Manager

5XT system components (excluding rigging elements and modulation cables)

2 LOUDSPEAKER CONFIGURATIONS

2.1 Point source

In this configuration, the 5XT system operates over the nominal frequency range of the enclosure.

The 5XT enclosure is driven by the LA4, LA4X or LA8 amplified controller with a factory preset.

Standalone 5XT

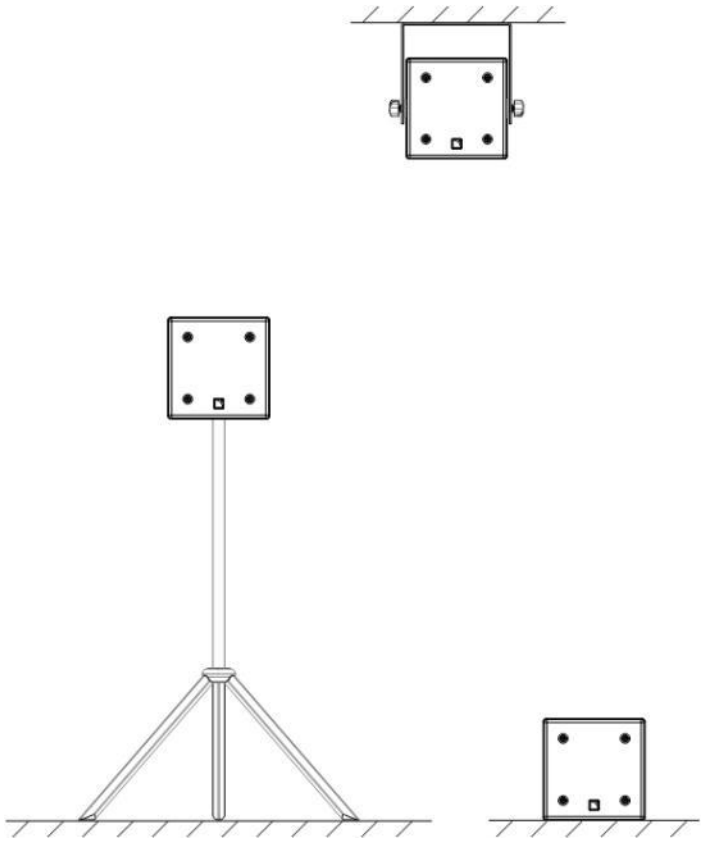

Enclosure	[PRESET]
5XT	**[5XT]**

Frequency range (-10 dB)

95Hz – 20kHz

2.2 Point source with low-frequency element

In this configuration, the frequency range of the 5XT system is extended in the low end.

Each enclosure type is driven by the LA4, LA4X or LA8 amplified controller with factory presets. The 5XT enclosure is driven with the same preset as in point source configuration. The SB15m subwoofer is driven with a preset featuring an upper frequency limit at 100 Hz, for an optimal acoustic coupling with the enclosure.

5XT + SB15m

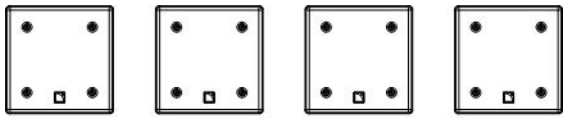

Enclosure	[PRESET]
5XT	**[5XT]**
SB15m	**[SB15_100]**

Frequency range (-10 dB)

40 Hz – 20 kHz

Recommended ratio

1 × SB15m: 4 × 5XT

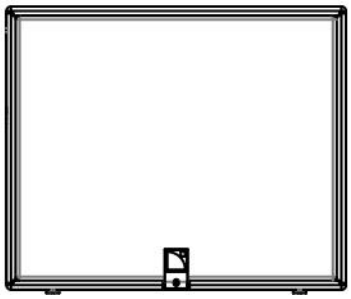

3 LOUDSPEAKER CONNECTION

3.1 Connectors

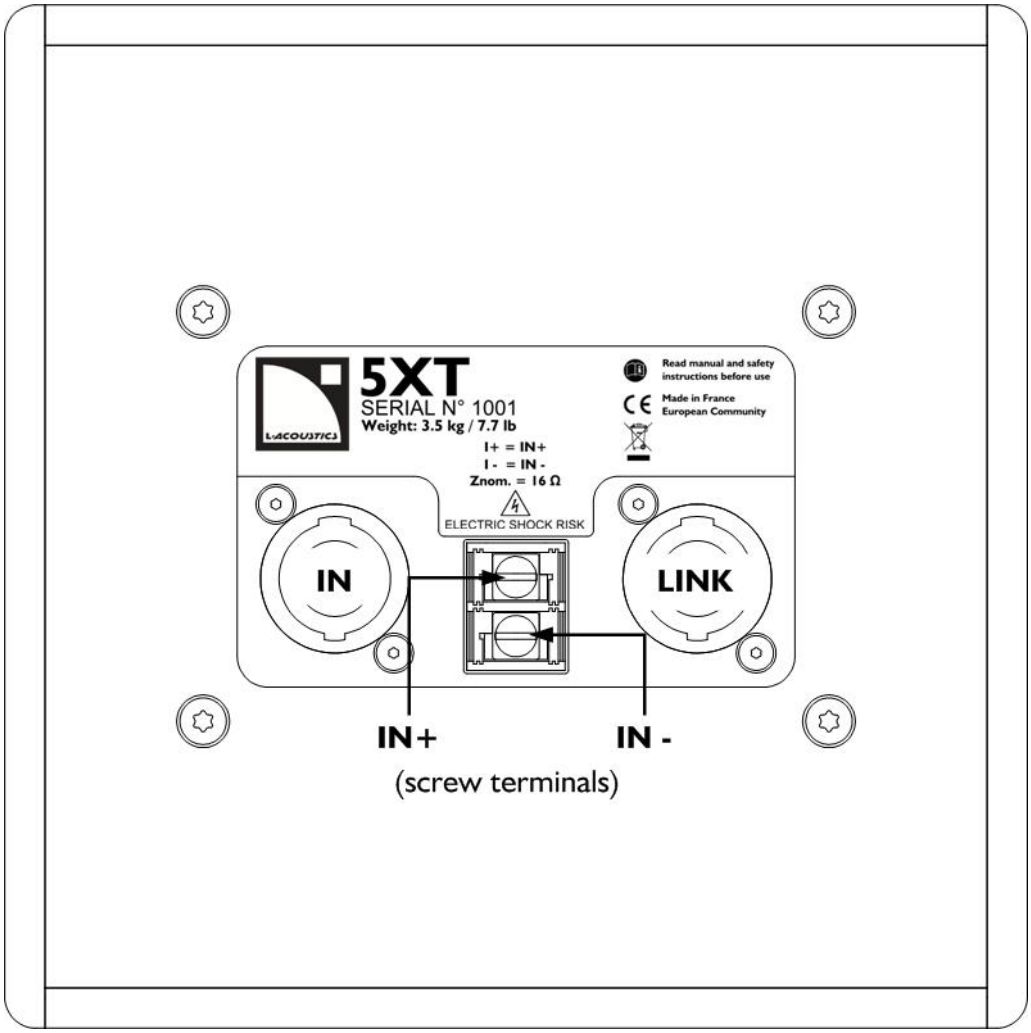

The 5XT is a 2-way passive enclosure equipped with two 4-point SpeakON® connectors wired in parallel and 2 screw terminals.

The IN connector allows receiving the audio signals. The LINK connector allows routing them to another 5XT enclosure in parallel.

Each screw terminal acts as IN and LINK.

ELECTRICAL HAZARD
Risk of electrical injuries.
Do not touch the screw terminals when they are connected to a powered amplified controler.
Turn off the amplified controller before any operation on the terminals.

Internal pinout for L-ACOUSTICS® 2-way passive enclosures

SpeakON® points	1+	1 -	2 +	2 -
Transducer connectors	+	-	Not used	Not used

3.2 Custom SpeakON® to bare wire cable

The **Custom SpeakON® to bare wire cable** can be used to connect 5XT enclosures to a controlled amplifier using the screw terminals. Additional enclosures can then be connected in parallel with 2.5 mm² speaker wire instead of SpeakON® cables.

This cable is not provided by L-ACOUSTICS® but it can be made from an **SP cable**.

Remove one of its SpeakON® connectors to reveal two pairs of wires. Each wire is color-coded (red, black, yellow and white) and corresponds to a channel and polarity (1+ and 1-, 2+ and 2-).

The information given here only apply to **SP cables**. The color codes descibed here are specific to L-ACOUSTICS® cables and may be different for other manufacturers. Check in their documentation before any operation.

Refer to the figure and table below to know which wire is associated with which SpeakON® points.

Wire routing in a SP cable

Wire color	SpeakON® point	Transducer connector
Red	1+	1+ first enclosure
Black	1-	1- first enclosure
Yellow	2+	1+ second enclosure
White	2-	1- second enclosure

Custom SpeakON® to bare wire cable routing

3.3 Connection to LA4 / LA4X

To connect the 5XT to the LA4 or LA4X, three options are available.

Option A

Maximum of 16 enclosures per LA4 / LA4X
Four 5XT enclosures can be connected to each output channel on the LA4 / LA4X. Therefore, a single LA4 / LA4X amplified controller can drive up to 16 enclosures.

Impedance load
16 Ω for 1 enclosure, 8 Ω for 2 enclosures and 4 Ω for 4 enclosures.

With various enclosure types, for example two 5XT and two SB15m, this cabling scheme needs a dedicated custom preset.

- ▶ Connect an **SP cable** (SP.7, SP5, SP10 or SP25) to the OUT1/OUT2 connector of the LA4 / LA4X.
- ▶ Use a **CC4FP adapter** to connect an **SP-Y1** cable and split the audio signals into two channels, each one feeding one enclosure.
- ▶ Apply the same cabling scheme for the OUT3/OUT4 connector of the LA4 / LA4X.
- ▶ If necessary, use **SP cables** to connect additional similar enclosures in parallel with the first ones.

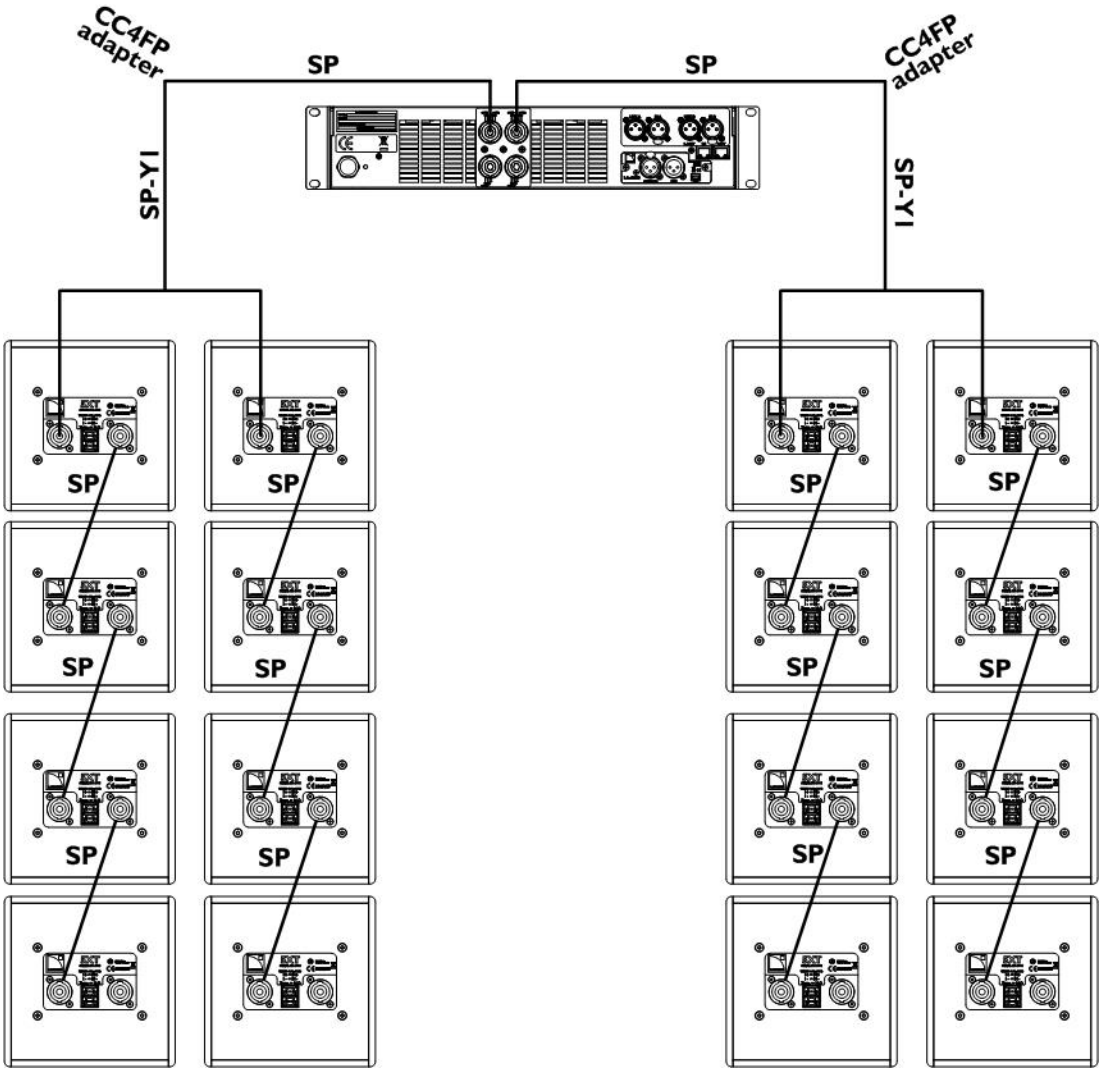

LA4 / LA4X Option A maximum configuration

Option B

Maximum of 16 enclosures per LA4 / LA4X
Four 5XT enclosures can be connected to each output channel on the LA4 / LA4X. Therefore, a single LA4 / LA4X amplified controller can drive up to 16 enclosures.

Impedance load
16 Ω for 1 enclosure, 8 Ω for 2 enclosures and 4 Ω for 4 enclosures.

With various enclosure types, for example two 5XT and two SB15m, this cabling scheme needs a dedicated custom preset.

▶ Use **SP cables** (SP.7, SP5, SP10 or SP25) to connect four similar enclosure to the four LA4 / LA4X output channels.
▶ Use **SP cables** to connect additional similar enclosures in parallel with the first ones.

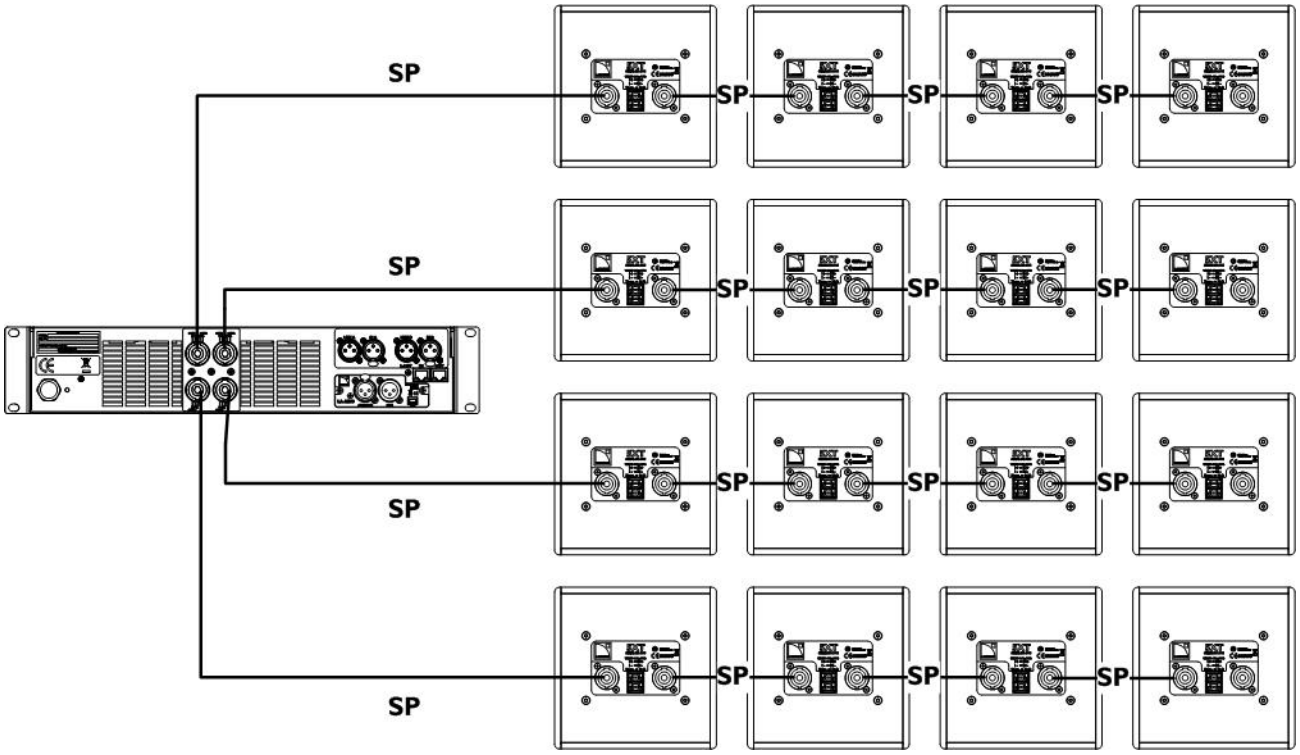

LA4 / LA4X option B maximum configuration

Option C

ELECTRICAL HAZARD
Risk of electrical injuries.
Do not touch the screw terminals when they are connected to a powered amplified controler.
Turn off the amplified controller before any operation on the terminals.

Maximum of 16 enclosures per LA4 / LA4X
Four 5XT enclosures can be connected to each output channel on the LA4 / LA4X. Therefore, a single LA4 / LA4X amplified controller can drive up to 16 enclosures.

This option uses bare speaker wire and is therefore reserved to fixed installation.

Impedance load
16 Ω for 1 enclosure, 8 Ω for 2 enclosures and 4 Ω for 4 enclosures.

- ▶ Connect the SpeakON® end of a **Custom SpeakON® to bare wire cable** to the OUT1-OUT3 connector of the LA4 / LA4X.
- ▶ Connect the **pos. (+) cable** to the IN+ screw terminal and the **neg. (-) cable** to the **IN-** screw terminal.
- ▶ Apply the same cabling scheme with the OUT2-OUT4 connector of the LA4 / LA4X.
- ▶ Use **speaker cable 2.5 mm²** to connect additional similar enclosures in parallel with the first ones.

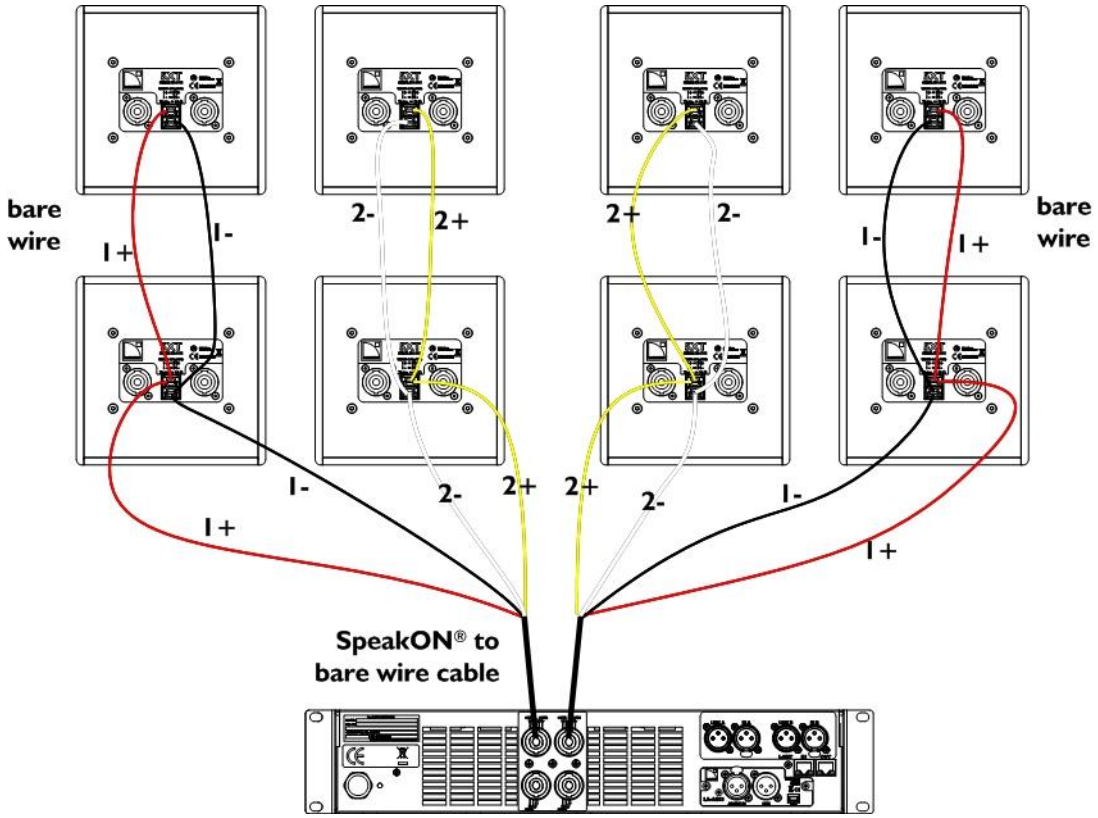

LA4 / LA4X option C

3.4 Connection to LA8

To connect the 5XT to the LA8, two options are available.

Option A

Maximum of 24 enclosures per LA8
Six 5XT can be connected in parallel to each output channel on the LA8. Therefore, a single LA8 amplified controller can drive up to 24 enclosures.

Impedance load
16 Ω for 1 enclosure, 8 Ω for 2 enclosures, 4 Ω for 4 enclosures and 2,7 Ω for 6 enclosures in parallel.

With various enclosure types, for example two 5XT and two SB15m, this cabling scheme needs a dedicated custom preset.

▶ Connect a **DO cable** (DO.7, DO10 or DO25) to the PA-COM® connector of the LA8.
▶ Use a **DOSUB-LA8** to split the audio signals into four channels, each one feeding passive enclosures or subwoofers.
▶ Use **SP cables** to connect additional similar enclosures in parallel with the first ones.

Correspondance DOSUB-LA8 SpeakON® points to LA8 output channels:
SPK1 = OUT 1
SPK2 = OUT 2
SPK3 = OUT 3
SPK4 = OUT 4

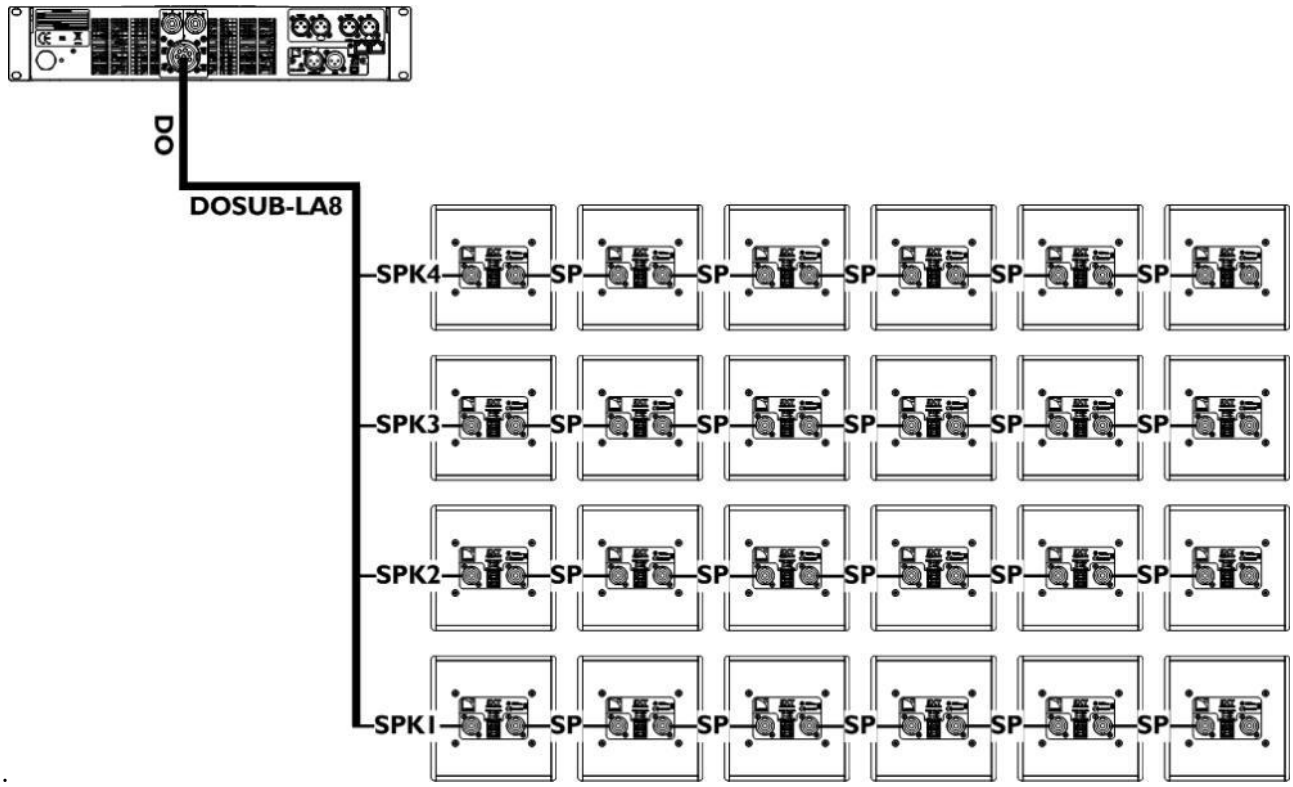

LA8 option A maximum configuration

Option B

Maximum of 24 enclosures per LA8
Six 5XT can be connected in parallel to each output channel on the LA8. Therefore, a single LA8 amplified controller can drive up to 24 enclosures.

Impedance load
16 Ω for 1 enclosure, 8 Ω for 2 enclosures, 4 Ω for 4 enclosures and 2,7 Ω for 6 enclosures in parallel.

With various enclosure types, for example two 5XT and two SB15m, this cabling scheme needs a dedicated custom preset.

- ▶ Connect an **SP cable** (SP.7, SP5, SP10 or SP25) to one of the SpeakON® connectors of the LA8.
- ▶ Use a **CC4FP adapter** to connect an **SP-Y1** cable and split the audio signals into two channels, each one feeding one enclosure passive enclosure or subwoofer.
- ▶ Apply the same cabling scheme for the other LA8 SpeakON® connector.
- ▶ Use **SP cables** to connect additional similar enclosures in parallel with the first ones.

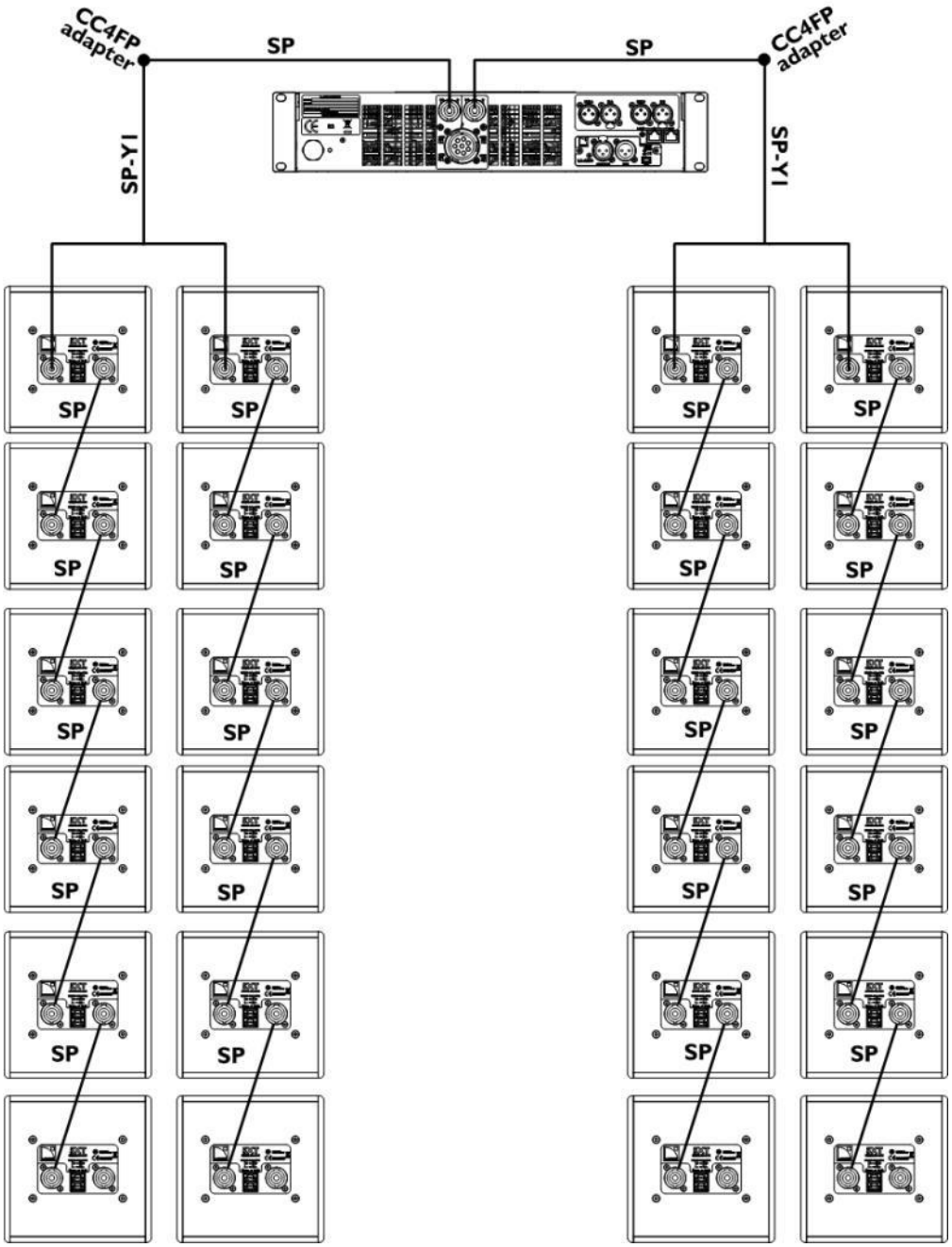

LA8 Option B maximum configuration

Option C

ELECTRICAL HAZARD
Risk of electrical injuries.
Do not touch the screw terminals when they are connected to a powered amplified controler.
Turn off the amplified controller before any operation on the terminals.

Maximum of 24 enclosures per LA8
Six 5XT can be connected in parallel to each output channel on the LA8. Therefore, a single LA8 amplified controller can drive up to 24 enclosures.

The color code of wires in SP cables is specific to L-ACOUSTICS®. Verify which point is associated with each wire before using other manufacturer's cables.

This option uses bare speaker wires and is therefore reserved to fixed installation.

Impedance load
16 Ω for 1 enclosure, 8 Ω for 2 enclosures, 4 Ω for 4 enclosures and 2,7 Ω for 6 enclosures in parallel.

- Connect the SpeakON® end of a **Custom SpeakON® to bare wire cable** to one of the SpeakON® connector of the LA8.
- Connect the **pos. (+) cable** to the **IN+** screw terminal and the **neg. (-) cable** to the **IN-** screw terminal.
- Apply the same cabling scheme with the other LA8 SpeakON® connector.
- Use **bare speaker cables 2.5mm²** to connect additional 5XT enclosures in parallel with the first ones.
  Connect the IN+ connector of the first enclosure to the IN+ connector of the second and the IN- to the IN- connector.

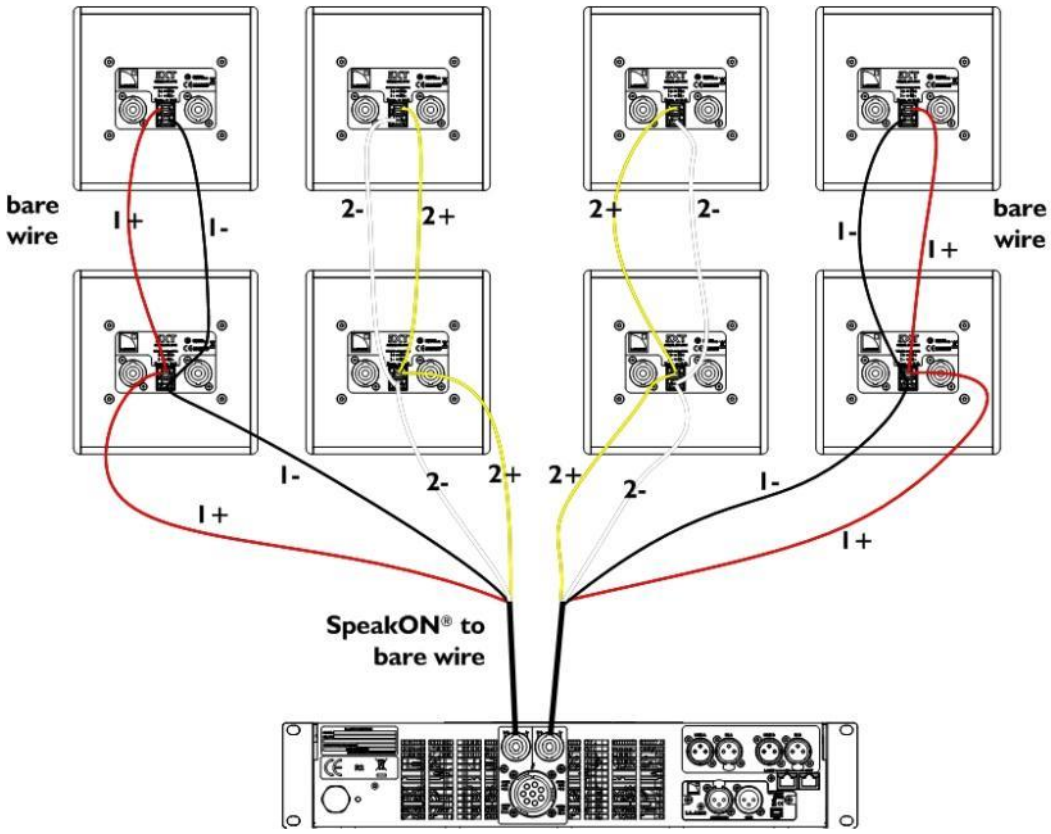

LA8 option C

APPENDIX A PRESET DESCRIPTION

[5XT]: full-range

The same preset is used for the 5XT enclosure in Point-source configuration, or in Point-source with low-frequency element configuration (with SB15m subwoofers).

Elements to connect	Inputs/Outputs	Routing	Accessible (O) and blocked (X) parameters				
			Routing	Gain	Delay	Polarity	Mute
5XT	OUT 1	PA	IN A	0 dB	0 ms	+	ON
5XT	OUT 2	PA	IN A	0 dB	0 ms	+	ON
5XT	OUT 3	PA	IN B	0 dB	0 ms	+	ON
5XT	OUT 4	PA	IN B	0 dB	0 ms	+	ON

APPENDIX B RECOMMANDATION FOR SPEAKER CABLES

Cable quality and resistance

Only use high-quality fully insulated speaker cables made of stranded copper wire.

Use cables of gauge offering low resistance per unit length and keep the cables as short as possible.

The following table provides the recommended maximum length depending on the cable cross-section and on the impedance load connected to the amplifier.

			Recommended maximum length					
Cable cross-section			8 Ω load		4 Ω load		2.7 Ω load	
mm^2	SWG	AWG	m	ft	m	ft	m	ft
2.5	15	13	30	100	15	50	10	33
4	13	11	50	160	25	80	17	53
6	11	9	74	240	37	120	25	80
10	9	7	120	390	60	195	40	130

APPENDIX C 5XT SPECIFICATIONS

Description	2-way passive coaxial enclosure, amplified by LA4, LA4X or LA8	
Usable bandwidth (-10 dB)	95 Hz – 20 kHz ([5XT] preset)	
Maximum SPL[1]	119 dB ([5XT] preset)	
Coverage angle (-6 dB)	110° axi-symmetric	
Transducers	LF: 1 × 5” weather resistant, bass-reflex HF: 1 × 1” diaphragm compression driver	
Nominal impedance	16 Ω	
RMS power handling	85 W ([5XT] preset)	
Connectors	IN: 1 × 4-point SpeakON® LINK: 1 × 4-point SpeakON® IN/LINK: 2 × screw terminals	
Dimensions	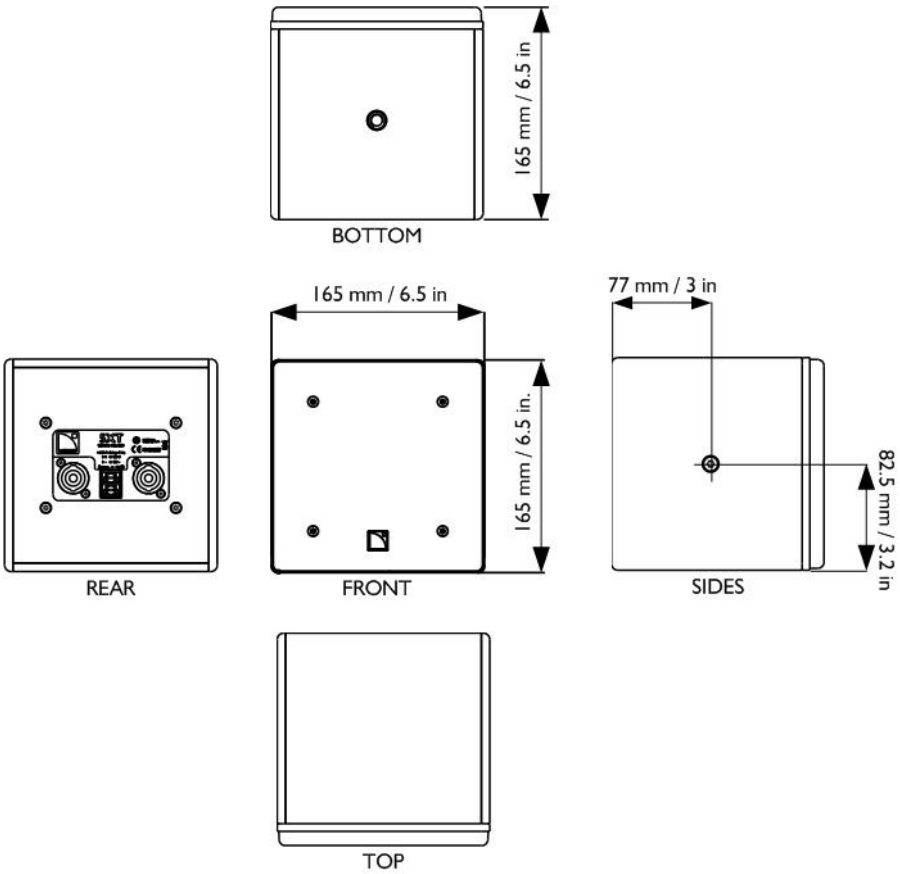	
Rigging components	1 × 3/8” insert for microphone stand 2 × M6 inserts for ETR5 U-bracket	
Physical data	Weight (net):	3.5 kg / 7.7 lb
	Cabinet:	baltic birch plywood
	Finish:	Grayish Brown RAL 8019® or Pure White RAL 9010®
	Custom finish:	RAL code on special order
	Rigging components and grill:	steel with anti-corrosion coating

[1] Peak level at 1 m under free field conditions using 10 dB crest factor pink noise with specified preset.

Document reference: 5XT_UM_EN_1.1

Distribution date: January 7, 2014

© 2013 L-ACOUSTICS®. All rights reserved.

No part of this publication may be reproduced or transmitted in any form or by any means without the express written consent of the publisher.