audio-technica

# Engineered Sound Wireless Systems

## User Manual

English

# Safety precautions (receiver/transmitter)

## Important information

### Warning

To prevent fire or shock hazard, do not expose this apparatus to rain or moisture.

### Caution

- Do not expose this apparatus to drips or splashes.
- To avoid electric shock, do not open the cabinet.
- Refer servicing to qualified personnel only.
- Do not expose this apparatus to excessive heat such as sunshine, fire or the like.
- Do not subject this apparatus to strong impact.
- Do not place any objects filled with liquids, such as vases, on this apparatus.
- To prevent fire, do not place any naked flame sources (such as lighted candles) on this apparatus.
- Do not install this apparatus in a confined space such as a bookcase or similar unit.
- Install this apparatus only in the place where ventilation is good.

### Battery caution

- Keep batteries out of the reach of children.
- Observe correct polarity as marked.
- Do not expose the battery to excessive heat such as sunshine, fire or the like.
- Always consider the environmental issues and follow local regulations when disposing of batteries.
- Remove depleted battery immediately.
- Danger of explosion if battery is incorrectly replaced. Replace only with the same or equivalent type.
- Do not use a leaking battery. If battery leakage occurs, avoid contact with skin. If contact occurs, immediately wash thoroughly with soap and water.
- If battery leakage comes into contact with your eyes, immediately flush with water and seek medical attention.

## For customers in the USA

### FCC Notice

**Warning:**

This device complies with Part 15 of the FCC Rules. Operation is subject to the following two conditions: (1) This device may not cause harmful interference, and (2) this device must accept any interference received, including interference that may cause undesired operation.

**Caution:**

You are cautioned that any changes or modifications not expressly approved in this manual could void your authority to operate this equipment.

## RF Exposure Statement

This device (ESW-R4180DAN) complies with FCC radiation exposure limits set forth for an uncontrolled environment and meets the FCC radio frequency (RF) Exposure Guidelines. This equipment has very low levels of RF energy that it deemed to comply without maximum permissive exposure evaluation. (MPE). But it is desirable that it should be installed and operated keeping the radiator at least 20cm or more away from person's body.
This device (ESW-T4101 / ESW-T4102/C510 / ESW-T4106 / ESW-T4107) complies with FCC radiation exposure limits set forth for an uncontrolled environment and meets the FCC radio frequency (RF) Exposure Guidelines. This equipment has very low levels of RF energy that is deemed to comply without testing of specific absorption rate (SAR).

**Contact:**

Responsible Company: Audio-Technica U.S., Inc.

Address: 1221 Commerce Drive, Stow, Ohio 44224, USA

Tel: 330-686-2600

# For customers in Canada

## ISED statement

This device contains licence-exempt transmitter(s)/receiver(s) that comply with Innovation, Science and Economic Development Canada's licence-exempt RSS(s). Operation is subject to the following two conditions:

1. This device may not cause interference.
2. This device must accept any interference, including interference that may cause undesired operation of the device.
This device complies with RSS-102 radiation exposure limits set forth for an uncontrolled environment. This equipment should be installed and operated with minimum distance 20cm between the radiator & your body.

# Safety precautions (charging station)

## Important information

### Warning

To prevent fire or shock hazard, do not expose this apparatus to rain or moisture.

### Caution

- Do not expose this apparatus to drips or splashes.
- To avoid electric shock, do not open the cabinet.
- Refer servicing to qualified personnel only.
- Do not expose this apparatus to excessive heat such as sunshine, fire or the like.
- Do not subject this apparatus to strong impact.
- This apparatus should be located close enough to the AC outlet so that you can easily grasp the AC adapter at any time.
- In case of emergency, disconnect the AC adapter quickly.
- Do not install this apparatus in a confined space such as a bookcase or similar unit.
- Install this apparatus only in the place where ventilation is good.
- The rating label is put on the bottom of this apparatus.

## For customers in the USA

### FCC Notice

**Warning:**

This device complies with Part 15 of the FCC Rules. Operation is subject to the following two conditions: (1) This device may not cause harmful interference, and (2) this device must accept any interference received, including interference that may cause undesired operation.

**Caution:**

You are cautioned that any changes or modifications not expressly approved in this manual could void your authority to operate this equipment.

**Note:**

This equipment has been tested and found to comply with the limits for a Class B digital device, pursuant to part 15 of the FCC Rules. These limits are designed to provide reasonable protection against harmful interference in a residential installation. This equipment generates, uses and can radiate radio frequency energy and, if not installed and used in accordance with the instructions, may cause harmful interference to radio communications. However, there is no guarantee that interference will not occur in a particular installation. If this equipment does cause harmful interference to radio or television reception, which can be determined by turning the equipment off and on, the user is encouraged to try to correct the interference by one or more of the following measures:

– Reorient or relocate the receiving antenna.

– Increase the separation between the equipment and receiver.

– Connect the equipment into an outlet on a circuit different from that to which the receiver is connected.

– Consult the dealer or an experienced radio/TV technician for help.

**Contact:**

Responsible Company: Audio-Technica U.S., Inc.

Address: 1221 Commerce Drive, Stow, Ohio 44224, USA

Tel: 330-686-2600

# For customers in Canada

## ISED statement

CAN ICES-3(B)/NMB-3(B)

# Notes on use

## This system

- Be sure to read the user manual for any microphone or cable that you attach to the product.
- If you use the product near a TV or radio antenna, noise may be generated in the TV or radio. If this occurs, move the product away from the device.
- Be careful of interference noise caused by the surrounding radio wave environment and similar factors.
- This system may be affected by the spark noise of vehicles, dimmer of lighting apparatus, computers, office automation apparatus and electronic musical instruments. Place and use the product where it is less likely to be affected by the above.
- Be sure to use this system in combination with components specified by Audio-Technica.
- When installing this system, ensure that there are no obstacles between the receiver and transmitter that may block the signal.
- Over time, discoloration may occur due to ultraviolet rays (especially direct sunlight) and friction.
- It is legally prohibited to dismantle and modify this product. In addition, this product is so precisely manufactured that dismantling it could cause electric shock, failure, or fire. Never dismantle this product.
- When multiple units are used simultaneously, transmitters should be at least 1 m (3.3') apart, receivers should be at least 2 m (6.6') apart, and transmitters and receivers should be at least 2 m (6.6') apart.
- When a howling, beeping or squealing sound is produced during use, turn down the output volume of the connected mixer/amplifier.

## Receiver

- Be sure the connected cable is plugged all the way into the product.

## Transmitter

- If you use the transmitter close to an electronic or communications device (such as a mobile phone), the transmitter may produce unwanted noise. If this occurs, move the transmitter away from the device.
- To prevent depletion of the rechargeable batteries, turn off the transmitter when not in use and when not loaded in the charging station.

## Charging station

- Be sure the connected cable is plugged all the way into the product.
- Unplug the power cord from the power outlet when not using the charging station.

# Maintenance

If the product becomes stained or covered with dust, wipe it off with a dry and soft cloth.

- Be sure to turn the device off before performing maintenance.
- Dirt easily adheres to the charging terminals of the transmitter and charging station. Charging may not be possible if these products are used with dirty terminals. If these terminals are dirty, wipe away this dirt with a cotton swab or something similar. Be careful not to apply too much force when doing so.
- Do not use benzene, thinner, or electrical contact cleaner, etc. Doing so may cause deformation, damage, or malfunction.

# About this system

Audio-Technica's Engineered Sound Wireless Systems is a DECT-compliant wireless system that offers high-quality sound. This system eliminates frequency coordination, which was a limitation of conventional wireless systems, allowing for use of numerous microphones (transmitters) with no license applications.
Microphones (transmitters) can be used immediately after removing them from the charging station, and operation is simple regardless of the size of the conference room. The simplified wiring eliminates the hassle of installing multiple antennas.
Settings can be configured easily with Audio-Technica's dedicated software, Wireless Manager.

# Devices compliant with this system

This system consists of the following devices.

## Receiver

❶ 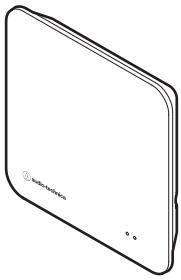

❶ **ESW-R4180DAN**

8ch Receiver (with Dante)

## Transmitters

❶

❷ 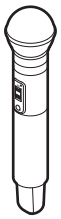

❸ 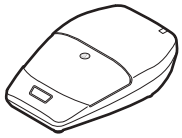

❹ 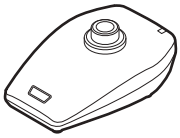

❶ **ESW-T4101**

Body-Pack Transmitter

❷ **ESW-T4102/C510**

Handheld Transmitter

❸ **ESW-T4106**

Boundary Microphone Transmitter

❹ **ESW-T4107**

Desk Stand Transmitter

# Charging stations

1

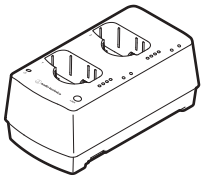

2

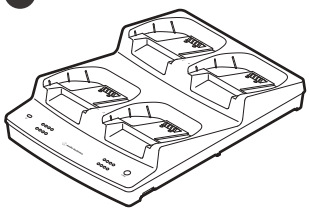

1 **ESW-CHG4**

Two-Bay Charging Station (for ESW-T4101 and ESW-T4102/C510)

2 **ESW-CHG5**

Four-Bay Charging Station (for ESW-T4106 and ESW-T4107)

# Part names and functions

## ESW-R4180DAN

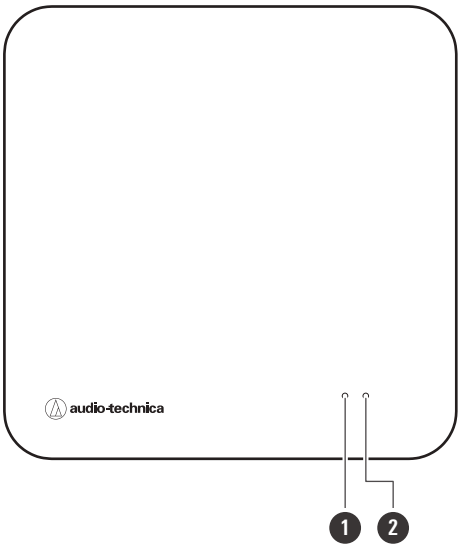


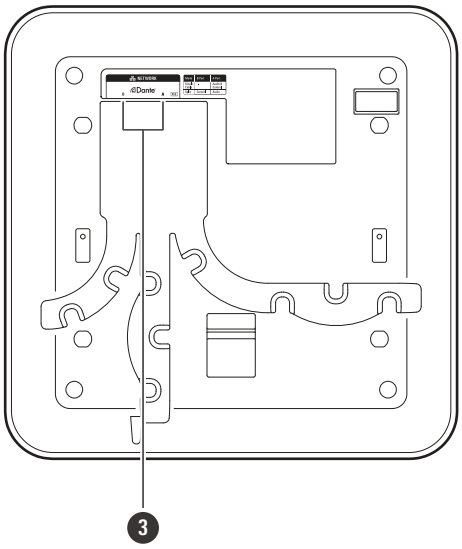


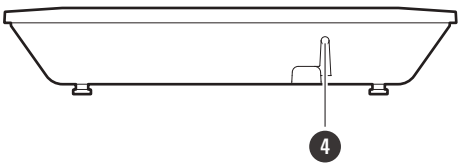


**1 Status indicator lamp**

Lights when the device is on. This lamp also shows the status of this receiver. Refer to "Indicator lamp displays" (p. 122) for details.

**2 Link indicator lamp**

Shows the link status of the transmitter. Refer to "Indicator lamp displays" (p. 122) for details.

**3 Network A/B ports**

Network ports for the Dante standard. Use to connect LAN cables (Cat. 5e or higher, shielded cables with conductor size of 24AWG or greater in diameter). These ports connect to a local area network, allowing for external control via applications. The device turns on when the network A port is connected to a PoE-compatible switching hub.

| Mode | A port (PoE input)/B port |
|---|---|
| Single Cable mode | Network A port: IP/Dante<br>Network B port: Not used. |
| Split mode | Network A port: Dante<br>Network B port: IP |

**4 Reset button**

Use to check the network mode, reset the network, and perform a factory reset.

# ESW-T4101

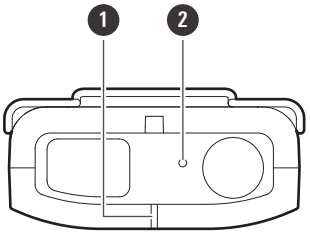


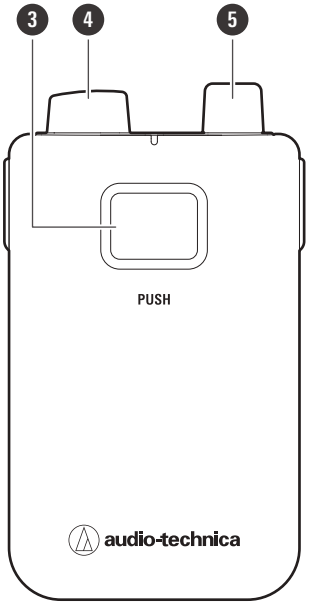


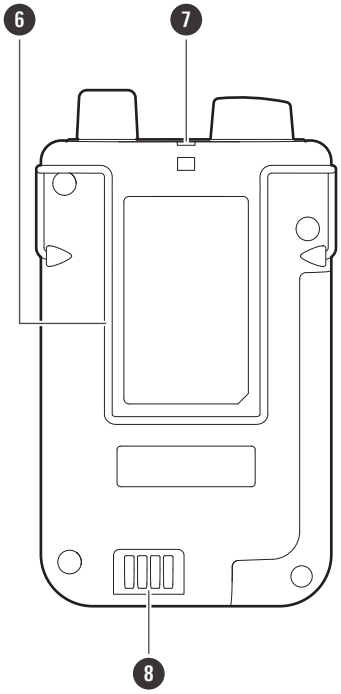


1. **Status indicator lamp**

   Lights when the device is on. This lamp also shows the status of this transmitter.

2. **Internal microphone**

3. **PUSH button**

   Turns the device on or off and switches between muted and unmuted.

4. **Transmission antenna**

5. **Input connector**

   Use to connect an external microphone.

6. **Clip**

   Use to connect this device to a belt or something similar.

7. **Strap hole**

8. **Charging terminals**

# ESW-T4102/C510

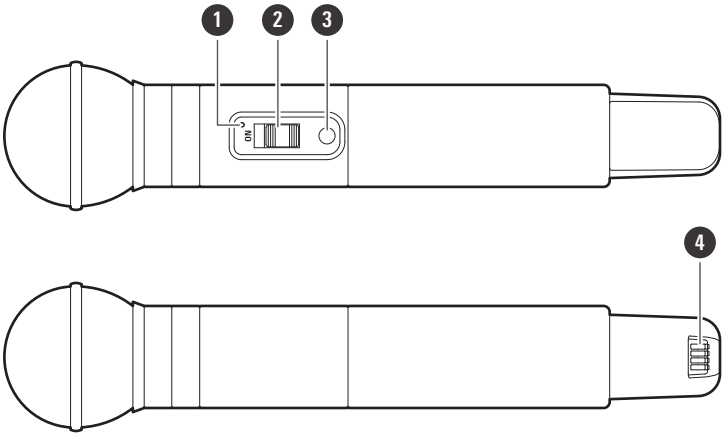


**1 Status indicator lamp**

Lights when the device is on. This lamp also shows the status of this transmitter.

**2 Mute switch**

Switches between muted and unmuted.

**3 Power button**

Turns the power on or off.

**4 Charging terminals**

# ESW-T4106

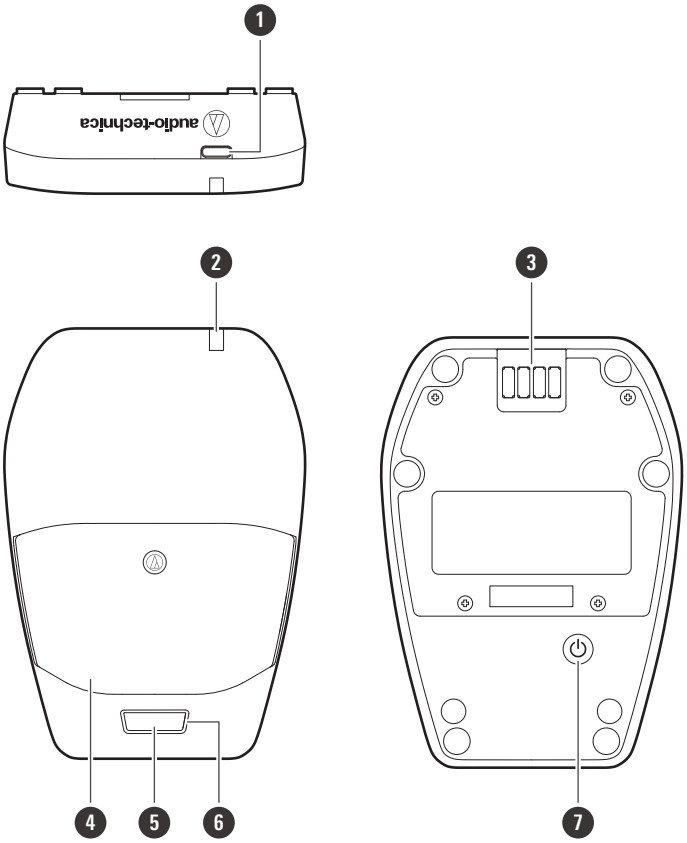


**1 USB port (USB Type-C™)**

Use to charge this device via a USB cable.

**2 Status indicator lamp**

Lights when the device is on. This lamp also shows the status of this transmitter.

**3 Charging terminals**

**4 Microphone**

**5 Talk switch**

Switches between muted and unmuted.

**6 Talk indicator lamp**

Shows the muted/unmuted status.

**7 Power button**

Turns the power on or off.

# ESW-T4107

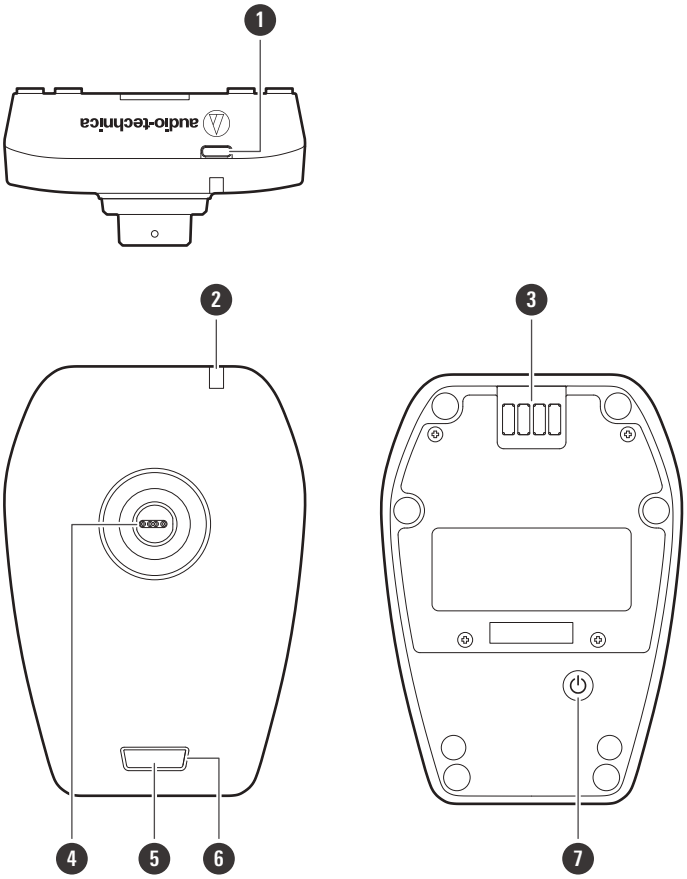


**1 USB port (USB Type-C)**

Use to charge this device via a USB cable.

**2 Status indicator lamp**

Lights when the device is on. This lamp also shows the status of this transmitter.

**3 Charging terminals**

**4 Input connector**

Use to connect a gooseneck microphone.

**5 Talk switch**

Switches between muted and unmuted.

**6 Talk indicator lamp**

Shows the muted/unmuted status.

**7 Power button**

Turns the power on or off.

# ESW-CHG4

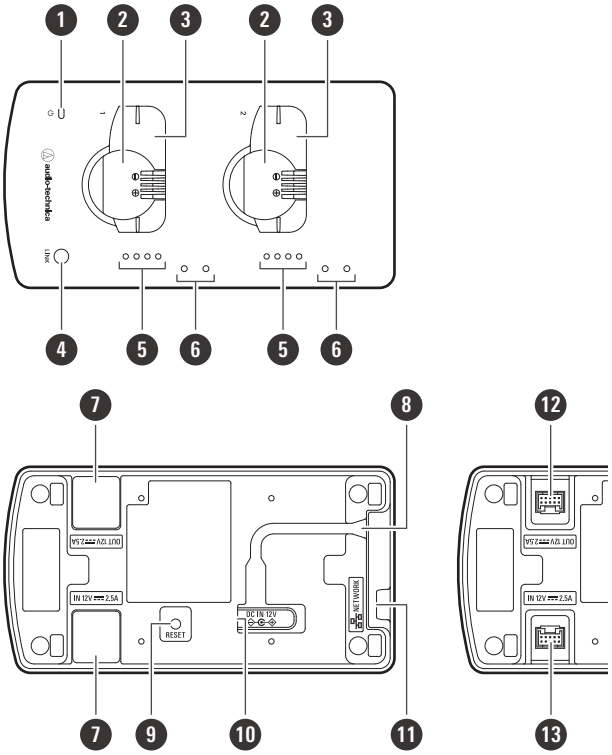


1 **Power indicator lamp**

Lights when the device is on. This lamp also shows the network connection status.

2 **Charging port (for ESW-T4102/C510)**

3 **Charging port (for ESW-T4101)**

4 **LINK button**

Use to configure links.

5 **Status indicator lamps**

Show the charging status.

6 **Mounting holes for mic holder**

Use to mount mic holders.

7 **Cap for DC jack**

Removed when linking multiple charging stations.

8 **Cord outlet**

Passes the power cord of the AC adapter.

9 **Reset button**

Use to check the network mode, reset the network, and perform a factory reset.

10 **DC input jack**

Connect the AC adapter.

**⓫ Network port**

Use to connect a LAN cable (Cat. 5e or higher, shielded cable). This port connects to a local area network, allowing for external control via applications.

**⓬ DC output jack for linking**

Use to link multiple charging stations. This jack communicates with and supplies power to the linked charging stations.

**⓭ DC input jack for linking**

Use to link multiple charging stations. This jack receives communication and power supplied from the linked charging stations.

## Mic holders

If you mount the included mic holders on the device, you can hang pin microphone cables on these holders during charging.

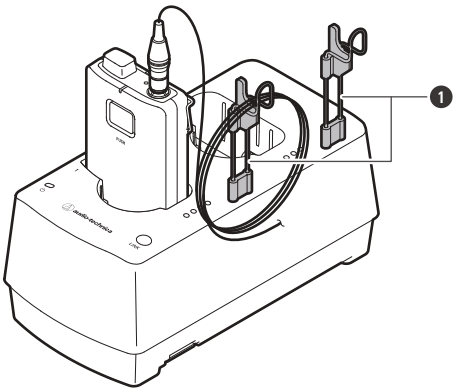


❶ Mic holder

# ESW-CHG5

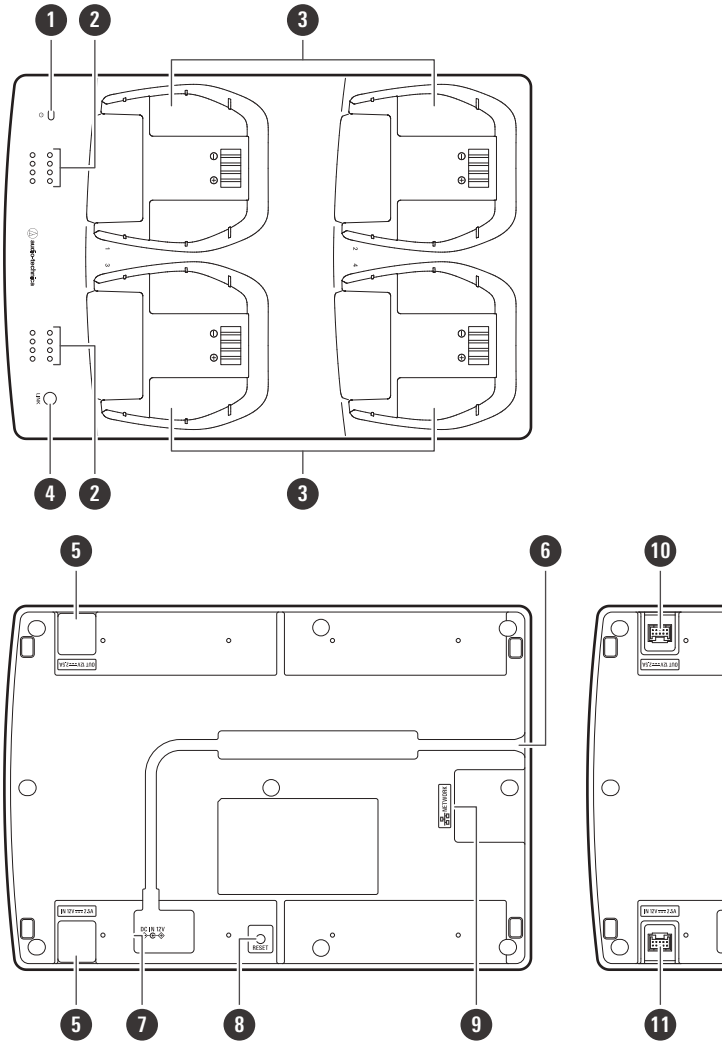


1 **Power indicator lamp**

Lights when the device is on. This lamp also shows the network connection status.

2 **Status indicator lamps**

Show the charging status.

3 **Charging port (for ESW-T4106/ESW-T4107)**

4 **LINK button**

Use to configure links.

5 **Cap for DC jack**

Removed when linking multiple charging stations.

6 **Cord outlet**

Passes the power cord of the AC adapter.

7 **DC input jack**

Connect the AC adapter.

**8 Reset button**

Use to check the network mode, reset the network, and perform a factory reset.

**9 Network port**

Use to connect a LAN cable (Cat. 5e or higher, shielded cable). This port connects to a local area network, allowing for external control via applications.

**10 DC output jack for linking**

Use to link multiple charging stations. This jack communicates with and supplies power to the linked charging stations.

**11 DC input jack for linking**

Use to link multiple charging stations. This jack receives communication and power supplied from the linked charging stations.

## LAN cable wiring patterns

Wire the LAN cable appropriately to match the installation environment.

### Wiring from the side

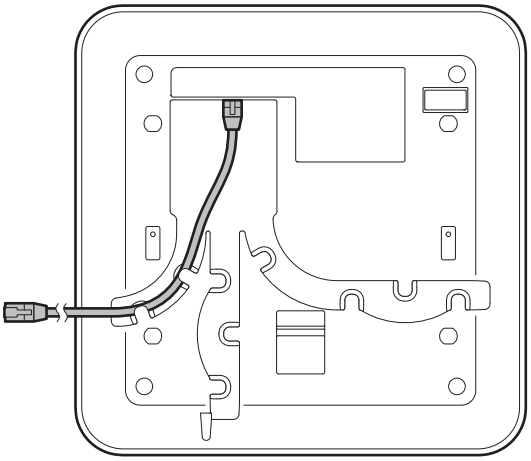

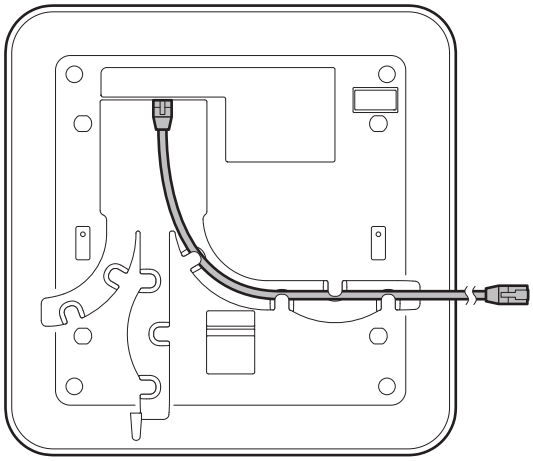

### Wiring from the bottom

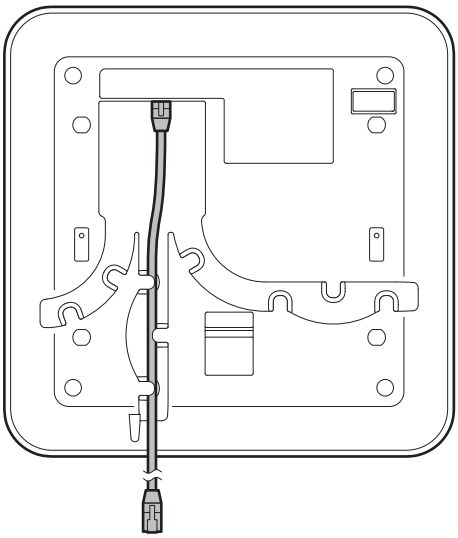

## Wiring from the rear

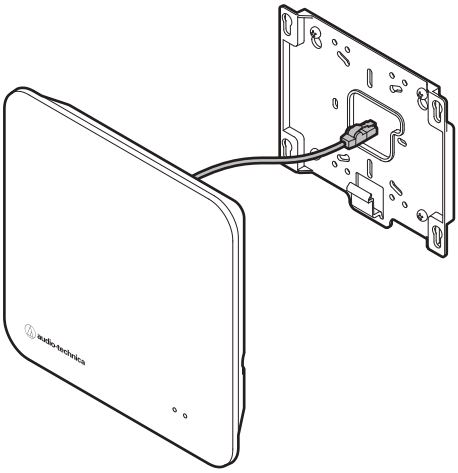


# How to attach

**1** **Use screws to attach the included bracket.**

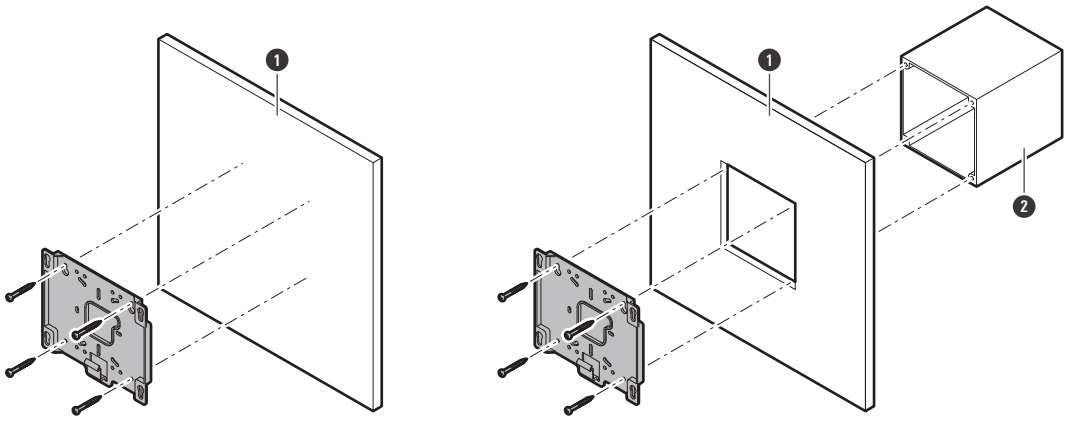


❶ Wall or ceiling

❷ Electrical box or outlet box

**2** **Catch the receiver on the bracket.**

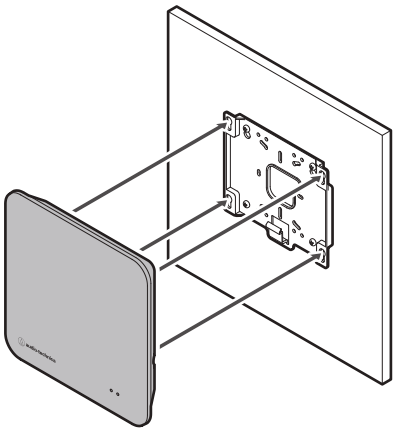

**3** **Slide the receiver down to attach it.**

- Slide the receiver until it clicks, and then check whether the receiver is securely mounted on the bracket.

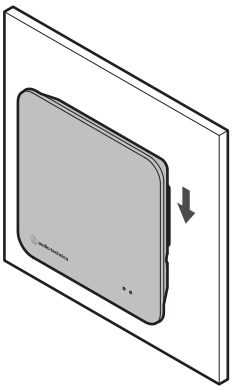

- For stable reception, install the receiver in a non-obstructed location. Low RF signal may result if there are obstructions between the receiver and transmitter.

# How to remove

**1** **Slide the receiver up.**

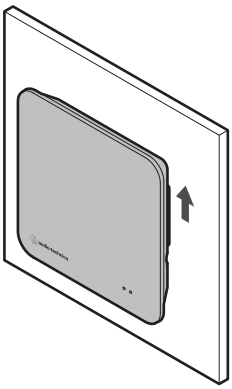

**2** **Remove the receiver from the bracket.**

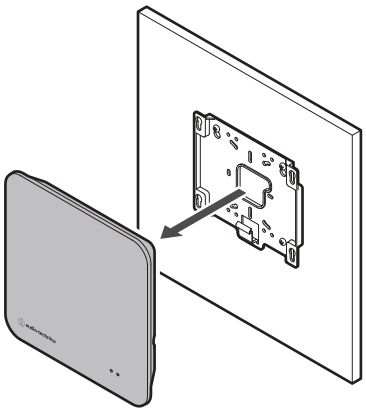

- When removing the receiver, be careful to not pull on the connected cable.

# Basic flow of using this system

This section explains basic operations to allow for prompt use of this system. For detailed operations and setup methods, refer to their explanation pages.

## With a Dante-compatible device (ESW-R4180DAN)

This system receives signals from eight transmitters with a single receiver and can output Dante-output audio.

**1** **Install Wireless Manager on a PC.**

- From our company website (https://www.audio-technica.com/), select your country or region, and then download the program from the corresponding website.

**2** **Connect a LAN cable to the receiver.**

- Refer to "How to install the receiver" (p. 20) for how to install the receiver.
- For the LAN cable, use a Cat. 5e or higher, shielded cable with conductor size of 24AWG or greater in diameter.
- Connecting the LAN cable to a PoE power supplying switch turns the receiver on. After some tens of seconds, the status indicator lamp lights.

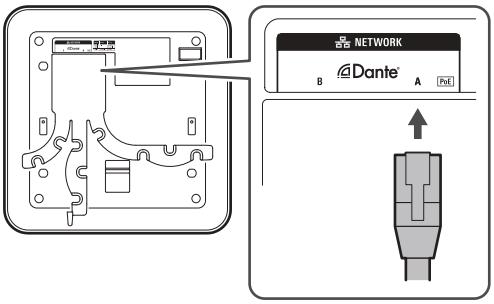


**3** **Attach a LAN cable and the power cord of the AC adapter to the charging station, and then connect the power plug to an electrical outlet.**

- For the LAN cable, use a Cat. 5e or higher, shielded cable and connect to the same network as the receiver.
- The charging station turns on and its power indicator lamp lights.

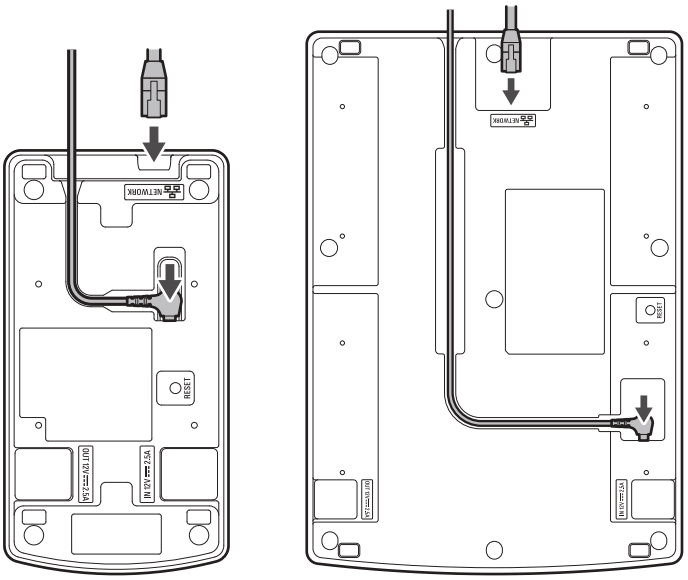


**4** **Insert the transmitters to use into the charging station.**

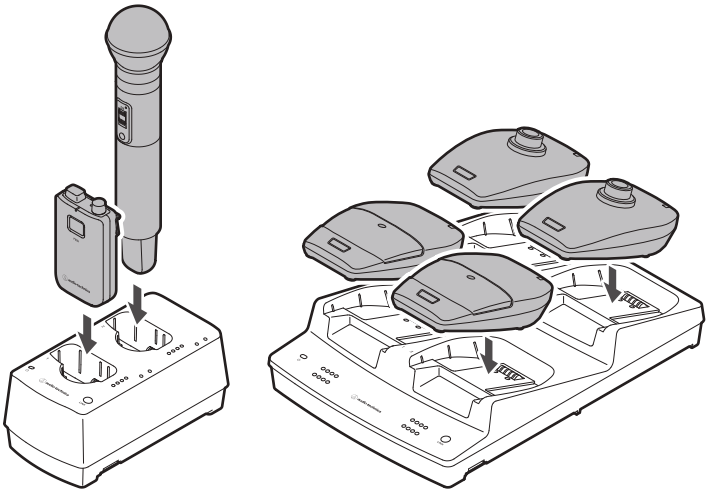

**5** **Connect the PC to the same network as the receiver.**

- With the factory default setting, the IP addresses of the receiver and charging station are set to “Auto”. Configure the PC so that its IP address setting is acquired automatically.

**6** **Start Wireless Manager, and then configure the link to each device.**

- Refer to "Configuring links to devices" (p. 75) for details.

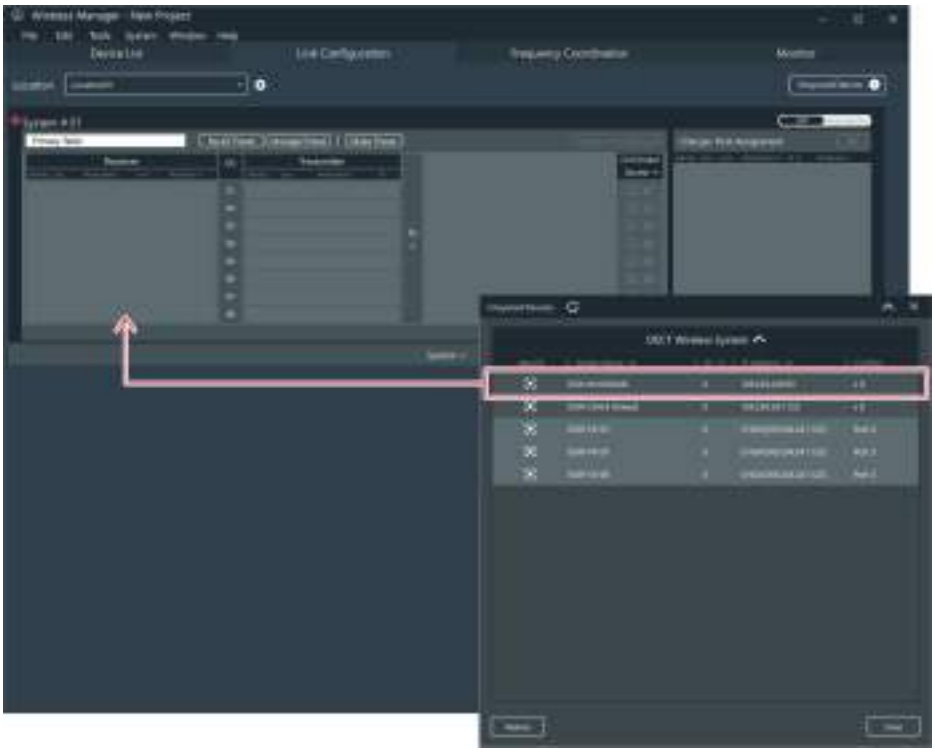

**7** **Connect a Dante-compatible mixer to the same network, assign this mixer with Dante Controller, and then set the audio output.**

- You can download Dante Controller from the Audinate website (https://www.audinate.com/).

**8** **Remove the transmitters from the charging station.**

**9** **Press and hold the power button on each transmitter (the PUSH button for the ESW-T4101) for approximately 2 seconds, and then release the button.**

- When the link between the receiver and the transmitter is established, the link indicator lamp on the receiver and the status indicator lamp on the transmitter light.
- It may take some time (approximately 10 seconds) for the first link to be established.

**10** **Check the audio input.**

**11** **Monitor each device in Wireless Manager.**

# System configuration examples

## ESW-R4180DAN (only one device connected)

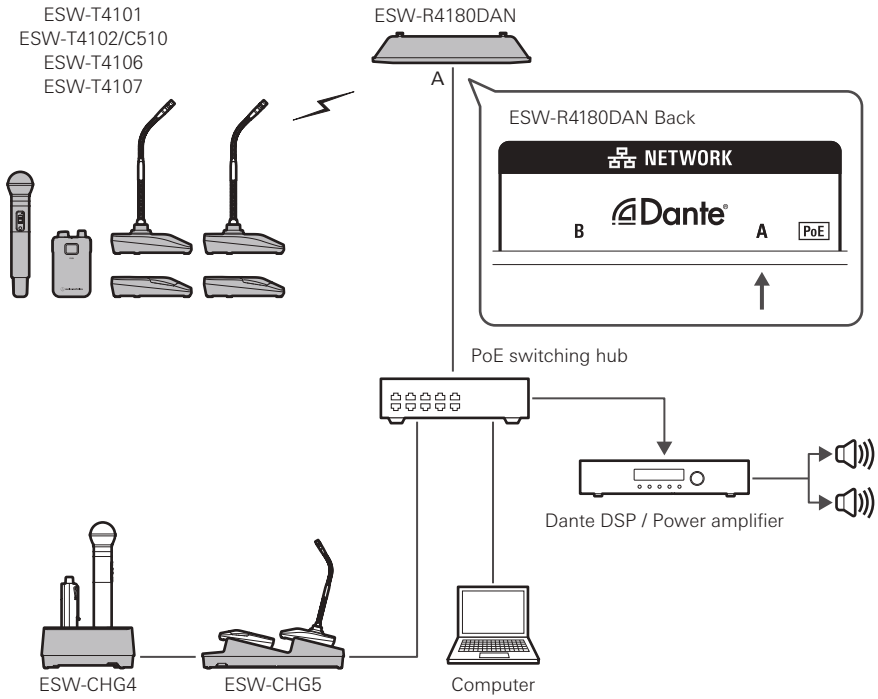

## Usage example

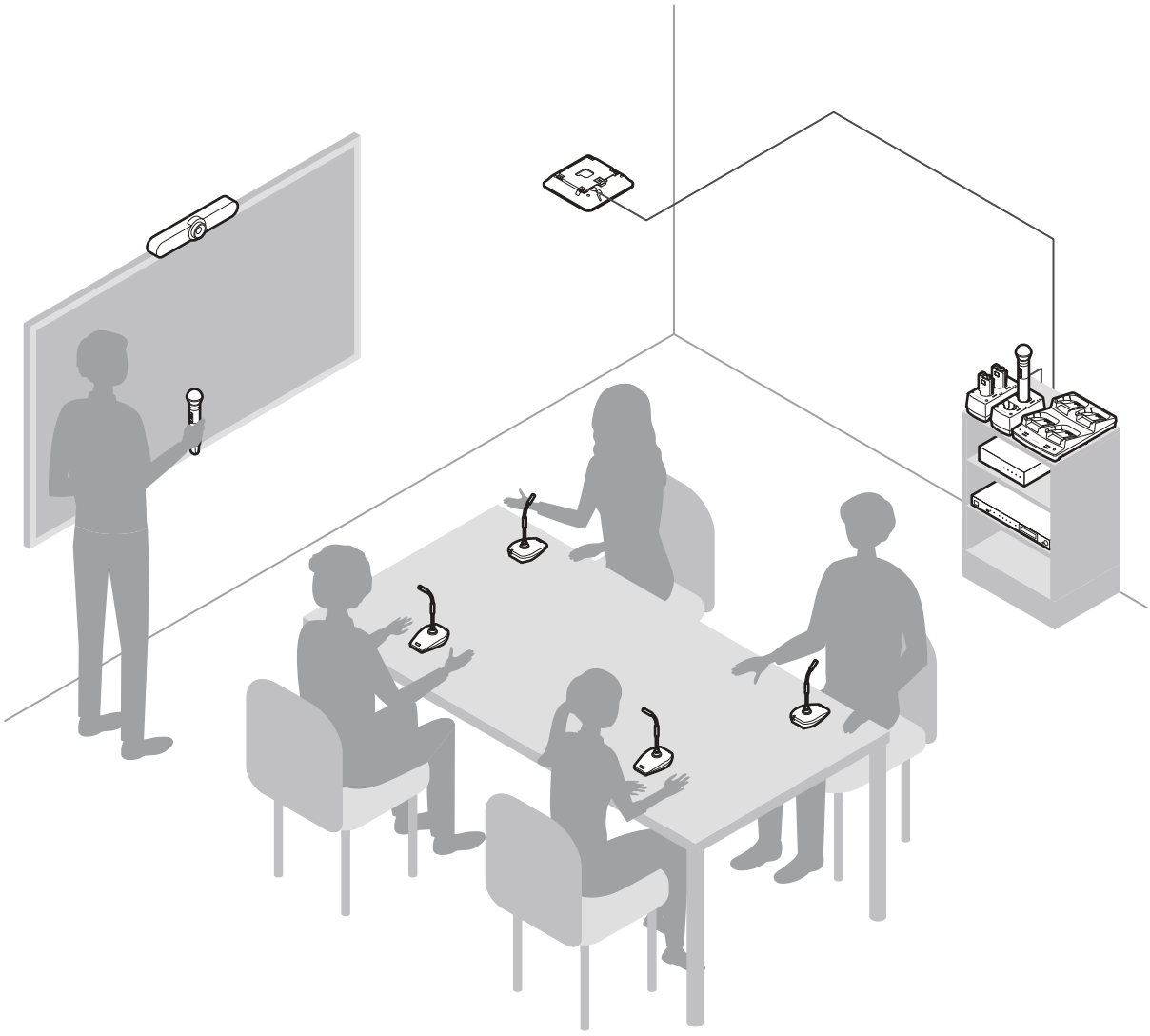

# ESW-R4180DAN (multiple devices connected)

If there are multiple receivers on the same network, they are automatically set as the leader and followers via a synchronization signal between receivers, ensuring stable operation. If one of the following actions occurs on the network while a receiver is linked with a transmitter, the synchronization is lost and all links on the network may be disconnected until synchronization is established again.

- The leader receiver turns off.
- RF mode is changed on the leader receiver.
- A DECT RF scan is performed on the leader receiver.
- A new receiver is added to the same network.

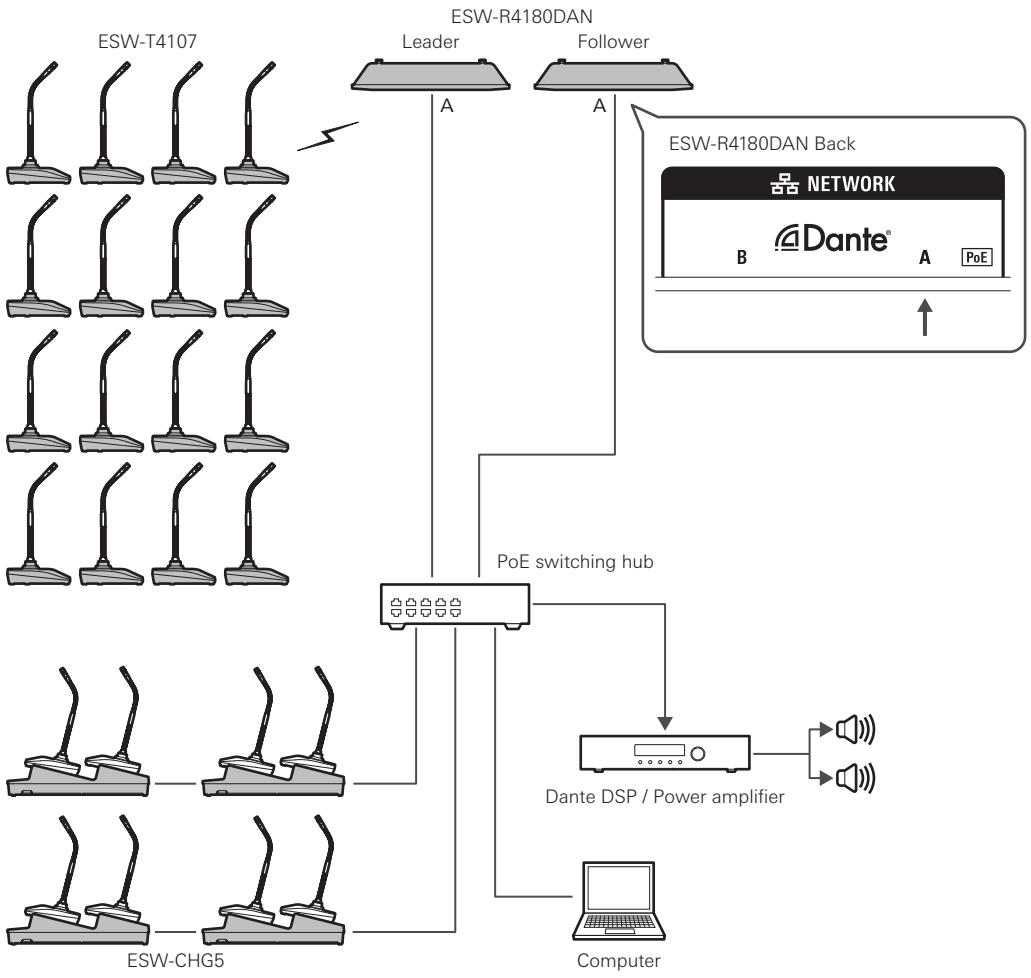
ESW-R4180DAN
ESW-T4107
Leader
Follower
A
A
ESW-R4180DAN Back
NETWORK
Dante
B
A
PoE
PoE switching hub
Dante DSP / Power amplifier
ESW-CHG5
Computer

# How to charge

## Charging the ESW-T4101 or ESW-T4102/C510

Use charging station ESW-CHG4 to charge the devices.

**1** **Attach a LAN cable and the power cord of the AC adapter to the charging station, and then connect the power plug to an electrical outlet.**

- Pass the power cord of the AC adapter along the groove on the charging station and bring it out from the cord outlet.
- For the LAN cable, use a Cat. 5e or higher, shielded cable.
- The charging station turns on and its power indicator lamp lights.

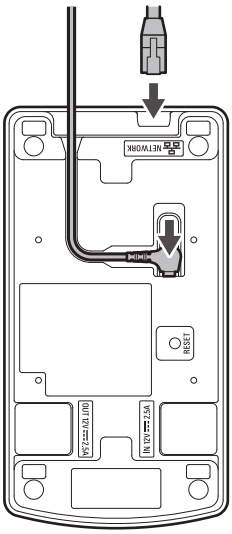


| Power indicator lamp display | Operation status |
|---|---|
| Lit in green | Device on (connected to network) |
| Lit in blue | Device on (not connected to network) |

**2** **Insert the transmitters to charge into the charging ports of the charging station.**

- You can charge up to two transmitters at the same time in one charging station.
- Check the orientation of the transmitters before inserting them. Transmitters cannot be charged if their orientation is not correct.
- When charging a handheld transmitter, do so with the microphone capsule attached.
- When the charging of a transmitter starts, the status indicator lamps on the charging station light.

## How to charge

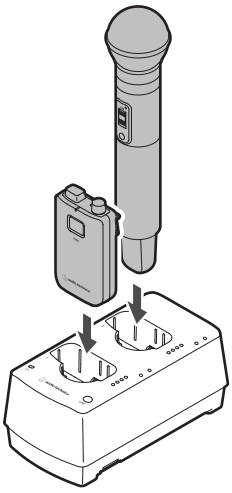

| Status indicator lamp display | Charging status |
|---|---|
| Four lamps flashing in red in order | Preparing for charging |
| One lamp lit in red | Charging (0% to less than 25%) |
| Two lamps lit in red | Charging (25% to less than 50%) |
| Three lamps lit in red | Charging (50% to less than 75%) |
| All four lamps lit in red | Charging (75% to less than 100%) |
| All four lamps lit in green | Charging complete |
| One lamp flashing in red | Communication failure[1]/preliminary charging[2] |
| All four lamps flashing in red | Charging defect |

[1] A charging defect occurs when the communication failure status continues for approximately 30 minutes.

[2] The preliminary charging status occurs when charging starts after a battery is fully discharged or when charging starts with a rechargeable battery at a low temperature. The charging station will return to the normal charging status after a few minutes.

- Transmitter rechargeable batteries can be charged approximately 300 times, but this limit varies depending on the usage. You can use Wireless Manager to check the charging cycle count and the health status (deterioration) of a battery. Refer to "How to read the charging station monitor" (p. 83) for details.
- If you insert a transmitter into a charging station and all four status indicator lamps flash in red, there may be a charging defect. Remove the AC adapter, and then attach it again. If all four status indicators still flash in red, the transmitter's rechargeable battery may have reached the end of its service life. Replace it with a new rechargeable battery.
- Dirt easily adheres to the charging terminals of the transmitter and charging station. Charging may not be possible, charging may finish before completion, and the battery level may not be displayed properly in Wireless Manager if these products are used with dirty terminals. If these terminals are dirty, wipe away this dirt with a cotton swab or something similar. Be careful not to apply too much force when doing so.

# Charging the ESW-T4106 or ESW-T4107

## Using a charging station

Use charging station ESW-CHG5 to charge the devices.

**1** **Attach a LAN cable and the power cord of the AC adapter to the charging station, and then connect the power plug to an electrical outlet.**

- Pass the power cord of the AC adapter along the groove on the charging station and bring it out from the cord outlet.
- For the LAN cable, use a Cat. 5e or higher, shielded cable.
- The charging station turns on and its power indicator lamp lights.

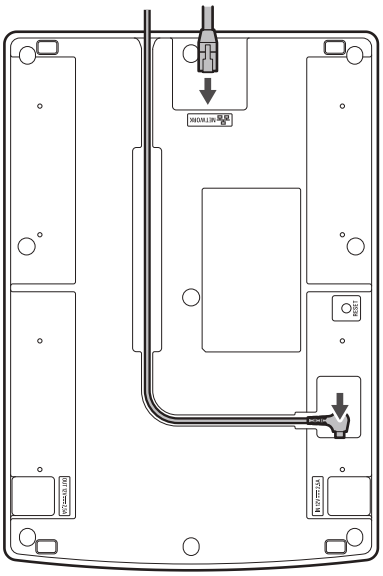

| Power indicator lamp display | Operation status |
|---|---|
| Lit in green | Device on (connected to network) |
| Lit in blue | Device on (not connected to network) |

**2** **Insert the transmitters to charge into the charging ports of the charging station.**

- You can charge up to four transmitters at the same time in one charging station.
- Check the orientation of the transmitters before inserting them. Transmitters cannot be charged if their orientation is not correct.
- Although we recommend that you charge transmitters while they are off, you can also charge them while they are on. In such cases, the transmitters will turn off automatically.
- When the charging of a transmitter starts, the status indicator lamps on the charging station light.

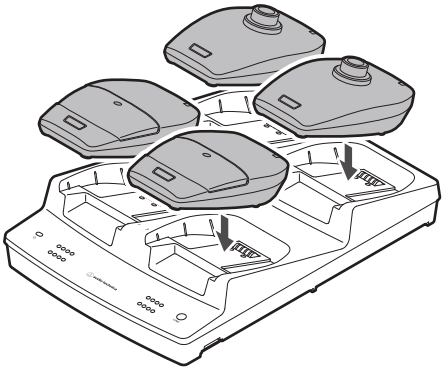

| Status indicator lamp display | Charging status |
|---|---|
| Four lamps flashing in red in order | Preparing for charging |
| One lamp lit in red | Charging (0% to less than 25%) |
| Two lamps lit in red | Charging (25% to less than 50%) |
| Three lamps lit in red | Charging (50% to less than 75%) |
| All four lamps lit in red | Charging (75% to less than 100%) |
| All four lamps lit in green | Charging complete |
| One lamp flashing in red | Communication failure[1]/preliminary charging[2] |
| All four lamps flashing in red | Charging defect |

[1] A charging defect occurs when the communication failure status continues for approximately 30 minutes.

[2] The preliminary charging status occurs when charging starts after a battery is fully discharged or when charging starts with a rechargeable battery at a low temperature. The charging station will return to the normal charging status after a few minutes.

- Transmitter rechargeable batteries can be charged approximately 300 times, but the maximum charging capacity varies depending on the usage. Check the maximum charging capacity with the monitor in Wireless Manager. Refer to "How to read the charging station monitor" (p. 83) for details.
- Whenever possible, use transmitters after they are fully charged.
- If you insert a transmitter into a charging station and all four status indicator lamps flash in red, there may be a charging defect. Remove the AC adapter, and then attach it again. If all four status indicators still flash in red, the transmitter's rechargeable battery may have reached the end of its service life. Replace it with a new rechargeable battery.
- Dirt easily adheres to the charging terminals of the transmitter and charging station. Charging may not be possible if these products are used with dirty terminals. If these terminals are dirty, wipe away this dirt with a cotton swab or something similar. Be careful not to apply too much force when doing so.

## Charging via a USB connection

You can charge a transmitter without using a charging station by connecting a commercially available USB cable and USB power supply adapter to the USB port (USB Type-C) of the transmitter.

## How to charge

**1** **Connect the transmitter and USB power supply adapter with a USB cable.**

- Insert the USB cable into the USB port in a straight (level) manner.
- When the charging starts, the status indicator lamp lights.
- You can also charge the device by connecting it to a USB port on a PC.

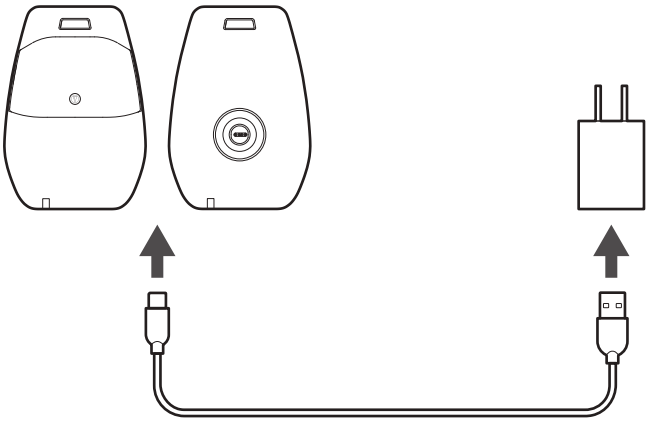

| Status indicator lamp display | Charging status |
|---|---|
| Lit in red | Charging |
| Lit in green | Charging complete |
| Flashing slowly in red | High-temperature defect |

# Linking charging stations

The ESW-CHG4 and ESW-CHG5 are network-compatible charging stations. You can link multiple instances of these charging stations for use.

## Link combinations

You can link as many charging stations as you want provided that the number of charging ports is eight or less.

- If linking these devices causes there to be more than eight ports, charging will not be performed on the charging station where this charging port limit was exceeded, and this station's power indicator lamp will light alternately in green and blue.

### Connection example where only ESW-CHG4 units are linked

You can link up to four units. Connect the AC adapter and LAN cable to the first charging station (on the left in the figure).

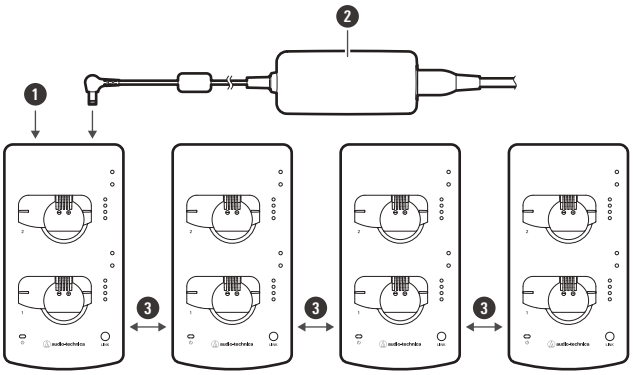

❶ LAN cable
❷ AC adapter
❸ Link cable

### Connection example where only ESW-CHG5 units are linked

You can link up to two units. Connect the AC adapter and LAN cable to the first charging station (on the left in the figure).

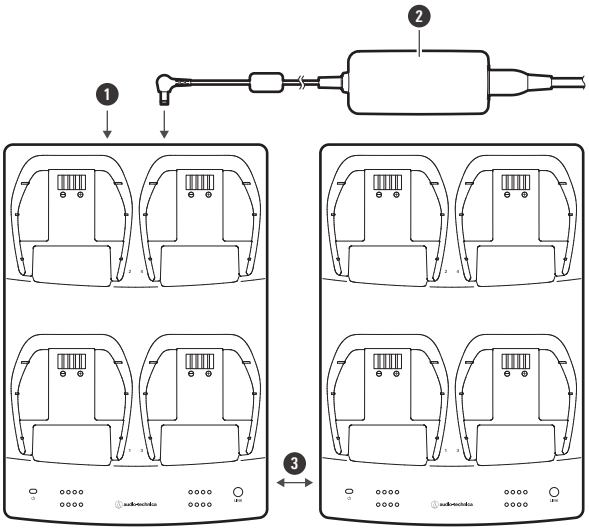

❶ LAN cable
❷ AC adapter
❸ Link cable

## Connection example where ESW-CHG4 and ESW-CHG5 units are linked

You can link up to three units (two ESW-CHG4 units and one ESW-CHG5 unit). Connect the AC adapter and LAN cable to the first charging station (on the left in the figure).

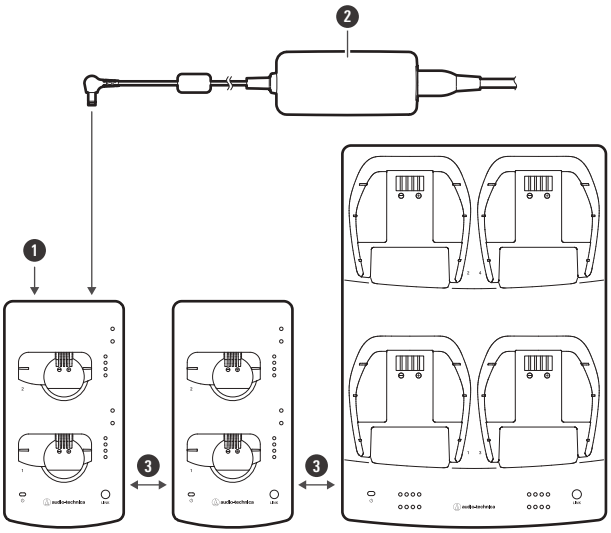

❶ LAN cable
❷ AC adapter
❸ Link cable

# How to link

## Included accessories used when linking

Use the included link kit to link charging stations.

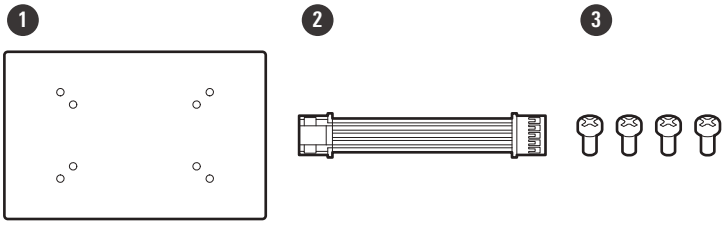


1. **Link plate**
2. **Link cable**
3. **Set of link plate screws**

## Linking two ESW-CHG4 units

**1** **Remove the caps for DC jacks, and then connect the link cable.**

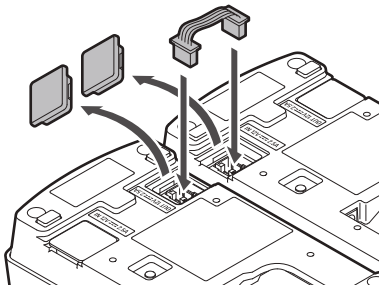

**2** **Attach the link plate with link plate screws.**

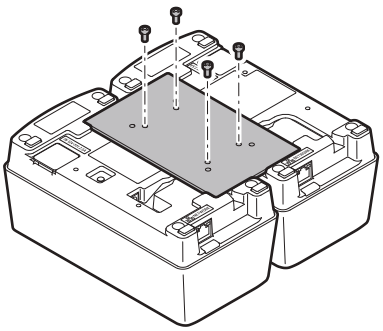

## Linking two ESW-CHG5 units

**1** **Remove the caps for DC jacks, and then connect the link cable.**

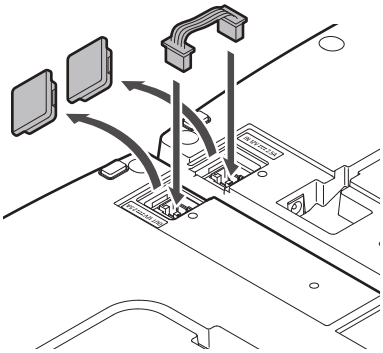

**2** **Attach the (two) link plates with link plate screws.**

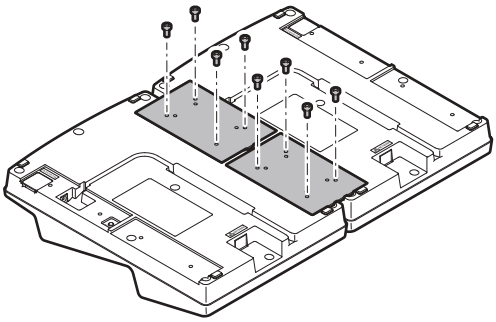

## Linking the ESW-CHG4 and ESW-CHG5

**1** **Remove the caps for DC jacks, and then connect the link cable.**

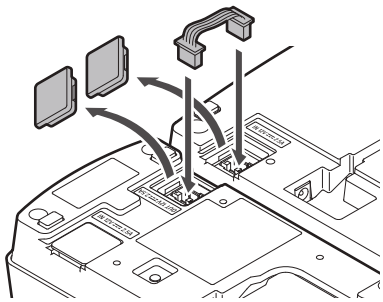

**2** **Attach the link plate with link plate screws.**

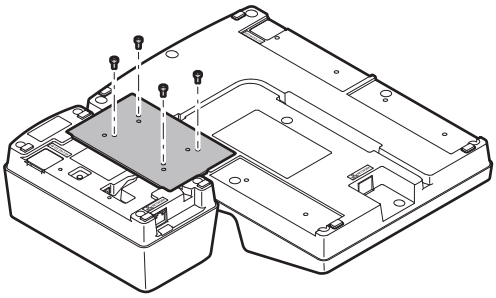

# How to use the devices

## ESW-R4180DAN

### Checking the network mode

**1** **Press the reset button with a pin that has a thin tip by inserting this pin slowly in a straight manner.**

- The status indicator lamp flashes.

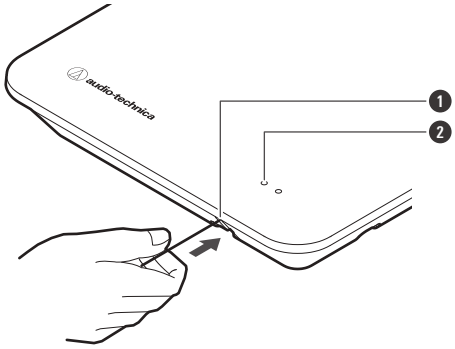


1 Reset button

2 Status indicator lamp

| Status indicator lamp display | Network mode |
|---|---|
| Flashing in green (five times) | Auto |
| Flashing in orange (five times) | Static |

### Resetting the network

The following network settings will be returned to their factory default values. This is useful in, for example, returning the network mode to “Auto” when the IP address is unknown.

- IP Setting
- Remote Control
- Syslog
- NTP Setting

**1** **Press and hold (approximately 3 seconds) the reset button with a pin that has a thin tip by inserting this pin slowly in a straight manner.**

- The status and link indicator lamps light alternately in red and orange.

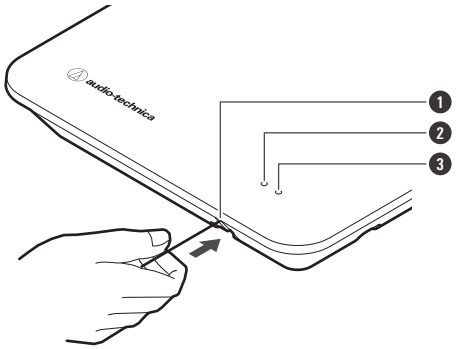


1 Reset button
2 Status indicator lamp
3 Link indicator lamp

**2 Quickly press the reset button while the status and link indicator lamps are lighting alternately.**

- If no operations are performed for approximately 5 seconds after the status and link indicator lamps start lighting alternately, the device will return to normal operation mode.

» **A network reset will be executed. After the network reset, the device will automatically restart.**

- While resetting or restarting is in progress, do not pull out the cable connected to the receiver.

## Performing a factory reset

All settings will be returned to their factory default values.

**1 Press and hold (8 seconds or more) the reset button with a pin that has a thin tip by inserting this pin slowly in a straight manner.**

- The status and link indicator lamps light alternately in green and orange.

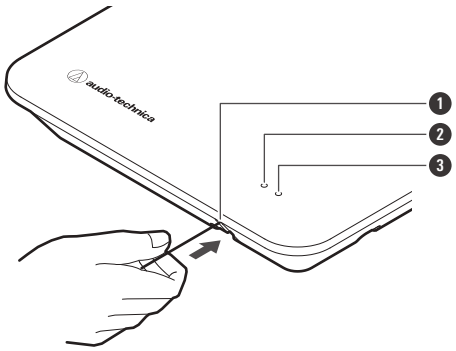


1 Reset button

❷ Status indicator lamp
❸ Link indicator lamp

**2** **Quickly press the reset button while the status and link indicator lamps are lighting alternately.**

- If no operations are performed for approximately 5 seconds after the status and link indicator lamps start lighting alternately, the device will return to normal operation mode.

» **A factory reset will be executed. After the factory reset, the device will automatically restart.**

- You can also execute factory resets from Wireless Manager.

- While resetting or restarting is in progress, do not pull out the cable connected to the receiver.

# ESW-T4101

## Turning the device on/off

**1** **With the device off, press and hold (approximately 2 seconds) the PUSH button.**

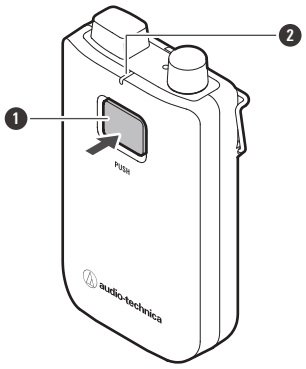


❶ PUSH button
❷ Status indicator lamp

» **The device turns on. When the link with the receiver is established, the status indicator lamp lights.**

**2** **With the power on, press and hold the PUSH button for approximately 2 seconds, and then release the button.**

» **The device turns off.**

- If the transmitter is turned on with no link configured between it and the receiver (the factory default status), the status indicator lamp of the transmitter will flash quickly in red for approximately 10 seconds before the transmitter turns off.
- If the transmitter is turned on with a link configured between it and the receiver, the transmitter will search for the link destination, and its status indicator lamp will flash in red. If this lamp continues flashing for 1 minute and the link destination cannot be found, the transmitter will automatically turn off.
- If you turn the transmitter on immediately after removing it from the charging station, it may take some time (approximately 5 seconds) before the transmitter starts.

## Switching between muted and unmuted

**1 With the device on, quickly press the PUSH button.**

- The device switches between muted and unmuted each time this button is quickly pressed.
- The status indicator lamp lights.

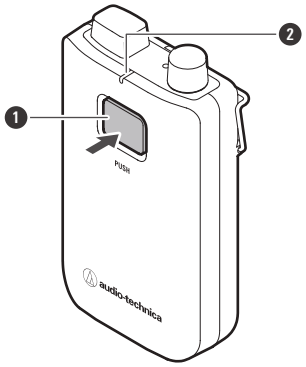


1 PUSH button
2 Status indicator lamp

| Status indicator lamp display | Operation status |
|---|---|
| Lit in red | Muted |
| Lit in green | Unmuted |

## Checking the battery level

**1 With the device on, press and hold (approximately 5 seconds) the PUSH button.**

- The status indicator lamp flashes.

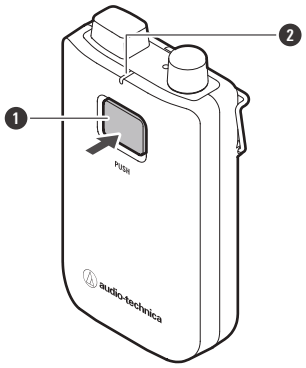


❶ PUSH button

❷ Status indicator lamp

| Status indicator lamp display | Battery level |
|---|---|
| Flashing in green (one time) | 0% to less than 25% |
| Flashing in green (two times) | 25% to less than 50% |
| Flashing in green (three times) | 50% to less than 75% |
| Flashing in green (four times) | 75% or more |

## Battery level alert

If the battery level drops too low, the status indicator lamp flashes. Charge the battery.

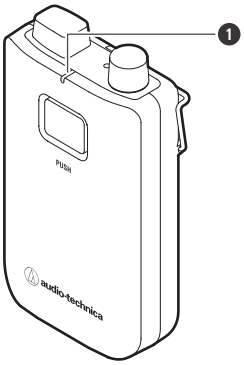


❶ Status indicator lamp

| Status indicator lamp display | Battery level alert |
|---|---|
| Flashing in orange | There is no battery power. The device will turn off within 30 minutes. [1] |
| Flashing in the color the lamp lights in when the device is muted/unmuted | The battery level is low. The device will turn off within 60/90/120 minutes. [1][2] |

[1] The time is a guideline. It varies depending on usage conditions.

[2] This function is turned off with the factory default settings. You can set the time to 60/90/120 minutes with “Battery Alert” under “Device Setting”. Refer to "Wireless Manager device settings" (p. 87) for details on “Device Setting”.

## How to attach an external microphone

Attach a cH connector-compatible external microphone.

- Guitar cables are not supported.

**1** **Remove the cap for the input connector.**

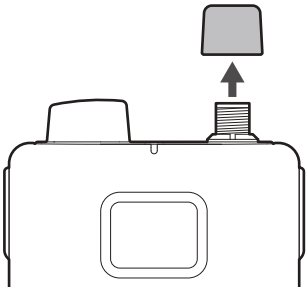

**2** **Connect the external microphone to the input connector and tighten the screw part.**

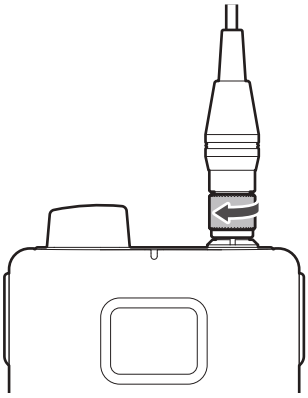

- For details on compatible microphones, contact the Professional SS Department.

## How to wear the device

You can use the clip of the body-pack transmitter to attach it to a belt or something similar when using the device.

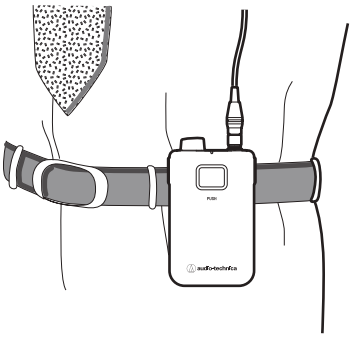


## How to mount a neck strap

You can mount the included neck strap to the strap hole or clip of the body-pack transmitter to hang the device from your neck when using it.

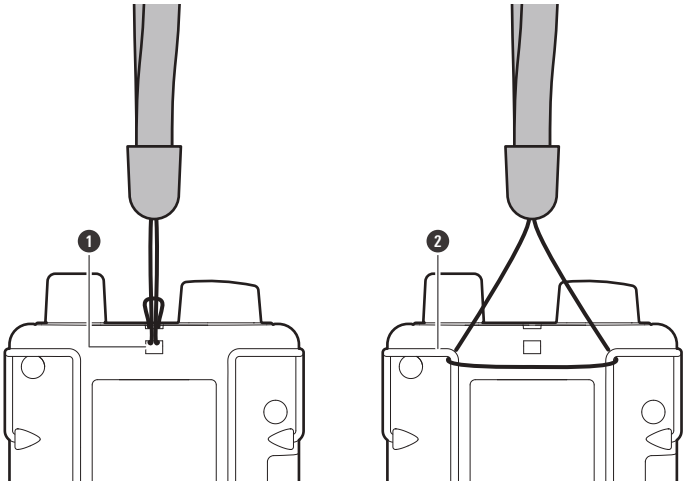


1 Strap hole
2 Clip

# ESW-T4102/C510

## Turning the device on/off

**1** **With the device off, press and hold (approximately 2 seconds) the power button.**

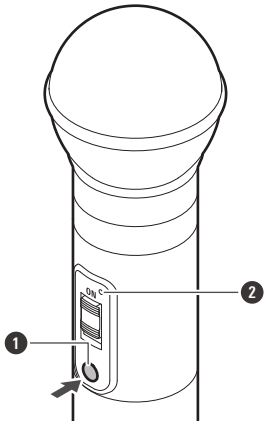


1 Power button

2 Status indicator lamp

» **The device turns on. When the link with the receiver is established, the status indicator lamp lights.**

**2** **With the device on, press and hold the power button for approximately 2 seconds, and then release the button.**

» **The device turns off.**

- If the transmitter is turned on with no link configured between it and the receiver (the factory default status), the status indicator lamp of the transmitter will flash quickly in red for approximately 10 seconds before the transmitter turns off.
- If the transmitter is turned on with a link configured between it and the receiver, the transmitter will search for the link destination, and its status indicator lamp will flash in red. If this lamp continues flashing for 1 minute and the link destination cannot be found, the transmitter will automatically turn off.
- If you turn the transmitter on immediately after removing it from the charging station, it may take some time (approximately 5 seconds) before the transmitter starts.

## Switching between muted and unmuted

**1** **Slide the mute switch.**

- Slide the mute switch down to mute the device and slide the mute switch up (ON) to unmute the device.

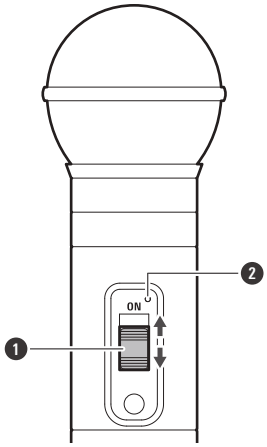


1 Mute switch
2 Status indicator lamp

| Status indicator lamp display | Operation status |
|---|---|
| Lit in red | Muted |
| Lit in green | Unmuted |

## Checking the battery level

**1 With the device on, press and hold (approximately 5 seconds) the power button.**

- The status indicator lamp flashes.

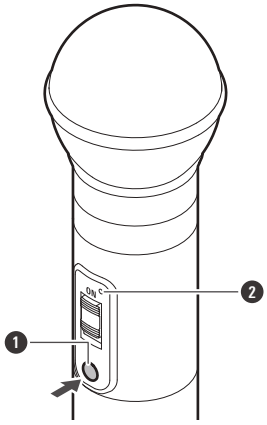


1 Power button
2 Status indicator lamp

| Status indicator lamp display | Battery level |
|---|---|
| Flashing in green (one time) | 0% to less than 25% |
| Flashing in green (two times) | 25% to less than 50% |
| Flashing in green (three times) | 50% to less than 75% |
| Flashing in green (four times) | 75% or more |

## Battery level alert

If the battery level drops too low, the status indicator lamp flashes. Charge the battery.

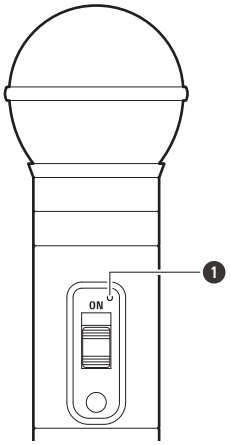


1 Status indicator lamp

| Status indicator lamp display | Battery level alert |
|---|---|
| Flashing in orange | There is no battery power. The device will turn off within 30 minutes. [1] |
| Flashing in the color the lamp lights in when the device is muted/unmuted | The battery level is low. The device will turn off within 60/90/120 minutes. [1][2] |

[1] The time is a guideline. It varies depending on usage conditions.

[2] This function is turned off with the factory default settings. You can set the time to 60/90/120 minutes with “Battery Alert” under “Device Setting”. Refer to "Wireless Manager device settings" (p. 87) for details on “Device Setting”.

## How to remove the microphone capsule

**1 Rotate the microphone capsule counterclockwise to remove it.**

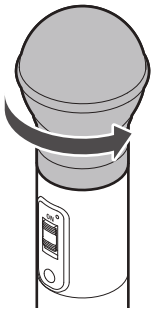

- Do not directly touch or scratch the connection surface between the microphone capsule and the handheld transmitter.
- Be sure to turn off the handheld transmitter before removing the microphone capsule.
- Do not forcibly tighten the microphone capsule when attaching it. Doing so may damage the handheld transmitter or microphone capsule.

# ESW-T4106/ESW-T4107

## Turning the device on/off

**1** **With the device off, press and hold (approximately 2 seconds) the power button.**

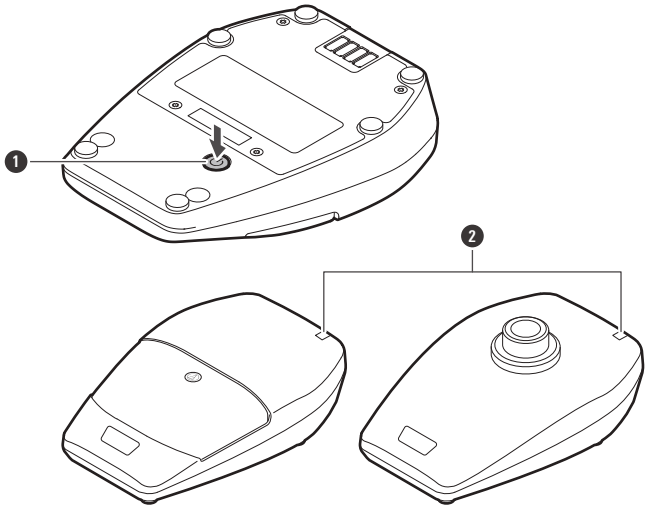


1 Power button

2 Status indicator lamp

» **The device turns on. When the link with the receiver is established, the status indicator lamp lights.**

**2** **With the device on, press and hold the power button for approximately 2 seconds, and then release the button.**

» **The device turns off.**

- If the transmitter is turned on with no link configured between it and the receiver (the factory default status), the status indicator lamp of the transmitter will flash quickly in red for approximately 10 seconds before the transmitter turns off.
- If the transmitter is turned on with a link configured between it and the receiver, the transmitter will search for the link destination, and its status indicator lamp will flash in red. If this lamp continues flashing for 1 minute and the link destination cannot be found, the transmitter will automatically turn off.
- If you turn the transmitter on immediately after removing it from the charging station, it may take some time (approximately 5 seconds) before the transmitter starts.

## Switching between muted and unmuted

**1** **Quickly press the talk switch.**

- The device switches between muted and unmuted each time this button is quickly pressed.
- You can change this setting with “Mute Mode” under “Device Setting”. Refer to "Wireless Manager device settings" (p. 87) for details on “Device Setting”.
- The talk indicator lamp and the status indicator lamp light.

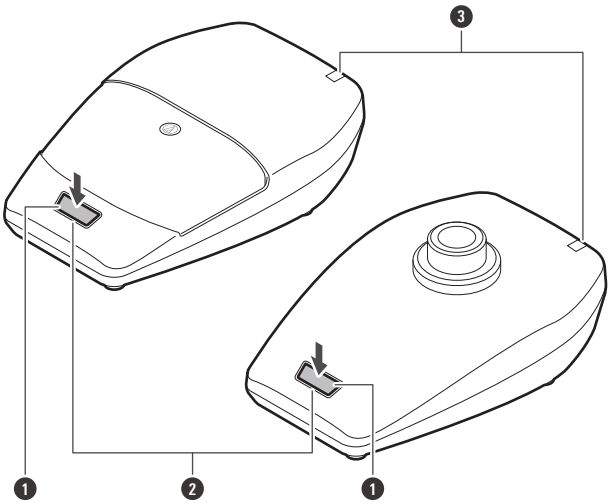


1 Talk switch
2 Talk indicator lamp
3 Status indicator lamp

| Indicator lamp display | Operation status |
|---|---|
| Lit in red | Muted |
| Lit in green | Unmuted |

- You can change the display color with “Mute LED Color” or “Unmute LED Color” under “Device Setting”. Refer to "Wireless Manager device settings" (p. 87) for details on “Device Setting”.

## Checking the battery level

**1 With the device on, press and hold (approximately 5 seconds) the power button.**

- The status indicator lamp flashes.

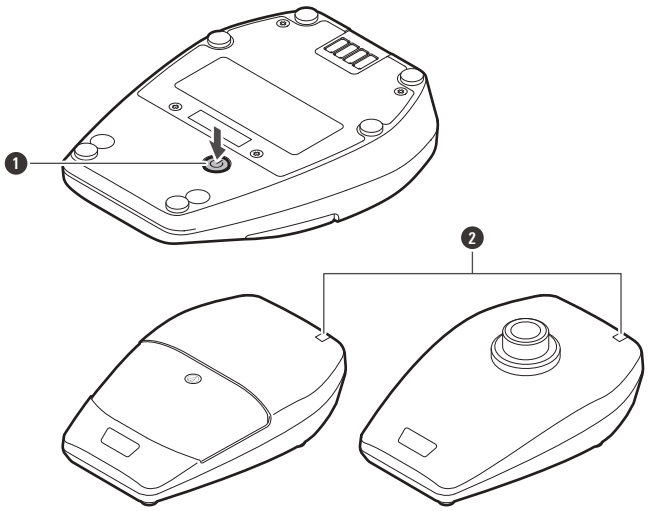


1 Power button

2 Status indicator lamp

| Status indicator lamp display | Battery level |
|---|---|
| Flashing in green (one time) | 0% to less than 25% |
| Flashing in green (two times) | 25% to less than 50% |
| Flashing in green (three times) | 50% to less than 75% |
| Flashing in green (four times) | 75% or more |

## Battery level alert

If the battery level drops too low, the status indicator lamp flashes. Charge the battery.

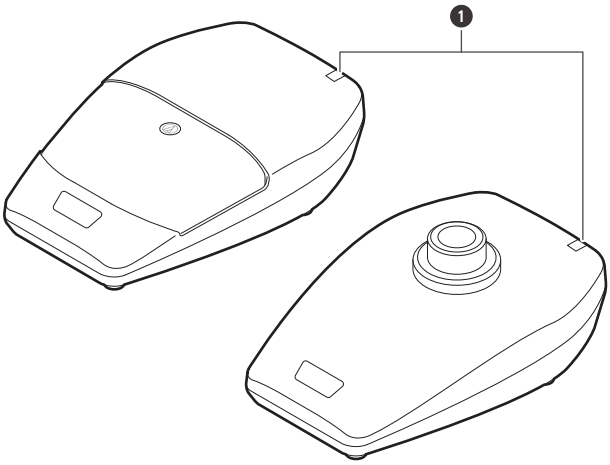


1 Status indicator lamp

| Status indicator lamp display | Battery level alert |
|---|---|
| Flashing in orange | There is no battery power. The device will turn off within 30 minutes. [1] |
| Flashing in the color the lamp lights in when the device is muted/unmuted | The battery level is low. The device will turn off within 60/90/120 minutes. [1][2] |

[1] The time is a guideline. It varies depending on usage conditions.

[2] This function is turned off with the factory default settings. You can set the time to 60/90/120 minutes with “Battery Alert” under “Device Setting”. Refer to "Wireless Manager device settings" (p. 87) for details on “Device Setting”.

## Checking the directionality of the microphone (ESW-T4106 only)

**1 Quickly press the power button.**

- The status indicator lamp flashes.

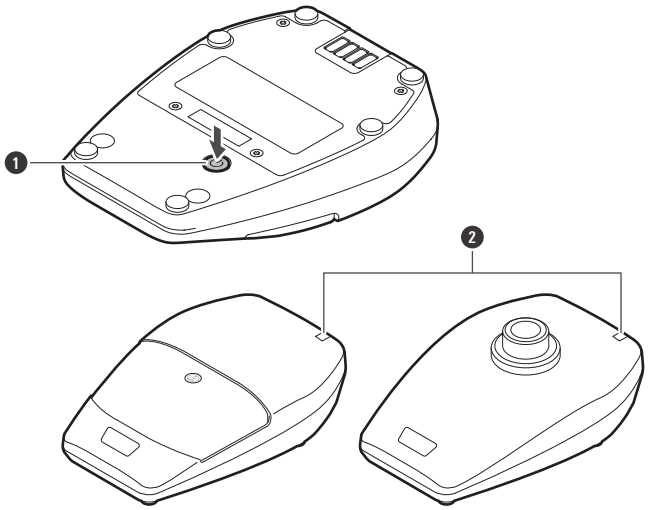


1 Power button

❷ Status indicator lamp

| Status indicator lamp display | Directionality of the microphone |
|---|---|
| Flashing in blue (three times) | Unidirectional |
| Flashing in white (three times) | Omnidirectional |

- You can change this setting with “Polar Pattern” under “Device Setting”. Refer to "Wireless Manager device settings" (p. 87) for details on “Device Setting”.

## How to attach a gooseneck microphone (ESW-T4107 only)

To use a gooseneck microphone, attach it to a desk stand transmitter.

**1 Rotate the gooseneck microphone clockwise while inserting it into the desk stand transmitter.**

- Tighten until the gooseneck microphone stops turning.

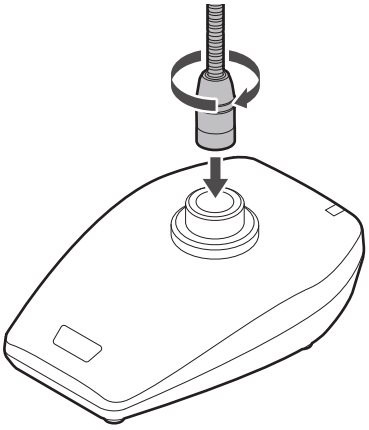

**2 Use a hexagonal wrench to tighten the fixing screw, fixing the gooseneck microphone in place on the desk stand transmitter.**

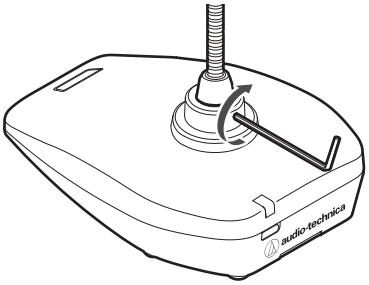


- Refer to the user manual of the gooseneck microphone for details on how to assemble and handle the gooseneck microphone.
- For details on compatible gooseneck microphones, contact the Professional SS Department.

# ESW-CHG4/ESW-CHG5

## Checking the network mode

**1 Quickly press the reset button.**

- The power indicator lamp flashes.

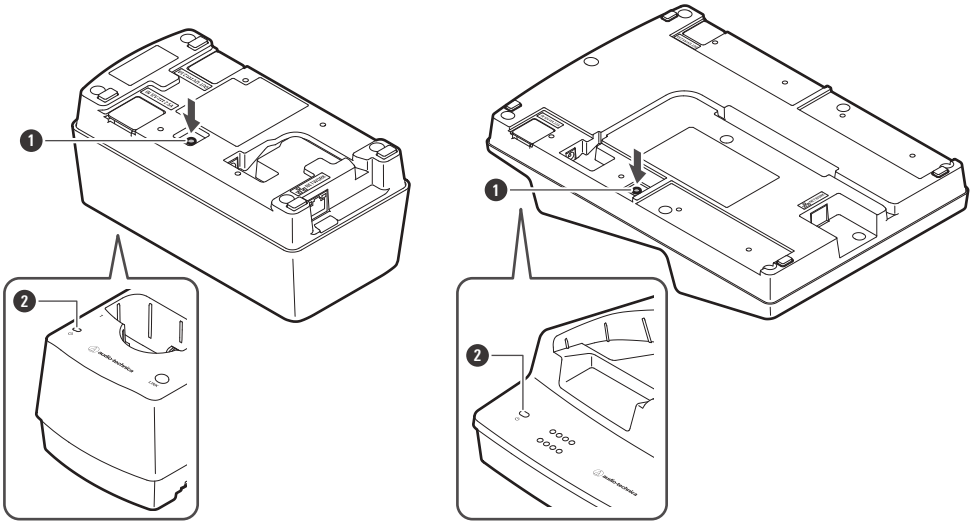

❶ Reset button

❷ Power indicator lamp

| Power indicator lamp display | Network mode |
|---|---|
| Flashing in green (five times) | Auto |
| Flashing in cyan (five times) | Static |

## Resetting the network

The following network settings will be returned to their factory default values. This is useful in, for example, returning the network mode to “Auto” when the IP address is unknown.

- IP Setting
- Remote Control
- Syslog
- NTP Setting

**1 Press and hold the reset button for approximately 3 seconds, and then release the button.**

- The power indicator lamp lights alternately in blue and cyan.

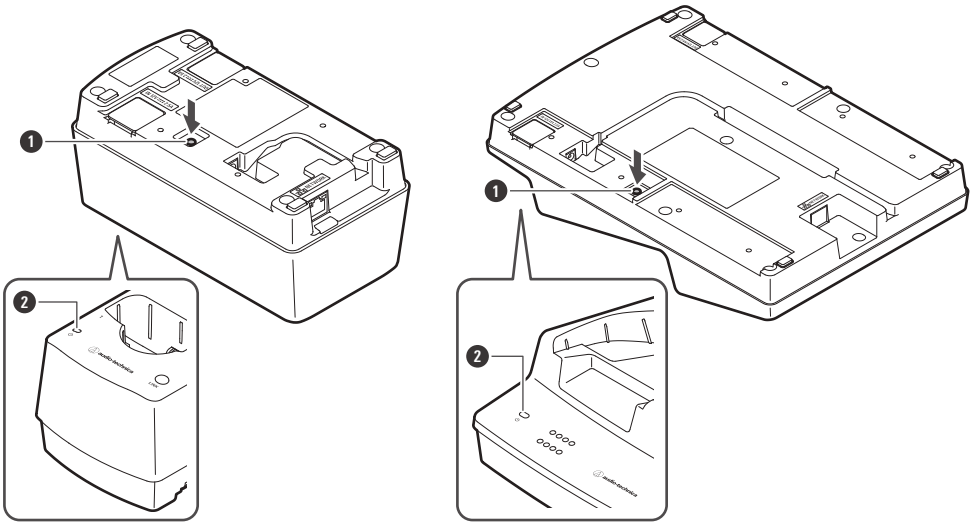

❶ Reset button

❷ Power indicator lamp

**2** **Quickly press the reset button while the power indicator lamp is lighting alternately in these colors.**

- If no operations are performed for approximately 5 seconds after the power indicator lamp starts lighting alternately, the device will return to normal operation mode.

» **A network reset will be executed. After the network reset, the device will automatically restart.**

- While resetting or restarting is in progress, do not pull out the cable connected to the charging station.

## Performing a factory reset

All settings will be returned to their factory default values.

**1** **Press and hold (8 seconds or more) the reset button.**

- The power indicator lamp lights alternately in green and cyan.

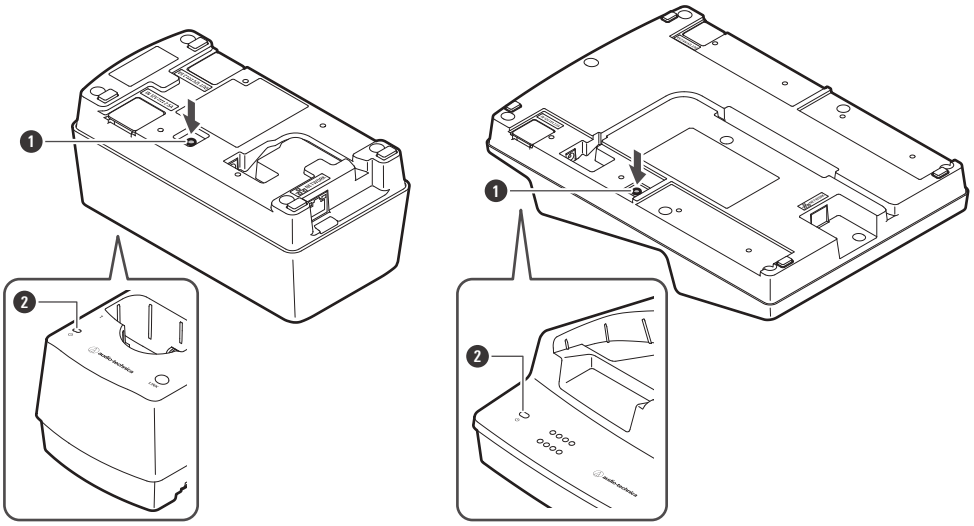

❶ Reset button

❷ Power indicator lamp

**2** **Quickly press the reset button while the power indicator lamp is lighting alternately in these colors.**

- If no operations are performed for approximately 5 seconds after the power indicator lamp starts lighting alternately, the device will return to normal operation mode.

» **A factory reset will be executed. After the factory reset, the device will automatically restart.**

- You can also execute factory resets from Wireless Manager.

- While resetting or restarting is in progress, do not pull out the cable connected to the charging station.

## Switching to power-saving mode

You can use this device in power-saving mode, which lowers the current consumption.

- The device does not connect to the network in this mode, so it is not possible to update the firmware, check the network mode, reset the device, and perform similar operations.
- To lower the current consumption, the power and status indicator lamps are darker than in the normal mode.
- In power-saving mode, the status indicator lamp turns off when the transmitter is fully charged.
- In power-saving mode, it may take some time (approximately 10 seconds) before the charging of the transmitter starts. You can start this charging immediately by quickly pressing the LINK button.

**1** **Check that the charging station is not connected to the network.**

- When it is not connected to the network, the charging station's power indicator lamp lights in blue.

**2** **Press and hold (approximately 3 seconds) the LINK button and the reset button at the same time.**

**3** **When the power indicator lamp flashes, release these buttons.**

» **The device switches to power-saving mode.**

- Removing the AC adapter and attaching it again cancels the power-saving mode.

# Transmitter links

In this user manual, a wireless connection between a receiver and a transmitter is referred to as a “link”.

- You have to configure the link in advance in Wireless Manager. Refer to "Configuring links to devices" (p. 75) for details.

## How to link a receiver and transmitter

**1** **Remove the transmitter from the charging station.**

**2** **Press and hold the power button on the transmitter (the PUSH button for the ESW-T4101) for approximately 2 seconds, and then release the button.**

- If you insert a transmitter that is on into the charging station, the transmitter will automatically turn on when you remove it from the charging station.
- If you turn the transmitter on immediately after removing it from the charging station, it may take some time (approximately 5 seconds) before the transmitter starts.

» **The transmitter turns on and automatically searches for the link destination. When the link is established, the link indicator lamp on the receiver and the status indicator lamp on the transmitter light.**

# Wireless Manager

## What is Wireless Manager?

It is a software application that is required when configuring the settings of this system. You can use it to not only connect to a device and configure the link and device settings but also to create settings in advance in an offline manner and apply these settings to an online device. You can also scan the RF environment, monitor connected devices, and view the system log.

- Dante settings cannot be configured from Wireless Manager.

## Recommended environment

Wireless Manager is designed for use with a PC. It cannot be used with a tablet or smartphone. Visit our website for the latest information on compatible OS.

| Item name | Details |
|---|---|
| Compatible OS | Microsoft Windows 10 64 bit<br>Microsoft Windows 11 64 bit<br>macOS Catalina (Version 10.15)<br>macOS Big Sur (Version 11) |
| Installation size | 210 MB |
| Display resolution | 1920 × 1080 or higher |
| CPU | Intel® Core™ i5, i7 or higher |
| Memory | 4 GB or more (8 GB or more recommended if operating multiple devices) |

- Before using Wireless Manager, be sure to update the device firmware to the latest version.

## Installing Wireless Manager

### For Windows

**1 Download the Wireless Manager installer onto your Windows PC.**

- From our company website (https://www.audio-technica.com/), select your country or region, and then download the program from the corresponding website.

**2 Open the downloaded Zip file, and double-click the "WirelessManagerInstaller_vXXX_XXbit.exe" file.**

**» The Setup Wizard will appear on the screen.**

**3** **Follow the instructions on the screen to install Wireless Manager.**

» **Once the installation is complete, the Wireless Manager shortcut will appear on the screen.**

## For Mac

**1** **Download the Wireless Manager installer onto your Mac.**

- From our company website (https://www.audio-technica.com/), select your country or region, and then download the program from the corresponding website.

**2** **Open the downloaded file (WirelessManagerInstaller_vXXX.dmg).**

**3** **Launch the installer (WirelessManagerInstaller_vXXX.pkg).**

» **The Setup Wizard will appear on the screen.**

**4** **Follow the instructions on the screen to install Wireless Manager.**

» **This software will be installed in the Applications folder.**

# Connecting Wireless Manager to devices

## How to connect to devices

**1** **Set the firewall on the PC.**

**2** **Configure the network settings of the PC and the device.**

**3** **Connect the device and the PC on which Wireless Manager is installed.**

**4** **Start Wireless Manager.**

- The “Unsynced Devices” screen is automatically displayed when a compatible device is detected. Refer to "Wireless Manager basic use" (p. 73) for details.

- A confirmation screen asking to allow communication during setup may be displayed depending on the operating system and security software. In such cases, allow communication.

## If you cannot connect with the device

If you cannot connect with the device, check the following:

- Wireless Manager may not work properly due to the firewall or the security software firewall of the PC being used. In this case, check the firewall settings and authorize communication with Wireless Manager.
- Wireless Manager uses IP multicast. Make sure that your multicast IP address/port number is not blocked in your network environment.

## About firewall settings (example: Windows 10)

**1** **Click “Windows Security” from the Start menu.**

**2** **Click “Firewall & network protection”.**

**3** **Click “Allow an app through firewall”.**

**4** **Check whether the check boxes for the domain, private, and public items of “Wireless Manager” are all selected.**

- Select the check boxes for any items that are not selected.

**5** **Click “OK”.**

- If “Wireless Manager” is not listed, click “Allow another app” to add “Wireless Manager”. If it does not appear in the list, you need to specify a location. Specify a file in the following location:
  C:\Program Files\Audio-Technica\Wireless Manager
  File name: WirelessManager.exe

## About firewall settings (example: Mac)

**1** **Click “System Preferences” from the Dock or Applications folder.**

**2** **Click “Security & Privacy”, and then click the “Firewall” tab.**

- You may be asked to enter your password before making changes. In this case, click the lock, and then enter your password.

**3** **Click “Firewall Options”.**

**4** **Check whether Wireless Manager is authorized to communicate through the firewall.**

- If “Wireless Manager” is not displayed, click the “+” button under the list.

**5** **From the applications list, select “Wireless Manager”, and then click “Add”.**

» **The color of the “Wireless Manager” indicator lamp in the list changes to green, and the connection is authorized.**

## Network settings

With the factory default setting, the IP addresses of the receiver and charging station are set to “Auto”, so devices are connected with IP addresses acquired automatically. To connect with static IP addresses, perform the following operations.

### Using devices with static IP addresses

**1** **Configure the PC so that its IP address setting is acquired automatically, and then connect this PC to the network over Ethernet.**

**2** **Start Wireless Manager.**

**3** **Connect the devices and the PC on which Wireless Manager is installed.**

**4** **Set each item under “Device Setting” -> “Network” -> “IP Setting” in Wireless Manager.**

- Set “Mode” to “Static”.
- Assign a unique IP address to each device.
- Assign a specific subnet mask to all the devices.
- Check that the IP addresses of the devices meet the IPv4 setting standard.

» **After the settings are changed, a message appears, and the devices are automatically restarted.**

**5** **Change the PC to a static IP address, and then assign this IP address and the subnet mask.**

**6** **Start Wireless Manager again.**

# How to read main Wireless Manager screens

You can click the tabs to switch between screens.

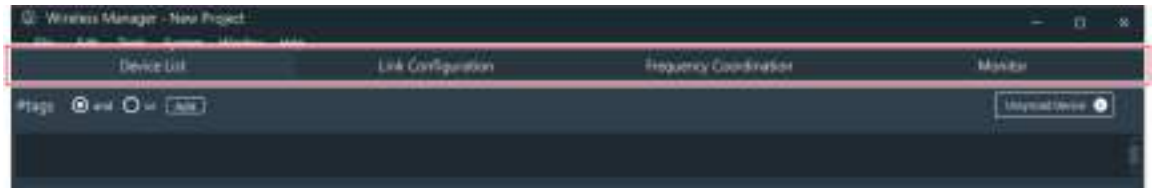


- The “Frequency Coordination” screen is not used with this system.

## “Device List” screen

Use this screen to create the device list and to configure device settings. With an online connection, you can synchronize setting values via synchronization with devices.

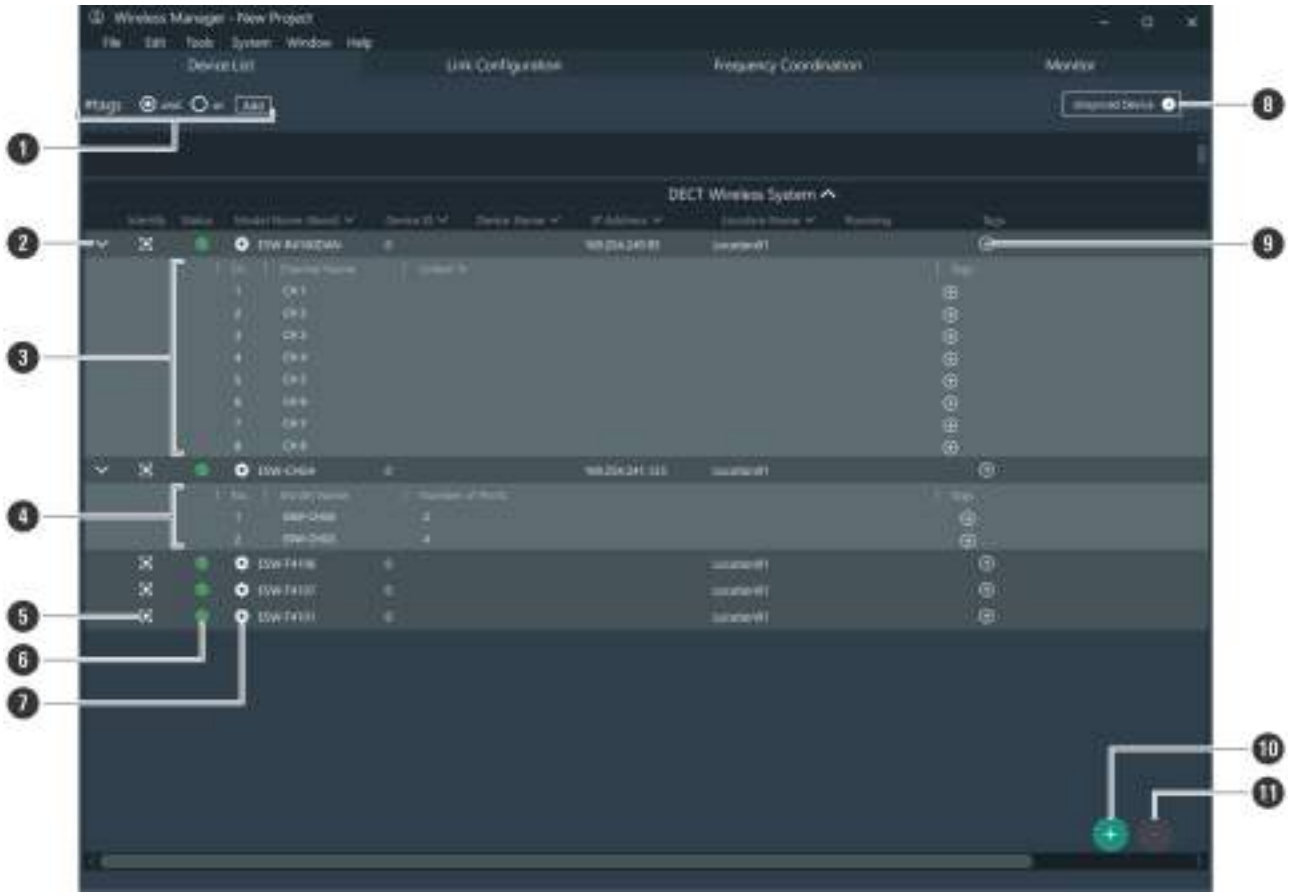


**1 Tags**

You can create tags. The tags can be added to the devices and channels and used to filter device lists.
and: The list is filtered to include devices and channels with all of the selected tags.
or: The list is filtered to include devices and channels with any of the selected tags.

**❷ Device information switch**

Click the icon to open and close information on the devices.

**❸ Device information (receivers)**

Displays information on receiver devices.
Ch: Displays the channel numbers.
Channel Name: Displays the channel names. You can click here to edit.
Linked Tx: Displays the transmitter linked to each channel.
Tags: You can assign created tags to each channel.

**❹ Device information (charging stations)**

Displays information on charging station devices.
Model Name: Displays the model name.
Number of Ports: Displays the number of charging ports.
Tags: You can assign created tags.

**❺ Device identifier**

Identifies connected devices. Click the icon to make the indicator lamp of the corresponding device flash.

**❻ Status**

Displays the synchronization status of the connected device.
: The device and Wireless Manager are not synchronized.
: The device and Wireless Manager are synchronized.
: The transmitter is linked to a receiver.
: A communication error has occurred. Right-click the icon and click “Resend setting to device”. The Wireless Manager settings are applied to the device.
: The link configuration was changed while the transmitter was removed from the charging station. Inserting the transmitter into the charging station will update the link.

**❼ Device settings**

Click the icon to configure the device settings. Refer to "Wireless Manager device settings" (p. 87) for details.

**❽ Unsynced Devices**

Among all the connected devices that are recognizable as online, displays those devices that are not synchronized in the device list.

**❾ Tags**

You can assign created tags to devices.

**❿ Add (+) button**

Click the button to add a device to the device list. Refer to "Creating a device list" (p. 73) for details.

**⓫ Delete (–) button**

Click the button to delete the selected device.

# “Link Configuration” screen

Use this screen to configure device links for each system. You can also set the mix out and the charging station port assignments as well as switch to roaming mode.

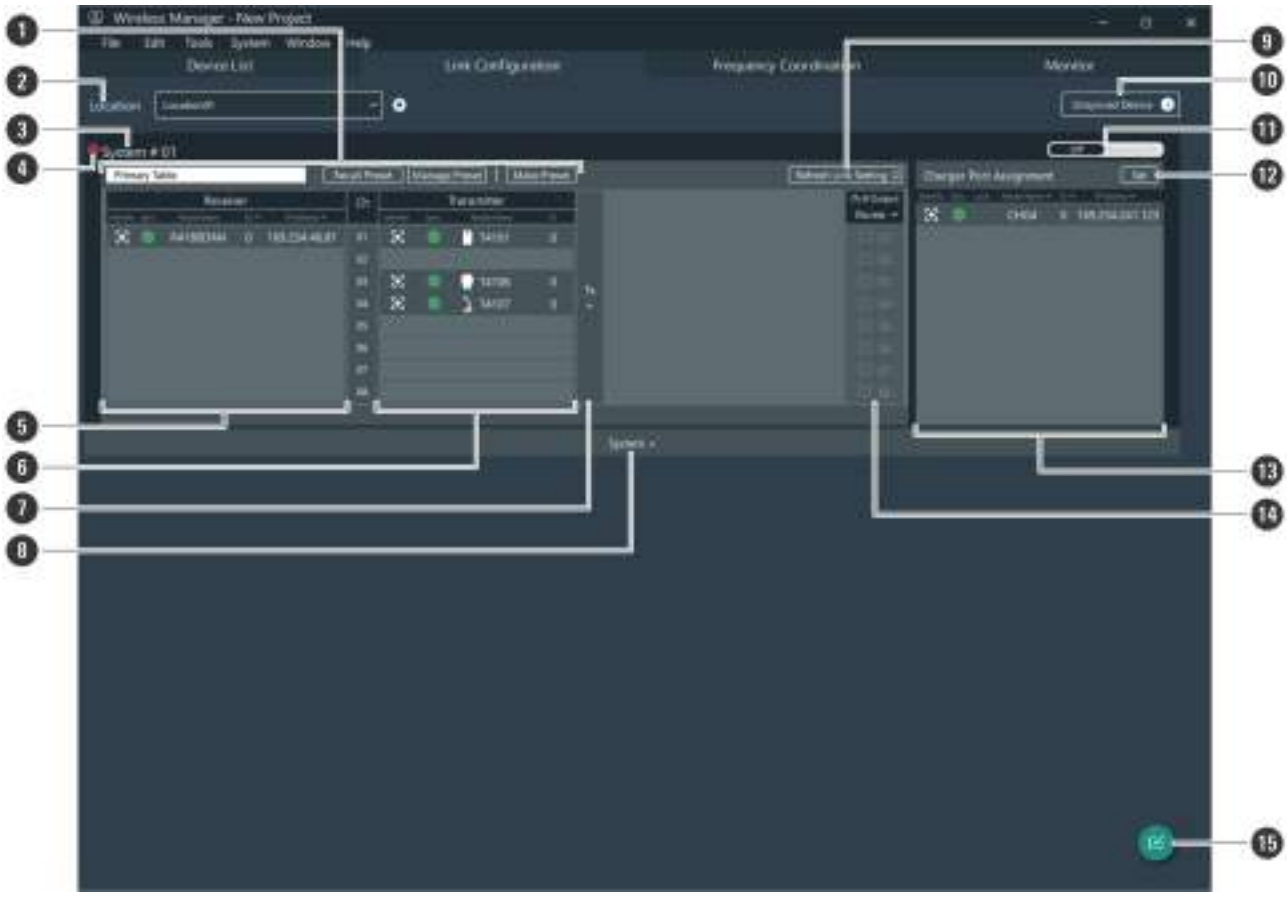


**1 Preset**

Displays the applied preset. You can also recall, manage, create, and edit presets. Refer to "Presets" (p. 100) for details.

**2 Location**

As necessary, set the name of the location where this system is installed. Refer to "Setting the location name" (p. 109) for details.

**3 System**

Configure links for each system.

**4 Delete (–) button**

Click the button to delete the system.

**5 Receiver area**

Use this area to register receivers.

**6 Transmitter area**

Use this area to register transmitters.

**7 Add area button**

Click the button to add a transmitter area.

**8 Add system button**

Click the button to add a system.

**❾ Refresh Link Setting**

Updates the receiver and transmitter link configuration. If a link is not established properly, clicking this button may solve the problem.

**❿ Unsynced Device**

Among all the connected devices that are recognizable as online, displays those devices that are not synchronized in the device list.

**⓫ Off/Roaming On**

Click the icon to switch to roaming mode. Refer to "Roaming mode" (p. 105) for details.

**⓬ Settings**

Set the charging station port assignments. Refer to "Setting charging station port assignments" (p. 110) for details.

**⓭ Charging station area**

Use this area to register charging stations.

**⓮ Ch.8 Output**

Sets the mix out. Refer to "Setting the mix out" (p. 78) for details. If you will not use the mix out, set this to “Discrete”.

**⓯ Import button**

Configures links to devices from a created device list. Refer to "Configuring links to devices added to a device list" (p. 76) for details.

# “Monitor” screen

Use this screen to monitor the channel names, reception levels, and audio output levels. Information such as the transmitter battery levels is also displayed. The charging status of transmitters inserted in charging stations is also displayed.

## How to read main Wireless Manager screens

❶ **Screen selection tabs**

Click these tabs to switch between the screens.
“User Defined”: Monitors a device selected from the device list.
“Online Device(s)”: Monitors only an online device from the device list.

❷ **pages**

You can switch between monitor pages created on the “Monitor Settings” screen.

❸ **sort**

Arranges the display of the channels in the selected order.

❹ **Tags**

You can create tags. The tags can be added to the devices and channels and used to filter device lists.
and: The list is filtered to include devices and channels with all of the selected tags.
or: The list is filtered to include devices and channels with any of the selected tags.

❺ **Group**

With multiple channels selected, click this button to group the channels together. Refer to "Grouping monitors together" (p. 84) for details.

❻ **Monitor settings**

Click the icon to configure the monitor settings. Refer to "Configuring monitor settings" (p. 85) for details.

❼ **Log**

Displays the log of connected devices.

**8 Monitor**

Displays the status of each channel. You can drag the channels to change their layout. Refer to "Monitoring devices" (p. 80) for details.

**9 Import button**

Click the icon to add a channel to monitor. Refer to "Adding a monitor" (p. 80) for details.

**10 Delete (–) button**

Click the button to delete the selected channel.

# Wireless Manager workflow

This section explains the basic workflows in online and offline environments.

| Network status | Description |
|---|---|
| Online environment | The PC and the devices are connected to the same network.<br>You can easily create device lists and configure links from devices detected on the network. You can also monitor and apply settings to devices. |
| Offline environment | The PC and the devices are not connected to the same network.<br>You can create device lists and configure links. |

## Online use

Refer to "How to connect to devices" (p. 62) and set the PC and the devices in advance.

### Creating a device list

In an online environment, create the device list from the “Unsynced Devices” screen.

1. **Create the device list from “Unsynced Device” (“Device List” screen).**
2. **Configure links from the device list (“Link Configuration” screen).**
3. **Monitor the devices (“Monitor” screen).**

### Configuring links directly without creating a device list

In an online environment, configure the link from the “Unsynced Devices” screen.

1. **Configure links from “Unsynced Device” (“Link Configuration” screen).**
2. **Monitor the devices (“Monitor” screen).**

## Offline use

Create device lists and configure links in advance in an offline environment, and then apply these settings to devices in an online environment.

## Wireless Manager workflow

1. **Create the device list from “Add Device” (“Device List” screen).**
2. **Configure links from the device list (“Link Configuration” screen).**
3. **In an online environment, apply the settings to connected devices.**
4. **Monitor the devices (“Monitor” screen).**

# Creating a device list

## Creating a device list from “Unsynced Device”

**1** **Click “Unsynced Device” on the “Device List” screen.**

- The “Unsynced Devices” screen is automatically displayed when a connected device is detected in an online environment. Among all the connected devices that are recognizable as online, this screen displays those devices that are not synchronized in the device list.

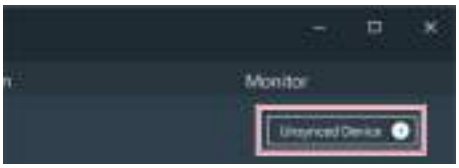


**2** **Select the device to add, and then drag it to the “Device List” screen.**

- You can click the update button to update the display of the devices on the same network.
- Click “Restore” to read the device information and apply it to Wireless Manager. Perform this operation with no devices added to the device list.

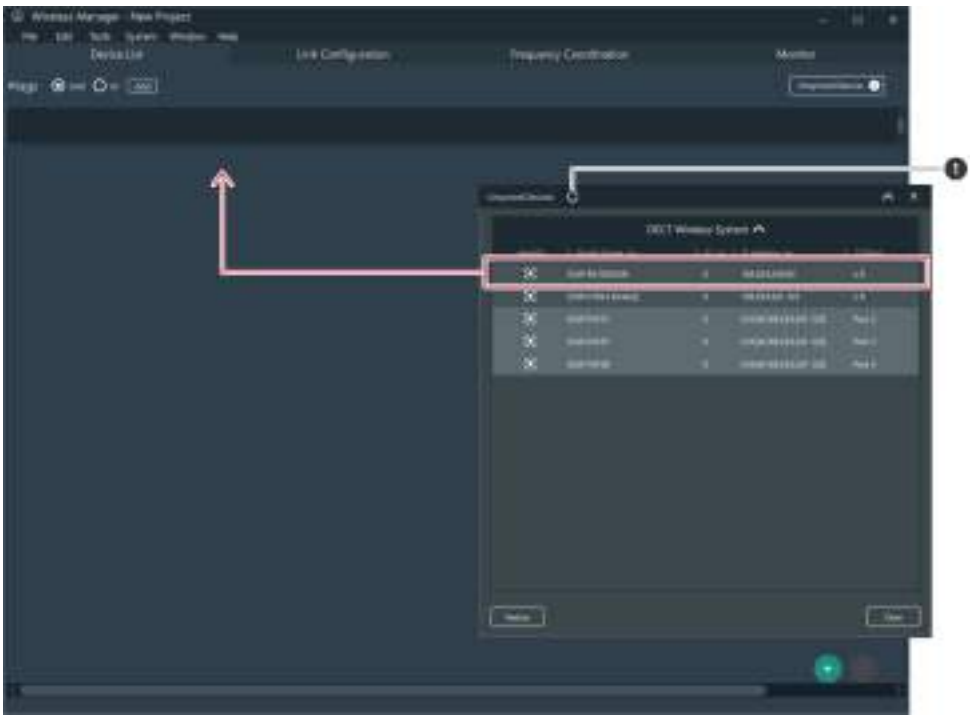


❶ Update button

» **The selected device is added to the “Device List” screen.**

**3** **Click “Close” on the “Unsynced Devices” screen to close the screen.**

## Creating a device list from “Add Device”

**1** **Click the add (+) button on the “Device List” screen.**

**2** **Click “DECT” to switch the display.**

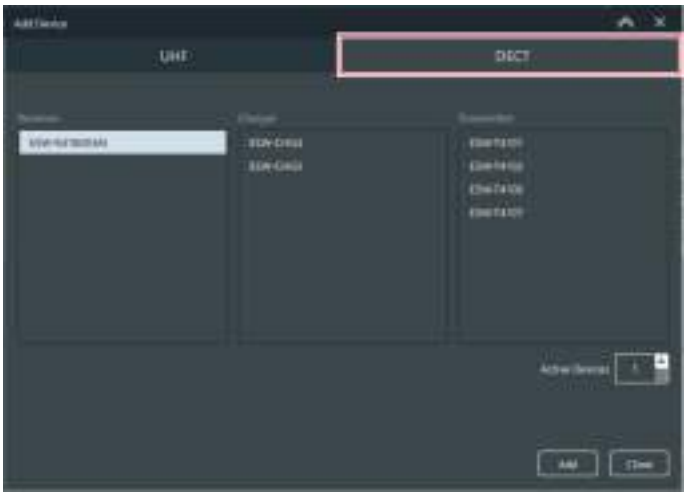


**3** **From the “Receiver”, “Charger”, and “Transmitter” columns, select the devices to add to the device list, and then enter the “Active Devices” value.**

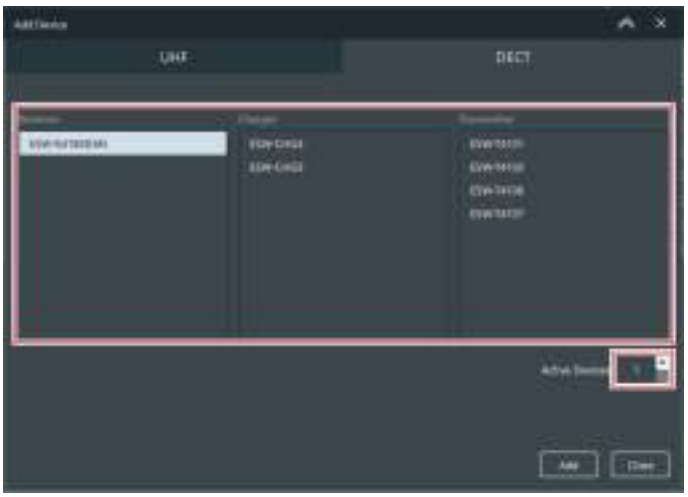


**4** **Click “Add”.**

» **The selected devices are added to the "Device List" screen.**

**5** **Click "Close" to close the "Add Device" screen.**

# Configuring links to devices

On the "Link Configuration" screen, register a receiver and transmitter in the same system. If you register a charging station, you can set the port assignment of the LINK button.

## Configure links from "Unsynced Device"

**1** **Click "Unsynced Device" on the "Link Configuration" screen.**

- The "Unsynced Devices" screen is automatically displayed when a connected device is detected in an online environment. Among all the connected devices that are recognizable as online, this screen displays those devices that are not synchronized in the device list.

**2** **Select the device whose link will be configured, and then drag this device to the appropriate area on the "Link Configuration" screen.**

- You can click the update button to update the display of the devices on the same network.
- You cannot register the same device multiple times.

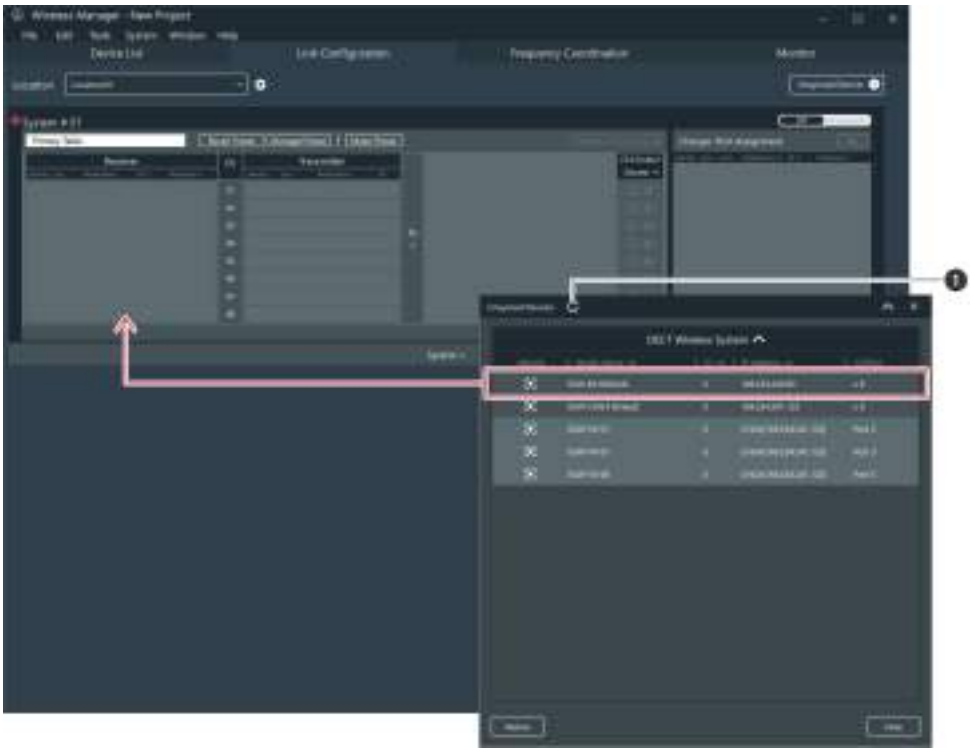

❶ Update button

» **The link to the device is configured.**

**3** **Click "Close" on the "Unsynced Devices" screen to close the screen.**

- When you configure a link from "Unsynced Device", the device is also added to the device list.
- After configuring a link to a transmitter, you can reconfigure its link to a different channel by dragging the transmitter there.
- Right-click a device whose link has been configured and click "Remove from combination" to remove the link configuration (the device will not be deleted from the device list).

- Do not remove transmitters while the screen indicating that processing is in progress is displayed.
- Before editing a link configuration, be sure to place the transmitter in an online charging station, ensuring that the link information of the receiver and transmitter is updated simultaneously. Failing to do so may lead to mismatched encryption keys, preventing normal linking.

## Configuring links to devices added to a device list

**1** **Click the import button on the "Link Configuration" screen.**

**2** **Select the device to register, and then drag this device to the appropriate area on the "Link Configuration" screen.**

- You can filter the "Device List" with the "Tags" and "Device Type" items.
- You cannot register the same device multiple times.

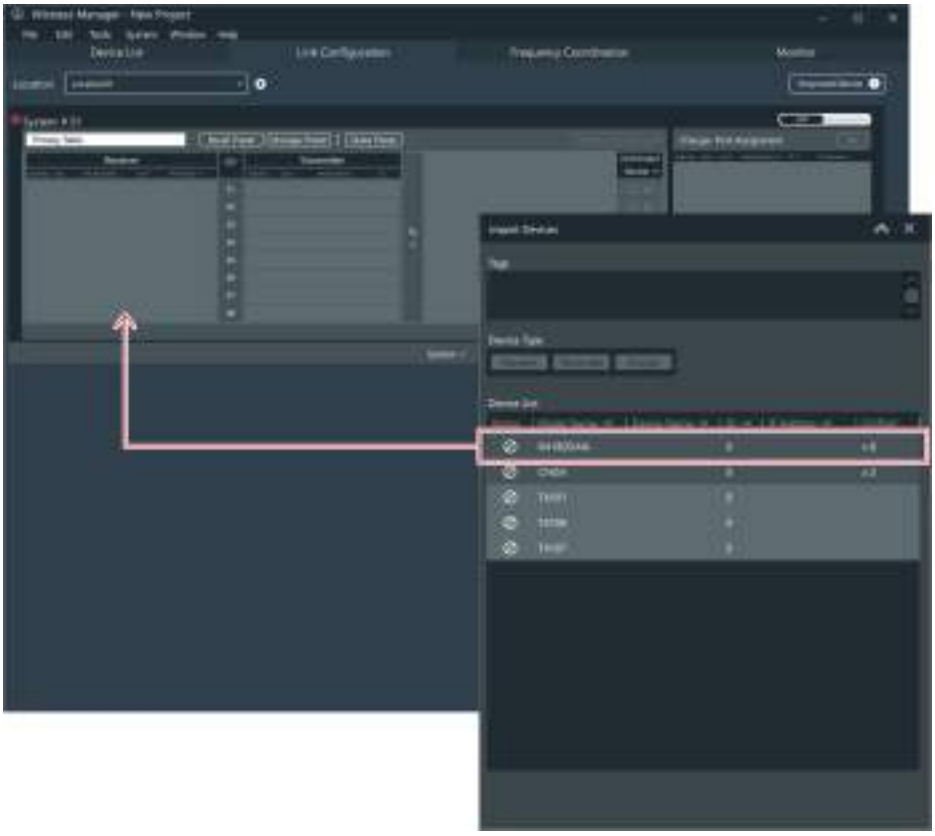

» **The link to the device is configured.**

**3** **Close the "Import Devices" screen by clicking the part indicated with the red frame.**

- After configuring a link to a transmitter, you can reconfigure its link to a different channel by dragging the transmitter there.
- Right-click a device whose link has been configured and click “Remove from combination” to remove the link configuration (the device will not be deleted from the device list).

- Do not remove transmitters while the screen indicating that processing is in progress is displayed.
- Before editing a link configuration, be sure to place the transmitter in an online charging station, ensuring that the link information of the receiver and transmitter is updated simultaneously. Failing to do so may lead to mismatched encryption keys, preventing normal linking.

## Setting the mix out

The audio output from ch. 8 varies depending on whether “Mix Out” or “Discrete” is selected. If you select “Mix Out”, the audio of the channels selected from ch. 1 to ch. 8 is mixed and output. If you select “Discrete”, the audio of ch. 8 is output.

**1** **Click the part indicated with the red frame on the “Link Configuration” screen.**

**2** **From the list, click “Mix Out”.**

**3** **Select the check boxes to select the channels to set for the mix out.**

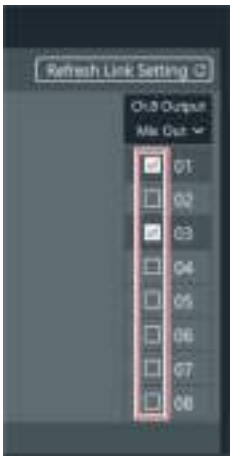


- Even if you select Mix Out, ch. 1 to ch. 7 will be output individually.

## Applying settings to online connected devices

Once you have created a device list and configured links in an offline environment, you need to apply these settings to online connected devices in the actual operational environment.

- The “Unsynced Devices” screen is displayed when online connected devices are detected in the actual operational environment.

**1** **Select a connected device from the list, and then drag this device to the connected device to which you want to apply the settings of the “Device List” screen or the “Link Configuration” screen.**

- You can click the update button to update the display of the devices on the same network.
- You cannot drag a device to one that has a different model or to which a different device ID or IP address has been set.

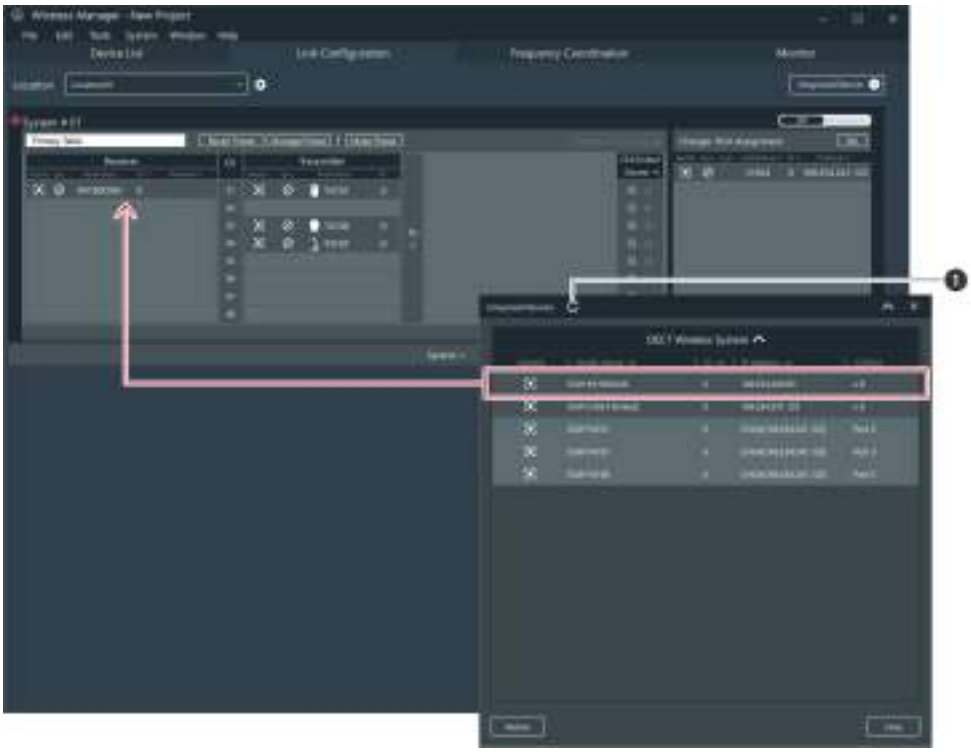

❶ Update button

**2** **Set the items to apply.**

| Item name | Description |
|---|---|
| Software (excluding network settings) | Device settings created in advance will be maintained. However, network settings will not be applied. To change network settings, you have to do so from the Device Setting screen. |
| Connected device | The settings of an online connected device will be applied. |

- Wireless Manager settings are always applied to the link configuration information.

# Monitoring devices

## Adding a monitor

Monitors a device selected from the device list.

- This procedure cannot be used on the “Online Device(s)” screen.

**1** **Click the import button on the “Monitor” screen.**

**2** **Select the device and channels to monitor.**

❶ You can filter the displayed devices with the tags and location.

❷ Selects/clears the selection of all the channels.

❸ Selects the device/channel to add.

❹ Opens the device list. After opening this list, you can select the channels.

**3** **Click “Add”.**

» **The selected device/channel monitor is added to the “Monitor” screen.**

**4** **Click “Close” to close the “Import Channel” screen.**

- You can drag the monitors to change their layout.

## How to read the receiver monitor

❶ **Device identifier**

Identifies connected devices. Click the icon to make the indicator lamp of the corresponding device flash.

❷ **Channel**

Displays the channel name and number.

❸ **Tx**

Displays the device name, device ID, gain, battery level, and usable time of the linked transmitter. You can right-click this area to open the device settings of the transmitter.
The battery level percentage is not displayed when the device is being charged via USB.

❹ **RF**

Displays the "RF Power" setting and the RF level. You can right-click this area to open the device settings of the receiver.

❺ **Audio**

Displays the off status of the high-pass filter, the cutoff frequency, and the receiver audio level. You can right-click this area to open the device settings of the receiver.

❻ **Setting status**

Displays the preset name, RF mode, and roaming settings.

**7 Display size selector**

Click this area to switch the display size.

**8 Model name**

Displays the model name of the receiver.

- The displayed usable time is a guideline. Usage for the displayed time is not necessarily guaranteed.

## How to read the charging station monitor

**1 Device identifier**

Identifies connected devices. Click the icon to make the indicator lamp of the corresponding device flash.

**2 Charging station number**

Displays the charging station number. When charging stations are linked together, numbers are assigned in order starting from the charging station to which the AC adapter is connected.

**3 Charging status**

Displays the port number of the charging station as well as the device name, device ID, and charging status of the transmitter along with the time until it finishes charging. You can right-click this area to open the device settings of the transmitter or charging station. Right-click the battery mark to display the “Battery Cycle”, “Battery Health”, and “Temperature”.
Battery Cycle: The count is incremented after the battery is charged to a certain level.
Battery Health: Degree of battery deterioration
Temperature: Battery temperature during charging

**❹ Model name**

Displays the model name of the charging station.

- The displayed time until charging finishes is a guideline. It may vary depending on the number of transmitters being charged.
- The Battery Cycle, Battery Health, and Temperature are guidelines.
- The time until charging finishes, displayed as a percentage, is a guideline. Therefore, the percentage displayed in the charging station monitor during charging may differ from the percentage displayed for the battery level on the receiver monitor during usage.

## Grouping monitors together

You can group monitors together and assign names and colors to the groups.

- This procedure cannot be used on the “Online Device(s)” screen.

**1 While holding down the Ctrl key or the command key, click the monitors to group together.**

**2 Click “Group” or right-click one of the selected monitors.**

**3 Enter the group name and select the color.**

**4** **Click “OK”.**

» **The selected monitors are grouped together.**

- You can ungroup a group of monitors by right-clicking it and selecting the corresponding menu command.
- Click the group gear mark to display the “Monitor Group Setting” screen.

## Configuring monitor settings

You can set how monitors are displayed.

- This procedure cannot be used on the “Online Device(s)” screen.

**1** **Click the part indicated with the red frame.**

**2** **Configure the monitor settings.**

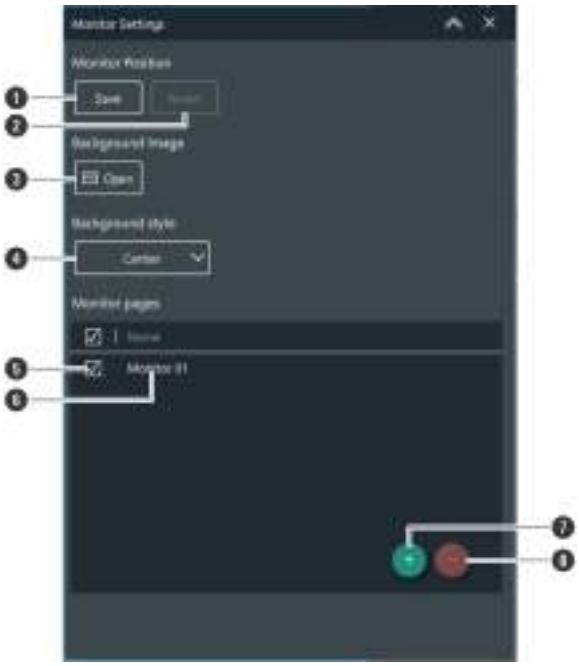


1. Saves the current position.
2. Reverts to the saved position.
3. Select the image file displayed in the background of the monitor. Click "×" to delete the displayed background image.
4. Sets how the background image is displayed.
   Center: The background image is displayed with its original size.
   Stretch: The background image is stretched to match the size of the screen.
   Tile: Multiple instances of the background image in its original size are displayed as tiles.
5. You can use "pages" on the "User Defined" screen to switch between the monitor pages selected with the check box.
6. Click the text to change the page name.
7. Adds a monitor page.
8. Deletes the selected monitor page.

## 3 Close the "Monitor Settings" screen by clicking the part indicated with the red frame.

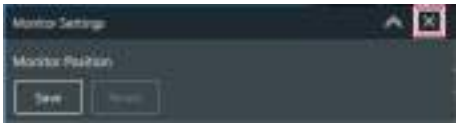

# Wireless Manager device settings

## How to open the “Device Setting” screen.

You can open the “Device Setting” screen with the following methods.

### From the menu

**1** **Click “Edit” -> “Device” -> “Device Setting”.**

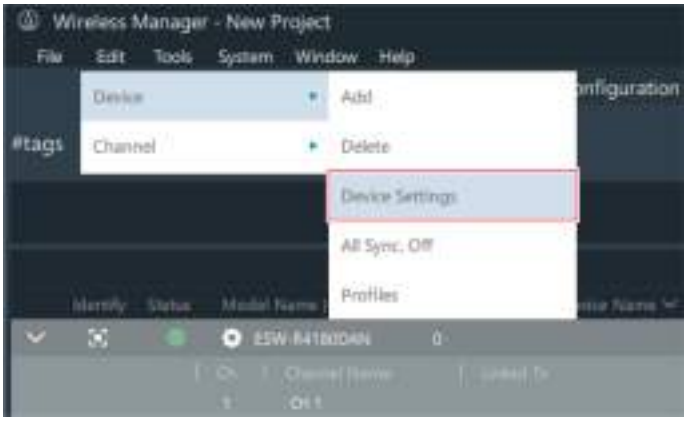


### From the “Device List” screen

**1** **Click the part indicated with the red frame.**

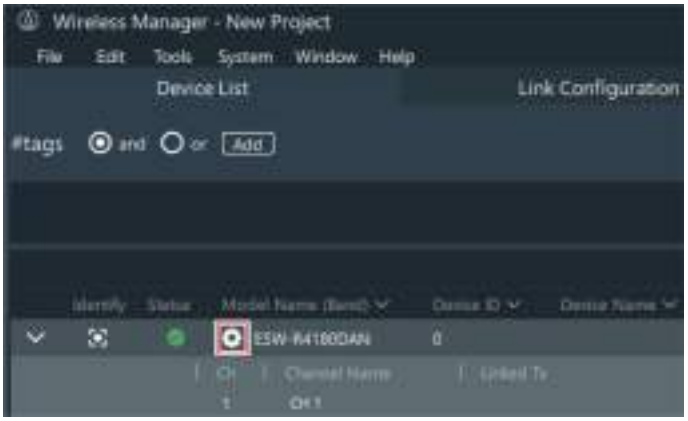

## From the “Link Configuration” screen

**1** **Right-click the part indicated with the red frame, and then click “Device Setting”.**

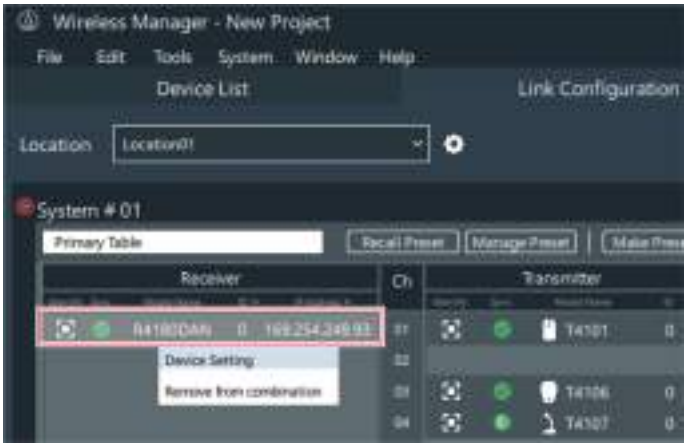


## From a “Monitor” screen

**1** **Right-click the part indicated with the red frame, and then click each device setting.**

CHG5
No.2
01
ID:0
100%
FULL
02
No Tx
03
ID:0
100%
FULL
04
No Tx
R4180DAN
CH 1
CH1
Tx
ID:0
100%
26.0 H
Gain
0dB
RF
Mid
Audio
HPF : OFF
Mix
Peak

# ESW-R4180DAN

## System

| Item name | Description |
|---|---|
| Device ID | Set the receiver's ID number. When using multiple receivers at the same time, set a unique number for each of them. |
| Device Name | Set the receiver's name. |
| Location | Display the location name set on the "Link Configuration" screen. |
| Channel Name | Set the name of each channel. You can apply Dante channel labels to the channel names. |
| Roaming | Display the on/off status of the roaming function. |
| Roaming Threshold | Set the threshold of the reception level at which the receiver is switched during roaming. |
| RF Mode | Set the DECT communication mode. In "HD Mode", lowering the transmission rate of the audio to narrow the occupied bandwidth of the radio wave enables simultaneous operation on multiple channels more than when "Standard" is selected. |
| RF Power | Set the RF power. |
| LED | Set whether to turn on/off the display of the status and link indicator lamps of the receiver. |
| Reset to default value | Reset the "System" settings to their default values. |
| Version | Display the model name, DECT mode[1], firmware version, and DECT ID[2]. |
| Factory Reset | Reset all the receiver settings to their factory defaults. |
| Reboot | Restart the receiver. |

[1] The mode is set to match the country or region in which the device is used. This mode is displayed with a two-digit number.

[2] This is the unique ID of the receiver/transmitter.

## Audio

| Item name | Description |
|---|---|
| All Mute | Mute (red)/unmute (no color) all channels as a batch. |
| Channel Mute | Mute (red)/unmute (no color) each channel. |
| Channel Volume | Set the volume of each channel. |
| High-pass Filter | Turn the high-pass filter off or set the cutoff frequency. |
| Meter Setting | Pre: Display the input level from the transmitter on the monitor.<br>Post: Display the output level of the receiver on the monitor. |
| Reset to default value | Reset the "Audio" settings to their default values. |

## Network

| Item name | Description |
|---|---|
| IP Setting | Mode: Set how to obtain IP addresses. Set this to “Auto” to assign IP addresses automatically by, for example, a DHCP server. Set this to “Static” to specify static IP addresses.<br>IP Address[1]: Set the IP address.<br>Subnet Mask[1]: Set the subnet mask.<br>Gateway Address[1]: Set the gateway address.<br>Port Number[1]: Display the IP control port number. |
| Remote Control | Level Notification: Set whether to turn on/off notifications of the RF level from the receiver and of the audio level.<br>Multicast Address: Set the address for multicast.<br>Multicast Port Number: Set the port number for multicast.<br>Rx Sync Port: Display the port number used in receiver synchronization. Use a number other than this for the Multicast Port Number. |
| Syslog | Set whether to send the log message to the Syslog server. Syslog is a standard for transferring log messages across IP networks. It is used for administration of computer systems and security monitoring. |
| NTP Setting | Enable: Turn the network time protocol on/off.<br>Server Address[2]: Set the server address.<br>Port Number[2]: Set the port number.<br>Time Zone[2]: Set the time zone.<br>Daylight Saving Time[2]: Turn daylight saving time on/off and set the day and time for the start and end of daylight saving time. |
| Mac Address | Display the MAC address. |

[1] This can be set when “Mode” under “IP Setting” is set to “Static”.

[2] This can be set when “Enable” under “NTP Setting” is set to “ON”.

## Dante

| Item name | Description |
|---|---|
| Dante IP Setting | Port Mode: Display the port mode set with Dante Controller.<br>IP Mode: Display the IP mode set with Dante Controller.<br>Dante IP Address: Display the Dante IP address. |
| Dante Device/Channel Name | Device Name: Display the device name set with Dante Controller.<br>Channel Label: Display the channel name set with Dante Controller. |
| Dante Information | Display the Dante model and firmware version. |
| Mac Address (Dante) | Display the MAC address. |

# ESW-T4101/ESW-T4102

## System

| Item name | Description |
|---|---|
| Device ID | Set the transmitter's ID number. |
| Device Name | Set the transmitter's name. |
| Location | Display the location name set on the "Link Configuration" screen. |
| Gain | Set the input gain of the audio input. For the ESW-T4101, set the input gain of the "External Microphone" and "Internal Microphone". |
| Mute | Enable/disable the operation when the transmitter is muted. |
| Battery Alert[1] | If the battery level drops too low, the status indicator lamp flashes. Set when to make this lamp flash by specifying at, approximately, how many minutes before the battery runs out the lamp will flash. [2] |
| Reset to default value | Reset the "System" settings to their default values. |
| Version | Display the model name, firmware version, and DECT ID[3]. |
| Factory Reset | Reset all the transmitter settings to their factory defaults. |

[1] This is displayed when the device is in a charging station.

[2] The set time is a guideline. This varies depending on usage conditions.

[3] This is the unique ID of the receiver/transmitter.

# ESW-T4106/ESW-T4107

## System

| Item name | Description |
|---|---|
| Device ID | Set the transmitter's ID number. |
| Device Name | Set the transmitter's name. |
| Location | Display the location name set on the "Link Configuration" screen. |
| Gain | Set the input gain of the audio input. |
| Polar Pattern[1] | Set the polar pattern of the microphone |
| Reset to default value | Reset the "System" settings to their default values. |
| Version | Display the model name, firmware version, and DECT ID[2]. |
| Factory Reset | Reset all the transmitter settings to their factory defaults. |

[1] This is an ESW-T4106 setting item.

[2] This is the unique ID of the receiver/transmitter.

## Mute

| Item name | Description |
|---|---|
| Mute functionality | Disable: Disable the mute operation.<br>Enable: Enable the mute operation. |
| Mute Mode[1] | Set the operation when the talk switch of the transmitter is pressed.<br>Toggle: The device switches between muted and unmuted each time the talk switch is quickly pressed.<br>Touch to Talk: The device is unmuted while the talk switch is pressed.<br>Touch to Mute: The device is muted while the talk switch is pressed. |
| Default Mute Setting(Toggle)[2] | Set the mute functionality used when the device turns on with “Mute Mode” set to “Toggle”.<br>Default Unmute: The device turns on unmuted.<br>Mute: The device turns on muted. |
| Mute LED Color | Set the display color of the talk indicator lamp when the device is muted. |
| Unmute LED Color | Set the display color of the talk indicator lamp when the device is unmuted. |
| Reset to default value | Reset the “Mute” settings to their default values. |

[1] This can be set when “Mute functionality” is set to “Enable”.

[2] This can be set when “Mute Mode” is set to “Toggle”.

# ESW-CHG4/ESW-CHG5

## System

| Item name | Description |
|---|---|
| Device ID | Set the charging station's ID number. |
| Device Name | Set the charging station's name. |
| Location | Display the location name set on the "Link Configuration" screen. |
| Linked Chargers | When offline, set the charging stations to link. When online, display the linked charging stations. |
| LED | Set whether to turn on/off the display of the power and status indicator lamps of the charging station. |
| Link Button | To prevent incorrect handling, set the operation of the LINK button.<br>Enable: The LINK button is unlocked at all times and can be used.<br>Lock: The LINK button cannot be used when the charging station turns on. Press and hold (approximately 2 seconds) the LINK button to unlock it. This button will be locked again if no operations occur for approximately 5 seconds.<br>Disable: The LINK button is locked at all times and cannot be used. Furthermore, the button cannot be unlocked. |
| Reset to default value | Reset the "System" settings to their default values. |
| Version | Display the model name and firmware version. |
| Factory Reset | Reset all the charging station settings to their factory defaults. |

## Network

| Item name | Description |
|---|---|
| IP Setting | Mode: Set how to obtain IP addresses. Set this to “Auto” to assign IP addresses automatically by, for example, a DHCP server. Set this to “Static” to specify static IP addresses.<br>IP Address[1]: Set the IP address.<br>Subnet Mask[1]: Set the subnet mask.<br>Gateway Address[1]: Set the gateway address.<br>Port Number[1]: Display the IP control port number. |
| Remote Control | Multicast Address: Set the address for multicast.<br>Multicast Port Number: Set the port number for multicast.<br>Rx Sync Port: Display the port number used in receiver synchronization. Use a number other than this for the Multicast Port Number. |
| Syslog | Set whether to send the log message to the Syslog server. Syslog is a standard for transferring log messages across IP networks. It is used for administration of computer systems and security monitoring. |
| NTP Setting | Enable: Turn the network time protocol on/off.<br>Server Address[2]: Set the server address.<br>Port Number[2]: Set the port number.<br>Time Zone[2]: Set the time zone.<br>Daylight Saving Time[2]: Turn daylight saving time on/off and set the day and time for the start and end of daylight saving time. |
| Mac Address | Display the MAC address. |

[1] This can be set when “Mode” under “IP Setting” is set to “Static”.

[2] This can be set when “Enable” under “NTP Setting” is set to “ON”.

# Default value lists

## ESW-R4180DAN

| Category | Item name | | Default value |
|---|---|---|---|
| System | Device ID | | 0 |
| | Device Name | | BLANK |
| | Location | | BLANK |
| | Channel Name | Ch1 | CH 1 |
| | | Ch2 | CH 2 |
| | | Ch3 | CH 3 |
| | | Ch4 | CH 4 |
| | | Ch5 | CH 5 |
| | | Ch6 | CH 6 |

| | | | |
|---|---|---|---|
| | | Ch7 | CH 7 |
| | | Ch8 | CH 8 |
| | Roaming | | OFF |
| | Roaming Threshold | | –85 dB[1] |
| | RF Mode | | Standard |
| | RF Power | | Mid |
| | LED | | ON |
| Audio | Channel Volume | | 0 dB |
| | High-pass Filter | | OFF |
| | Meter Setting | | Post |
| Network | IP Setting | Mode | Auto |
| | | IP Address | 192.168.0.20[2] |
| | | Subnet Mask | 255.255.255.0[2] |
| | | Gateway Address | 192.168.0.1[2] |
| | Remote Control | Audio Level Notification | ON |
| | | Multicast Address | 239.0.0.100 |
| | | Multicast Address Port Number | 17000 |
| | Syslog | | OFF |
| | NTP Setting | Enable | OFF |
| | | Server Address | 192.168.0.40[3] |
| | | Port Number | 123[3] |
| | | Time Zone | 00:00[3] |
| | | Daylight Saving Time | OFF[3] |
| Dante | Dante IP Setting | Port Mode | Single Cable |
| | | IP Mode | Auto |

[1] This is the default value when “Roaming” is set to “ON”.

[2] This is the default value when “Mode” under “IP Setting” is set to “Static”.

[3] This is the default value when “Enable” under “NTP Setting” is set to “ON”.

## ESW-T4101

| Category | Item name | | Default value |
|---|---|---|---|
| System | Device ID | | 0 |
| | Device Name | | BLANK |
| | Location | | BLANK |
| | Gain | External Microphone | 0 dB |
| | | Internal Microphone | 0 dB |
| | Mute | | Enable |
| | Battery Alert | | OFF |

## ESW-T4102

| Category | Item name | Default value |
|---|---|---|
| System | Device ID | 0 |
| | Device Name | BLANK |
| | Location | BLANK |
| | Gain | 0 dB |
| | Mute | Enable |
| | Battery Alert | OFF |

## ESW-T4106

| Category | Item name | Default value |
|---|---|---|
| System | Device ID | 0 |
| | Device Name | BLANK |
| | Location | BLANK |
| | Gain | 0 dB |
| | Polar Pattern | Cardioid |
| | Battery Alert | OFF |
| Mute | Mute functionality | Enable |
| | Mute Mode | Toggle |
| | Default Mute Setting(Toggle) | Default Unmute |
| | Mute LED Color | Red |
| | Unmute LED Color | Green |

## ESW-T4107

| Category | Item name | Default value |
|---|---|---|
| System | Device ID | 0 |
| | Device Name | BLANK |
| | Location | BLANK |
| | Gain | 0 dB |
| | Battery Alert | OFF |
| Mute | Mute functionality | Enable |
| | Mute Mode | Toggle |
| | Default Mute Setting(Toggle) | Default Unmute |
| | Mute LED Color | Red |
| | Unmute LED Color | Green |

## ESW-CHG4/ESW-CHG5

| Category | Item name | | Default value |
|---|---|---|---|
| System | Device ID | | 0 |
| | Device Name | | BLANK |
| | Location | | BLANK |
| | LED | | ON |
| | Link Button | | Enable |
| Network | IP Setting | Mode | Auto |
| | | IP Address | 192.168.0.20[1] |
| | | Subnet Mask | 255.255.255.0[1] |
| | | Gateway Address | 192.168.0.1[1] |
| | Remote Control | Multicast Address | 239.0.0.100 |
| | | Multicast Address Port Number | 17000 |
| | Syslog | | OFF |
| | NTP Setting | Enable | OFF |
| | | Server Address | 192.168.0.40[2] |
| | | Port Number | 123[2] |
| | | Time Zone | 00:00[2] |
| | | Daylight Saving Time | OFF[2] |

[1] This is the default value when “Mode” under “IP Setting” is set to “Static”.

[2] This is the default value when “Enable” under “NTP Setting” is set to “ON”.

## Transmitter multi registration

Multi registration is a function for registering multiple transmitters to a single channel.

- This function is useful because it allows you to immediately switch to a different transmitter when the battery of the one in use dies.

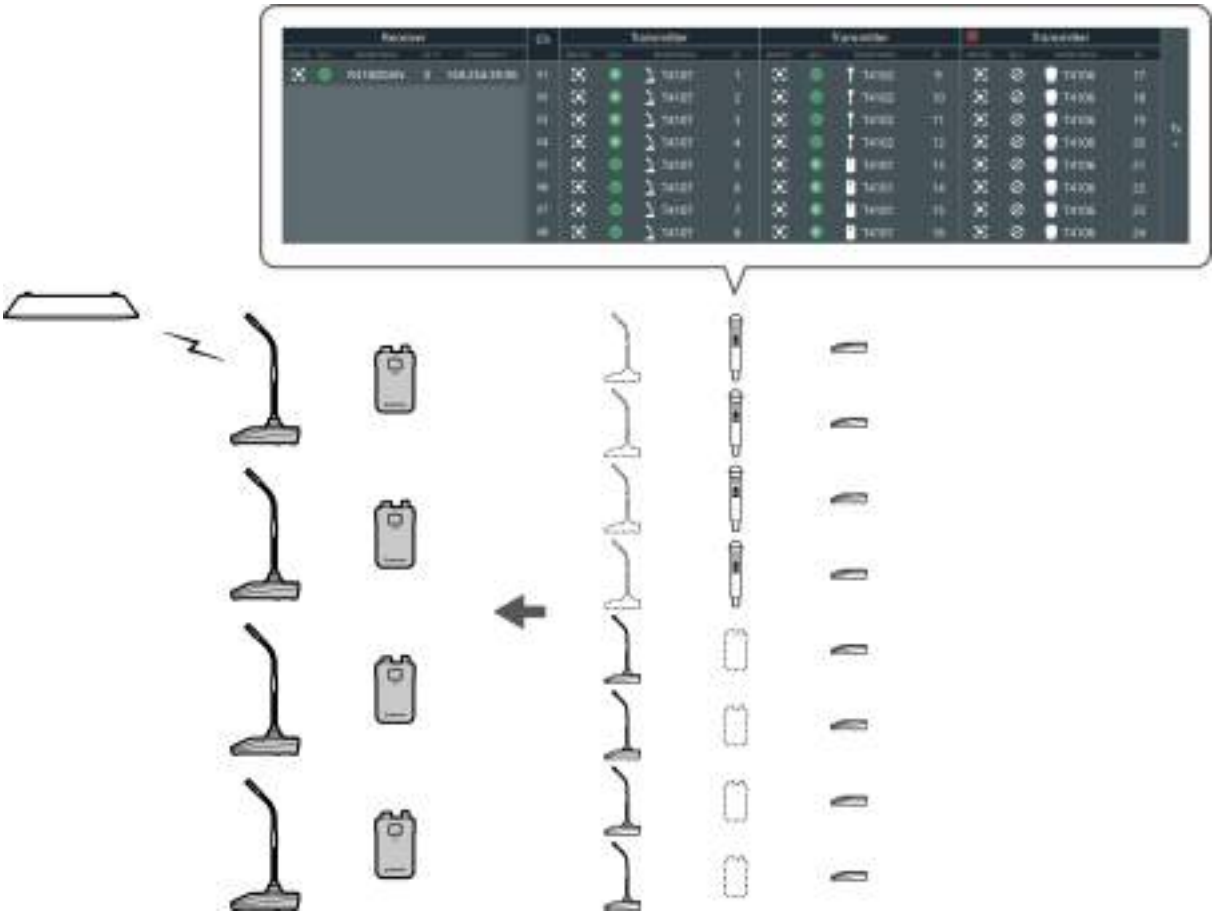

- Among multiple transmitters that have been registered, you can specify one transmitter to link and save this as a preset in advance. Refer to "Presets" (p. 100) for details.
- You cannot link a transmitter to a channel to which a transmitter has already been linked. To switch between transmitters, turn off the linked transmitter, and then turn on the transmitter to link. Alternatively, recall a preset in which the combination containing the transmitter to link is saved (p. 103).
- If you attempt to simultaneously connect multiple transmitters that have been registered, the first transmitter that connects to the receiver is linked.

### Adding a transmitter area

When registering multiple transmitters, add transmitter areas.

- One system can have up to six transmitter areas.

**1** **Click the part indicated with the red frame on the "Link Configuration" screen.**

» **A transmitter area is added, allowing you to register multiple transmitters.**

# Presets

Among multiple transmitters that have been registered, you can specify one transmitter to link and save this as a preset.

- Presets are useful in that you can create one for each location or situation.
- The Mix Out setting is also saved to presets.
- When a preset has been recalled, you cannot link to transmitters that are not specified by this preset.

## Creating a new preset/editing an existing preset

**1** **Click “Make Preset” on the “Link Configuration” screen.**

- To edit the recalled preset, click “Edit Preset”.

**2** **Select the transmitter for each channel to save in the preset.**

- Red frames are displayed around the selected transmitters. You can select one transmitter for each channel.
- Click a selected transmitter to clear this selection.

**3** **As necessary, set the mix out.**

- Refer to "Setting the mix out" (p. 78) for details.

**4** **Click "Save As".**

- To overwrite the recalled preset, click "Save".

**5** **Set the preset number and name on the "Save Preset" screen.**

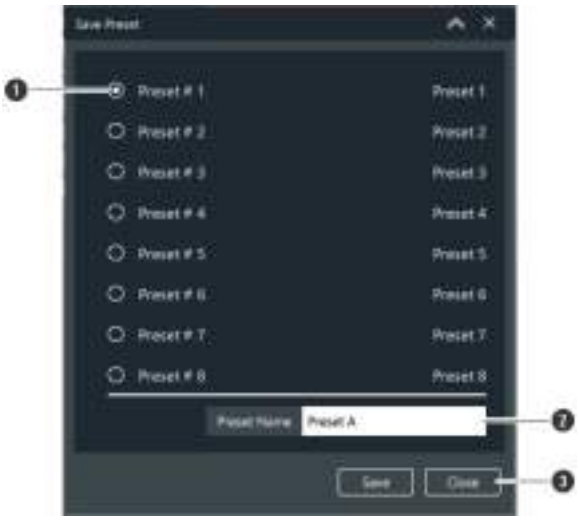


❶ Select the preset number to save.

❷ Enter the preset name.

❸ Closes the screen without saving the preset.

**6** **Click "Save".**

» **The preset is saved to the selected preset number.**

## Recalling a preset

Recall a saved preset.

**1** **Click "Recall Preset" on the "Link Configuration" screen.**

**2** **Select the preset to recall.**

- If you will not recall a preset, select "Primary Table".

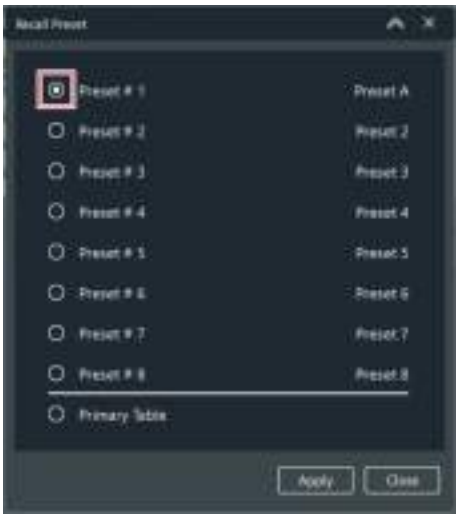


**3** **Click "Apply".**

» **The selected preset is applied.**

**4** **Click "Close" to close the "Recall Preset" screen.**

## Managing presets

Delete saved presets and change preset names.

**1** **Click "Manage Preset" on the "Link Configuration" screen.**

**2** **Delete presets and change preset names.**

- The currently recalled preset cannot be deleted.

❶ Select the presets to delete.

❷ Deletes the selected presets.

❸ Enter the preset name.

❹ Applies the entered change to the preset name.

**3** **Click "Close" to close the "Manage Preset" screen.**

# Roaming mode

Register multiple receivers as one roaming group.

- You can use one transmitter in multiple rooms without switching between transmitters.
- If the link is disconnected because the distance to the receiver is too large when moving around holding the transmitter, the receiver with the best communication status in the roaming group is automatically searched for and linked to.
- You can adjust the timing with which the receiver is switched by setting the roaming threshold.
- You can set up to five receivers in one roaming group.
- When a transmitter restarts, it is linked to the receiver with the best communication status at that time. When moving between rooms, it is recommended to restart the transmitter.

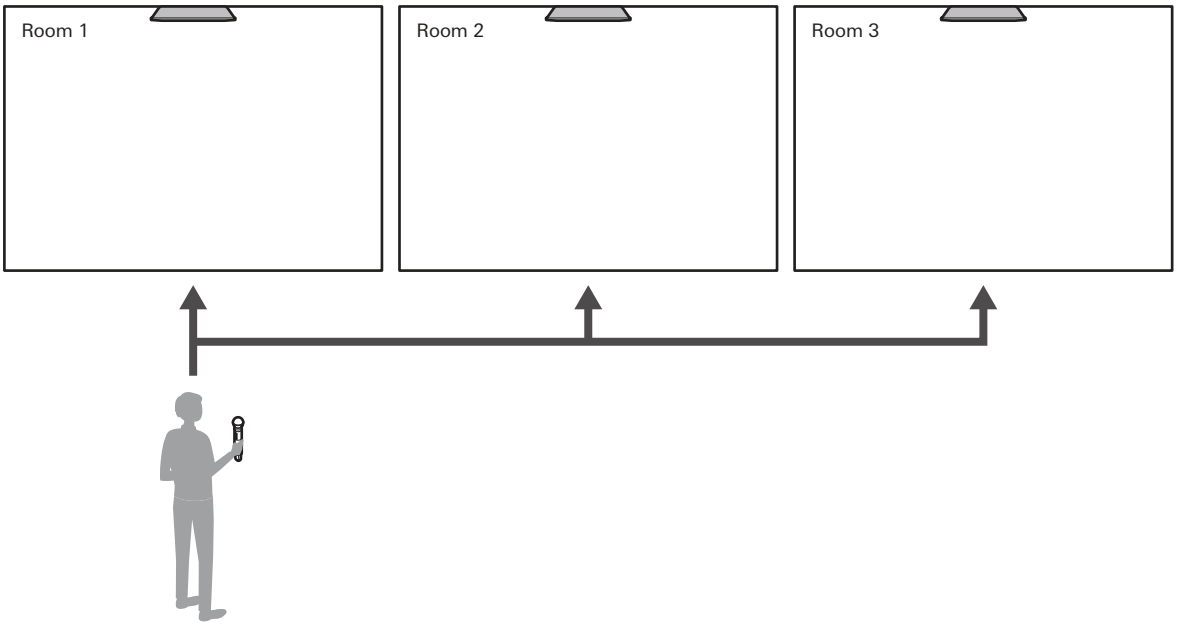


## Switching to roaming mode

**1** **Click “Roaming On” on the “Link Configuration” screen.**

**2** **Click “OK” on the confirmation message.**

» **The device switches to roaming mode.**

**3** **Click “Unsynced Device” or the import button.**

**4** **Drag the receivers to add to roaming to the “Receiver Roaming Group”.**

**5** **Click “OK” to close the confirmation message.**

- To cancel roaming mode, remove receivers until there is only one registered, and then click “Off”.

## Configuring roaming settings

Configure the RF and audio settings in roaming mode. The configured roaming settings are shared between multiple receivers. Roaming setting items cannot be configured on the “Device Setting” screen.

**1** **Switch to roaming mode.**

**2** **Click “Setting” next to “Receiver Roaming Group”.**

**3** **Configure the RF settings.**

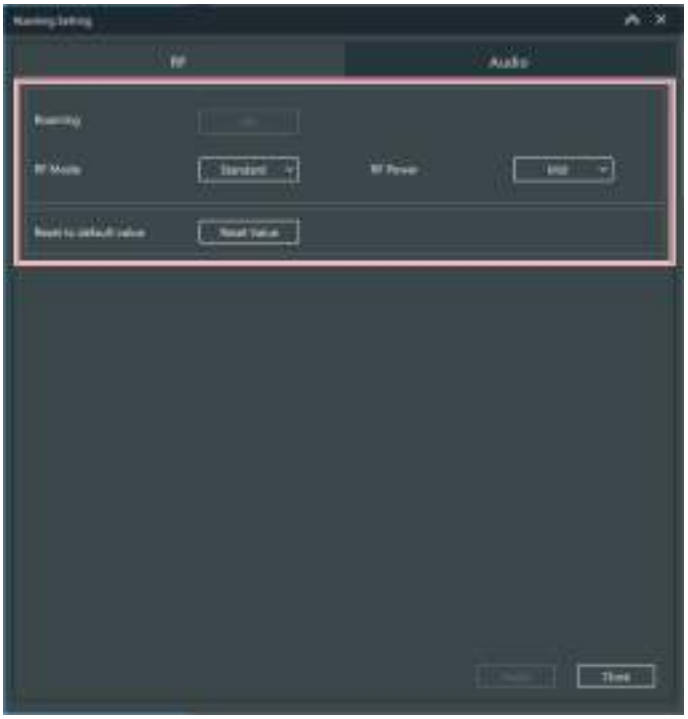

| Item name | Description |
|---|---|
| Roaming | Turn the roaming function on/off. |
| RF Mode | Set the DECT communication mode.<br>In “HD Mode”, lowering the transmission rate of the audio to narrow the occupied bandwidth of the radio wave enables simultaneous operation on multiple channels more than when “Standard” is selected. |
| RF Power | Set the RF power. |
| Reset to default value | Reset the RF settings to their default values. |

**4** **Click “Apply”.**

**5** **Click “Audio”.**

**6** **Configure the audio settings.**

| Item name | Description |
|---|---|
| All Mute | Mute (red)/unmute (no color) all channels as a batch. |
| Channel Mute | Mute (red)/unmute (no color) each channel. |
| Channel Volume | Set the volume of each channel. |
| High-pass Filter | Turn the high-pass filter off or set the cutoff frequency. |
| Meter Setting | Pre: Display the input level from the transmitter on the monitor.<br>Post: Display the output level of the receiver on the monitor. |
| Reset to default value | Reset the audio settings to their default values. |

**7** **Click “Close” to close the “Roaming Setting” screen.**

**8** **If it is necessary to adjust the receiver and transmitter connection range, set the roaming threshold of the receiver.**

- The higher the roaming threshold, the narrower the receiver and transmitter connection range.
- You can set the roaming threshold on the receiver’s “Device Setting” screen. Refer to "Wireless Manager device settings" (p. 87) for details.

## Setting the location name

As necessary, set the name of the location where this system is installed.

**1** **Click the part indicated with the red frame on the “Link Configuration” screen.**

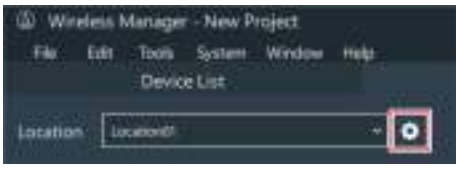


**2** **Add a location.**

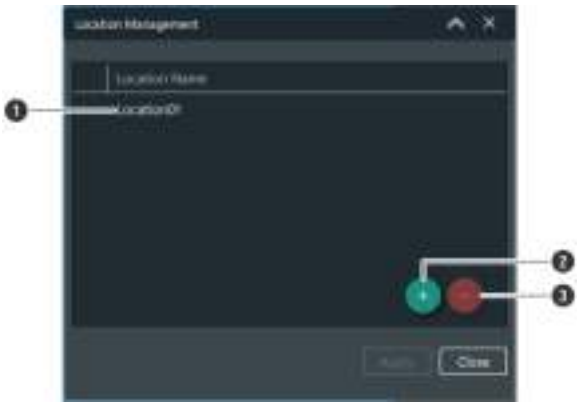


❶ Double-click the text to change the location name.

❷ Add a location.

❸ Deletes the selected location.

**3** **Click "Apply".**

» **The changed location details are applied.**

**4** **Click "Close" to close the "Location Management" screen.**

**5** **Click the part indicated with the red frame next to "Location" and select the location from the list.**

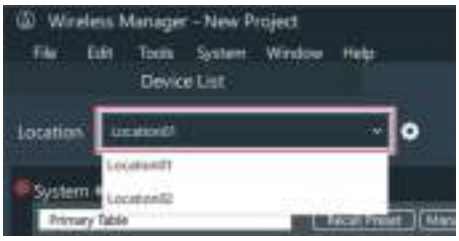


## Setting charging station port assignments

Port assignments are settings that assign receiver channels to charging ports on charging stations. These settings indicate which channels to register transmitters to when transmitters are inserted into charging ports and the LINK button on the charging station is pressed to configure the link.

- You have to register charging stations in advance on the "Link Configuration" screen.

**1** **Click "Set" on the "Link Configuration" screen.**

**2** **Set the port assignments.**

❶ Select the charging station.

❷ Displays information such as the device ID of the selected charging station.

❸ Displays information such as the device ID of the receiver that will be made to register the transmitter.

❹ Channels are assigned in order starting from “Port 01” on the charging station to which the AC adapter is connected.

❺ Select the channel to assign.

**3** **Click “Apply”.**

**4** **Click “Close” to close the “Charger Link Button Configuration” screen.**

# Configuring links with the LINK button

You can use the LINK button on a charging station to configure the link to a transmitter. Use this function in an emergency when you have to configure the link to the transmitter without using Wireless Manager.

- You have to set charging station port assignments in advance in Wireless Manager. Refer to "Setting charging station port assignments" (p. 110) for details.

**1** **Insert into the charging station the transmitter whose link will be configured.**

**2** **Press and hold (approximately 3 seconds) the LINK button.**

- If charging stations are linked together, links will be configured to all the inserted transmitters when the LINK button on any charging station is pressed and held (approximately 3 seconds).
- The power indicator lamp lights alternately in green and blue, and then the charging indicator lamp flashes.

| Status indicator lamp display | Link configuration |
|---|---|
| Flashing in green (three times) | Registration success |
| Flashing in red (five times) | Registration failure |

- If you configure a link to a transmitter with the LINK button of a charging station, the transmitter will be registered to a transmitter area different from the normal transmitter area.

## LINK button lock

You can use the “Link Button” setting under “Device Setting” to lock and disable the LINK button. Refer to "Wireless Manager device settings" (p. 87) for details on “Device Setting”.

# Menus

## Menu list

### File

| Item name | Description |
|---|---|
| New Project | Create a new project file. |
| Open Project | Open a project file. |
| Open Recent Project | Open the most recently opened project file. |
| Save | Save the current project over an already open project file. |
| Save As | Name the current project and save as a project file. |
| Import | Device List: Import a device list.<br>Model Profiles: Import a model profile. |
| Export | Device List: Export a device list as a json or csv file.<br>Model Profiles: Export a model profile.<br>Channel List Report[1]: Export the channel list from the “Frequency Coordination” screen as a pdf or csv file. |
| Project Properties | General: Configure the access restrictions, editing authority settings, initial monitor screen, display settings for the Link Configuration screen, and multi-point receiver function.<br>Monitor: Set the contents displayed in alerts and the log details.<br>Show: Set the project and venue information. |
| Close | Close Wireless Manager. |

[1] This is not used with this system.

### Edit

| Item name | Description |
|---|---|
| Device | Add: Add a device to the device list.<br>Delete: Delete a device from the device list.<br>Device Setting: Configure the settings for devices.<br>All Sync. Off: Turn off sync for all devices.<br>Profiles[1]: Edit a model profile. |
| Channel[1] | Import from Device List: Import a channel from the device list.<br>Delete: Delete a channel from the channel list. |

[1] This is not used with this system.

## Tools

| Item name | Description |
|---|---|
| Timed Walk Test | Launch the walk test tool. Refer to "Walk test" (p. 114) for details. |
| DECT RF Scan | Use one receiver to scan the surrounding DECT operation status. Refer to "DECT RF scan" (p. 117) for details. |
| Cable Loss[1] | Easily calculate the attenuation due to cable length. |
| Max Channel Calculation[1] | Calculate roughly how many channels can be achieved in an ideal or real-world RF environment. |

[1] This is not used with this system.

## System

| Item name | Description |
|---|---|
| Preferences | Display the “Preferences” screen. Refer to "Configuring preferences" (p. 119) for details. |
| Language | Switch the language between English and Japanese. To switch the language, Wireless Manager will have to restart. |
| Change to edit mode | Switch from editing restriction state to editable state. |

## Window

| Item name | Description |
|---|---|
| Unsynced Devices | Among all the connected devices that are recognizable as online, display those devices that are not synchronized in the device list. |

## Help

| Item name | Description |
|---|---|
| Help | Display the Wireless Manager user manual. |
| Wireless Manager Updates | Check the Wireless Manager update status. |
| About | Display information on Wireless Manager. |

# Walk test

Using the walk test function will record the selected device’s RF level.

**1** **On the menu, click “Tools” -> “Timed Walk Test”.**

**2** **Click “Set Device”.**

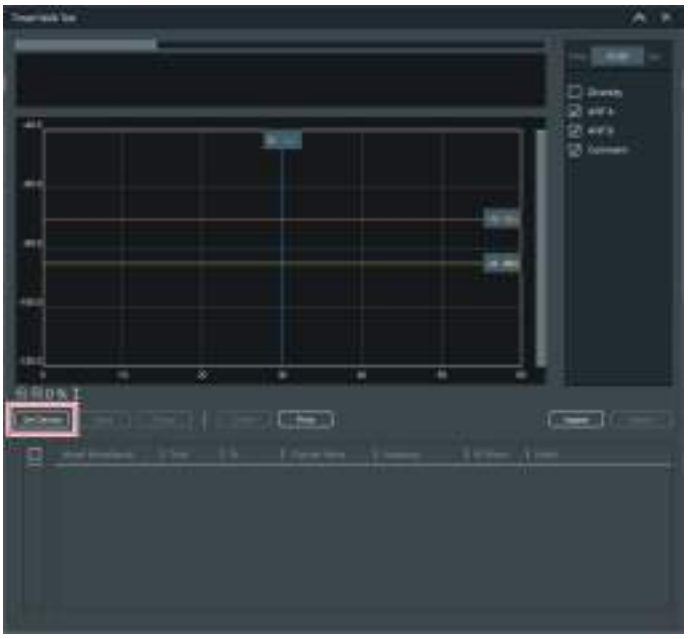

**3** **Select the device and channels to use in the walk test.**

**4** **Click “Apply”.**

**5** **Set the walk test time.**

- You can set a time of up to 10 minutes.

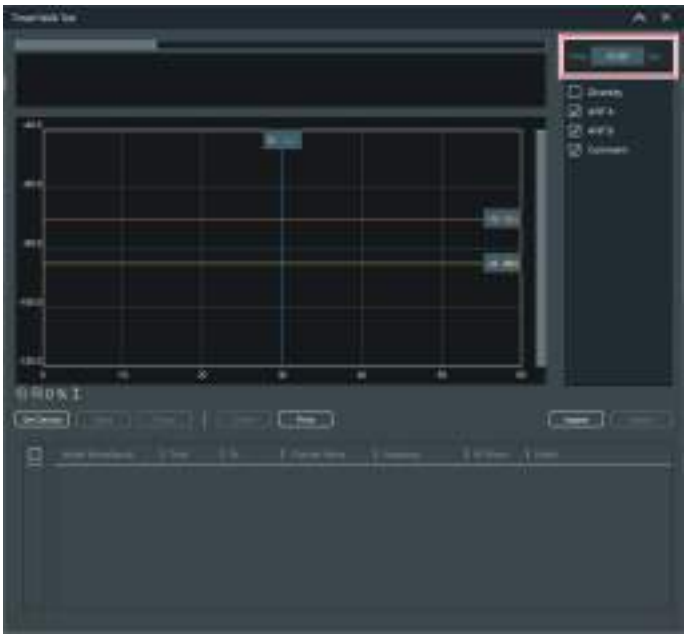

**6** **Click “Start” once all the settings are complete.**

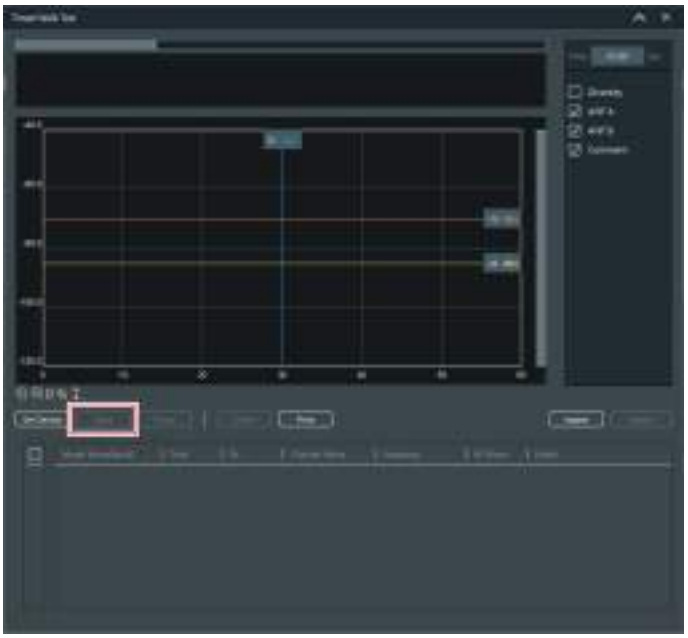

» **The walk test starts.**

- This function displays the value based on the RF level (every 1 second) obtained by the receiver.

# DECT RF scan

Scan the surrounding DECT operation status and calculate the approximate number of usable transmitter channels when using one receiver.

**1** **On the menu, click “Tools” -> “DECT RF Scan”.**

**2** **Click “Sel Rx”.**

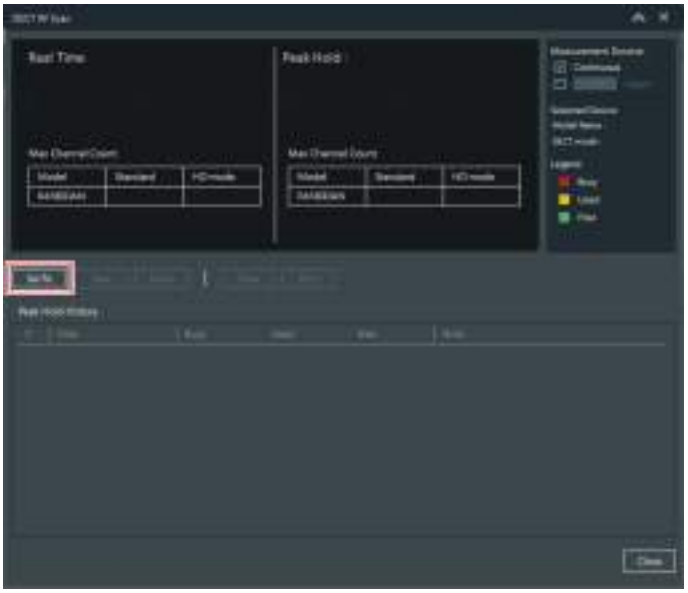

**3** **Select the device to use in the DECT RF scan.**

**4** **Click “Select”.**

**5** **Set the “Measurement Duration”.**

- If you will not set the time, select the “Continuous” check box.
- If you will set the time, select the “Hours” check box and enter the time. You can set a time of up to 99 hours.

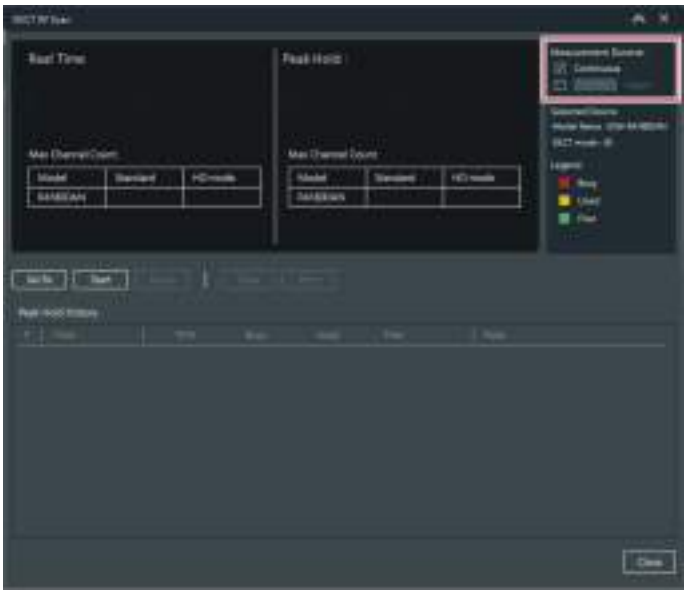


**6** **Click "Start" once all the settings are complete.**

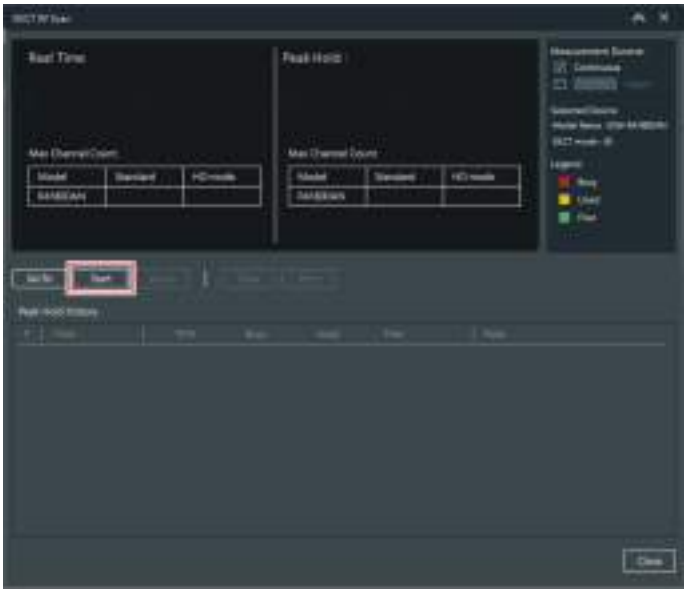


» **The DECT RF scan starts.**

- If you close Wireless Manager during the scan, you may not be able to recover the scan. In this situation, restart the receiver.

## How to view the results of the DECT RF scan

When the DECT RF scan finishes, the surrounding DECT operation status is displayed as a percentage.

- The real-time measured value and lowest value (the value when Free was the smallest during the measurement period) are displayed.
- The guideline for the number of channels is displayed for the case when “RF Mode” is “Standard” and the case when it is “HD Mode”.

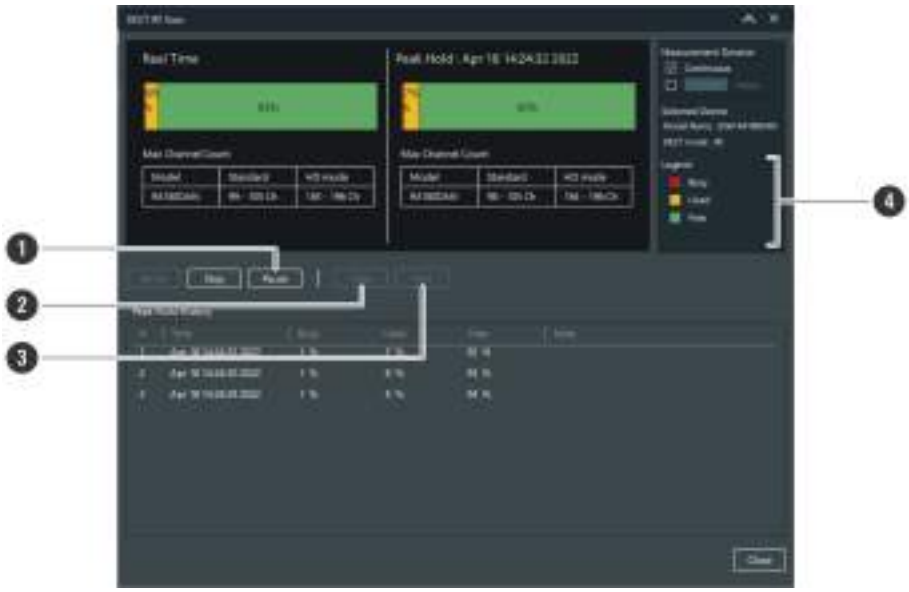


**1 Pause**

Pauses the DECT RF scan.

**2 Clear**

Deletes the record.

**3 Print**

You can output the lowest value graph to a PDF.

**4 Legend**

PHS: Transmitter channels cannot be used because PHS was detected.
Busy: Transmitter channels cannot be used because another device is in operation.
Used: A low level of interference was detected. This legend item is used when the number of used channels is insufficient.
Free: Transmitter channels can be used.

# Configuring preferences

Configure Wireless Manager settings.

**1 On the menu, click “System” -> “Preferences”.**

**2 Set each item.**

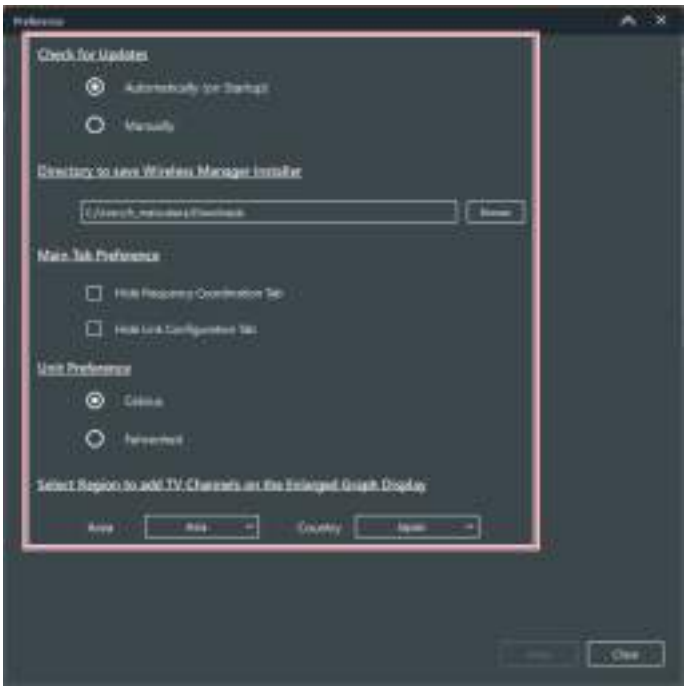


| Item name | Description |
|---|---|
| Check for Updates | Set how to check for Wireless Manager updates. |
| Directory to save Wireless Manager Installer | Set the folder in which to save installer files when updating Wireless Manager. |
| Main Tab Preference | Set whether to show/hide the “Frequency Coordination” and “Link Configuration” tabs. |
| Unit Preference | Set the temperature unit. |
| Select Region to add TV Channels on the Enlarged Graph Display[1] | Set the default area for the TV channel settings of the “Frequency Coordination” screen. |

[1] This is not used with this system.

**3** **Click “Apply”.**

» **The settings are applied.**

**4** **Click “Close” to close the “Preferences” screen.**

# Dante Controller

The ESW-R4180DAN is compatible with Dante network audio.
You can use Dante Controller (an application provided by Audinate) to set I/O on Dante devices. Refer to the Audinate website (https://www.audinate.com/) for details on Dante Controller.

# Indicator lamp displays

## Receivers

### Status indicator lamp

| Indicator lamp display | Status |
|---|---|
| Lit in green | The device is on. |
| Flashing in red | The device is starting or multiple receivers are being synchronized again. |
| Flashing slowly in green | There are duplicate IP addresses. |

### Link indicator lamp

| Indicator lamp display | Status |
|---|---|
| Lit in green | The link has been established. |
| Lit in red | The link to the transmitter has not been configured. |

### Status indicator lamp/link indicator lamp

| Indicator lamp display | Status |
|---|---|
| Flashing in green (status)<br>Flashing in red (link) | The DECT RF scan or walk test is in progress. |
| Flashing in red (status)<br>Flashing in red (link) | The receiver is not operating normally. |

## Transmitters

### Status indicator lamp

| Indicator lamp display | Status |
|---|---|
| Lit in red | The link has been established, and the device is muted. |
| Lit in green | The link has been established, and the device is unmuted. |
| Flashing quickly in red | The link to the transmitter has not been configured. |
| Flashing in red | The device is searching for the receiver to link to. |
| Flashing in orange or yellow | There is no battery power. The device will turn off within 30 minutes. [1] |
| Flashing in the color the lamp lights in when the device is muted/unmuted | The battery level is low. The device will turn off within 60/90/120 minutes. [1][2] |

[1] The time is a guideline. It varies depending on usage conditions.

[2] This function is turned off with the factory default settings. You can set the time to 60/90/120 minutes with “Battery Alert” under “Device Setting”. Refer to "Wireless Manager device settings" (p. 87) for details on “Device Setting”.

# Charging stations

## Power indicator lamp

| Indicator lamp display | Status |
|---|---|
| Lit in green | The device is on (connected to the network). |
| Lit in blue | The device is on (not connected to the network). |
| Lit alternately in green/blue | The number of charging stations that can be linked has been exceeded. |
| Flashing slowly in green | There are duplicate IP addresses. |

## Status indicator lamps

| Indicator lamp display | Status |
|---|---|
| Four lamps flashing in red in order | The device is preparing for charging. |
| One lamp lit in red | Charging is in progress (0% to less than 25%). |
| Two lamps lit in red | Charging is in progress (25% to less than 50%). |
| Three lamps lit in red | Charging is in progress (50% to less than 75%). |
| All four lamps lit in red | Charging is in progress (75% to less than 100%). |
| All four lamps lit in green | Charging is complete. |
| One lamp flashing in red | A communication failure[1] has occurred/preliminary charging[2] is in progress. |
| All four lamps flashing in red | A charging defect has occurred, preventing charging. |

[1] A charging defect occurs when the communication failure status continues for approximately 30 minutes.

[2] The preliminary charging status occurs when charging starts after a battery is fully discharged or when charging starts with a rechargeable battery at a low temperature. The charging station will return to the normal charging status after a few minutes.

# Replacing rechargeable batteries

You can purchase transmitter rechargeable batteries as service parts. Replace the rechargeable batteries according to the following procedures.

- Replace rechargeable batteries specified by Audio-Technica.

| Transmitter | Rechargeable battery |
|---|---|
| ESW-T4101/ESW-T4106/ESW-T4107 | Lithium-ion battery LI-220 |
| ESW-T4102/C510 | Lithium-ion battery LI-320 |

## ESW-T4101

**1** **Remove the screw on the side of the device, and then remove the battery cover.**

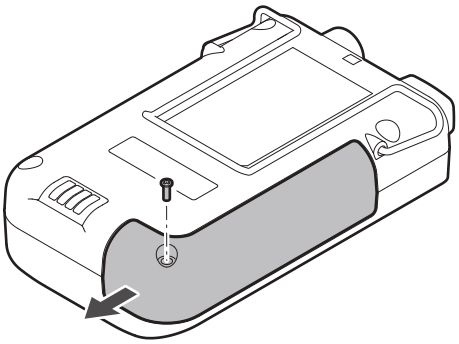

**2** **Remove the screws, and then remove the battery holder.**

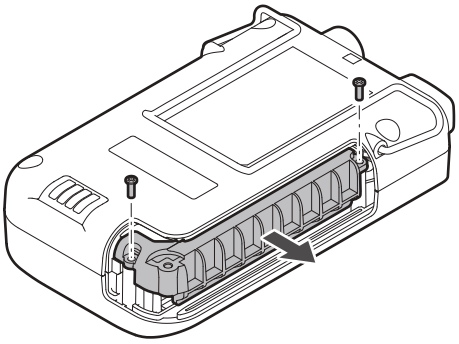

**3** **Remove and replace the rechargeable battery.**

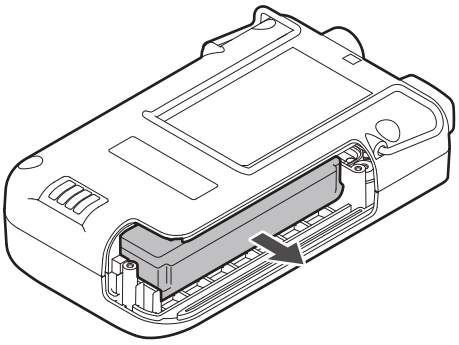

- Check that the transmitter is off before replacing the rechargeable battery.

## ESW-T4102/C510

**1** **Turn the grip and remove it.**

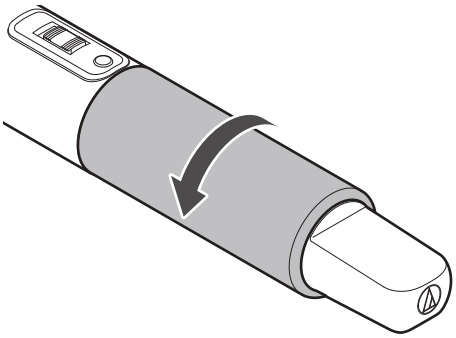

**2** **Remove and replace the rechargeable battery.**

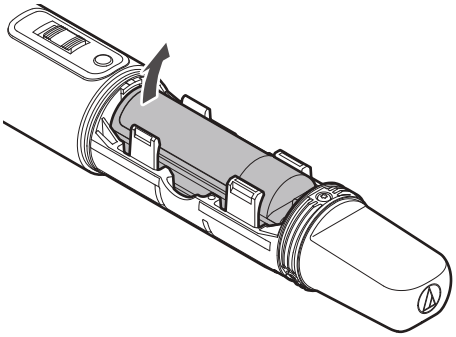

- Check that the transmitter is off before replacing the rechargeable battery.

# ESW-T4106/ESW-T4107

**1** **Remove the screws on the bottom of the device, and then remove the battery cover.**

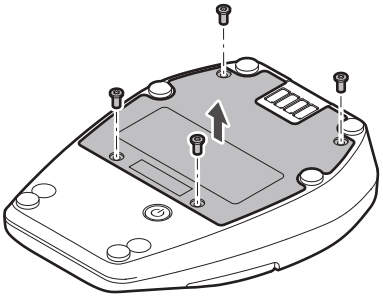

**2** **Remove and replace the rechargeable battery.**

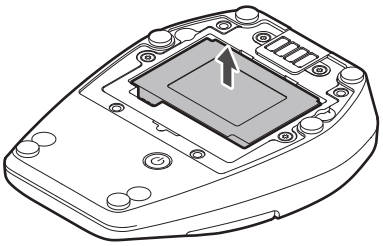

- Check that the transmitter is off before replacing the rechargeable battery.

# Troubleshooting

Use Wireless Manager to check the status of devices such as their link configuration, muting, and volume.

## Receivers and transmitters

### The receiver power can't be turned on

- Make sure that the network A port on the rear of the receiver is connected to a PoE-compatible switching hub via a LAN cable (Cat. 5e or higher, shielded cable with conductor size of 24AWG or greater in diameter).
- Make sure that the PoE-compatible switching hub is operating properly.

### The transmitter power can't be turned on

- Make sure that the rechargeable battery is in place.
- Check the battery level of the rechargeable battery.

### The receiver cannot be identified by Dante Controller

- Make sure that "Device Setting" -> "Dante" -> "Dante IP Setting" -> "IP Mode" is set correctly in Wireless Manager.
- Make sure that the Dante audio device connected to the network A port on the rear of the receiver and the Dante device to connect to are both connected to the same network.

### The receiver and transmitter cannot be linked

- Make sure that the transmitter is registered to the same system as the receiver on the "Link Configuration" screen in Wireless Manager. If these devices still cannot be linked even when registered to the same system, clicking "Refresh Link Setting" may solve the problem.
- Make sure that the number of transmitters used is less than the number of usable transmitters indicated with "Tools" -> "DECT RF Scan" in Wireless Manager.

### Even though a link has been configured, the receiver and transmitter cannot be connected or their connection is repeatedly terminated

- The receiver and transmitter encryption keys may be mismatched due to an irregularly performed link configuration. Place all the transmitters registered to the receiver in a charging station, synchronize the receiver and all the transmitters to Wireless Manager, and then click "Refresh Link Setting" in the link configuration. The devices will be registered again. Encryption key mismatches may occur when:
  (1) The link configuration is edited for a transmitter with an existing link without placing the transmitter in an online charging station.
  (2) The same receiver and transmitter are registered again to a new link configuration.

## There is no audio/the audio level is low

- Make sure that the transmitter is on.
- Make sure that the transmitter is not muted.
- Make sure that the transmitter and microphone are connected properly.
- Make sure that the receiver is not muted.
- Make sure that the registered channel of the receiver and transmitter is the same.
- Make sure that the transmitter's gain isn't too low.
- Make sure that the receiver's volume isn't too low.
- If using the mix out, make sure that the mix assignments have been set properly.
- Make sure that the network A port on the rear of the receiver is connected to a PoE-compatible switching hub via a LAN cable (Cat. 5e or higher, shielded cable with conductor size of 24AWG or greater in diameter).
- Use Dante Controller to make sure the receiver output (Dante transmitter) is routed properly to the Dante receiver device that is the output destination.

## Sound is distorted

- Make sure that the transmitter's gain isn't too high.
- Make sure that the receiver's volume isn't too high.
- Make sure that the volume of any external device isn't too high.

## Sound is interrupted

- Make sure that the transmitter and microphone are connected properly.
- Make sure that the RF power isn't too low.
- Make sure that the number of transmitters used is less than the number of usable transmitters indicated with "Tools" -> "DECT RF Scan" in Wireless Manager.

## There is unwanted noise

- Make sure that the transmitter and microphone are connected properly.
- Make sure that the RF power isn't too low.
- Make sure that the connected external microphone isn't too close to the transmitter antenna.

### Receiver indicator lamps do not light

- Make sure that “Device Setting” -> “System” -> “LED” is not set to OFF in Wireless Manager.

### The transmitter indicator lamp does not light

- Make sure that “Device Setting” -> “Mute” -> “Mute LED Color”/“Unmute LED Color” is not set to OFF in Wireless Manager (ESW-T4106/ESW-T4107 only).

### The status indicator lamp flashes

- Error displays and other such statuses are indicated with the colors of the indicator lamps and the way it flashes. Refer to "Indicator lamp displays" (p. 122) for details.

## Charging stations

### The power can’t be turned on

- Make sure that the AC adapter is connected properly.

### The device does not charge

- Make sure that the charging terminals are not dirty and clean them if they are.
- Make sure that the transmitter has been inserted properly into the charging station and reinsert it if it has not.

### A connection to the network can’t be established

- When linking charging stations, make sure that the LAN cable is connected to the network port of the charging station to which the AC adapter is connected.

### Links can’t be configured with the LINK button

- Make sure that the LINK button is not locked.
- Make sure that the LAN cable is connected securely.
- Make sure that the charging station is on the same network as the receiver.
- Make sure that the charging station is registered to the same system as the receiver on the “Link Configuration” screen in Wireless Manager.
- Link configuration with the LINK button uses IP multicast. Make sure that the receiver and the charging station are using the same multicast IP address.

### Indicator lamps don’t light

- Make sure that “Device Setting” -> “System” -> “LED” is not set to OFF in Wireless Manager.

### Status indicator lamps flash

- Error displays and other such statuses are indicated with the colors of the indicator lamps and the way they flash. Refer to "Indicator lamp displays" (p. 122) for details.

## Wireless Manager

### Devices aren’t detected from Wireless Manager

- Make sure that the LAN cable is connected securely.
- Make sure that the PoE-compatible switching hub is operating properly.
- Check the firewall settings of the PC.
- Make sure that the network settings of the PC are appropriate.
- In the event of changes to the network settings or IP addresses, completely restart each device. Normally, a message indicating that the device will restart appears after settings are changed.
- Restart Wireless Manager.
- If the transmitter isn’t detected, make sure that the transmitter has been inserted properly into the charging station and reinsert it if it has not.
- On Windows, restart the Ethernet adapter after changing network settings. If the IP address still is not updated, restarting Windows may solve the problem.
- On Windows, use the Command Prompt window (or something similar) to execute the ping command to the IP address of the device, checking that communication is possible. If a device isn’t detected even though communication is possible, there may be a problem in the firewall settings or the settings related to the multicast address.

### Device status isn’t applied to Wireless Manager

- Wireless Manager uses IP multicast. Make sure that communication using the multicast IP address/port set on the device is not prohibited in your network environment. When using an IGMP-compatible switch, exercise caution regarding items such as the IGMP settings.
- When using Web Remote Manager (version 1.2.4 or earlier) or Locate—applications made by Audio-Technica—on the same PC as Wireless Manager, change the multicast address port of this system from the default value of “17000” (p. 91). Web Remote Manager and Locate both use port “17000”. Ports “17001”, “17100”, “17200”, and “17300” cannot be used because they are used in Wireless Manager TCP/UDP communication.

- Make sure that another device or application on the same network is not using the same port number as this device.

### The error message “One or more devices are unable to sync with Wireless Manager.” appears when an attempt is made to apply settings to the device

- Make sure that all the devices are connected to the network.
- Make sure that the device is not controlled by another PC.

# Dimensions

## ESW-R4180DAN

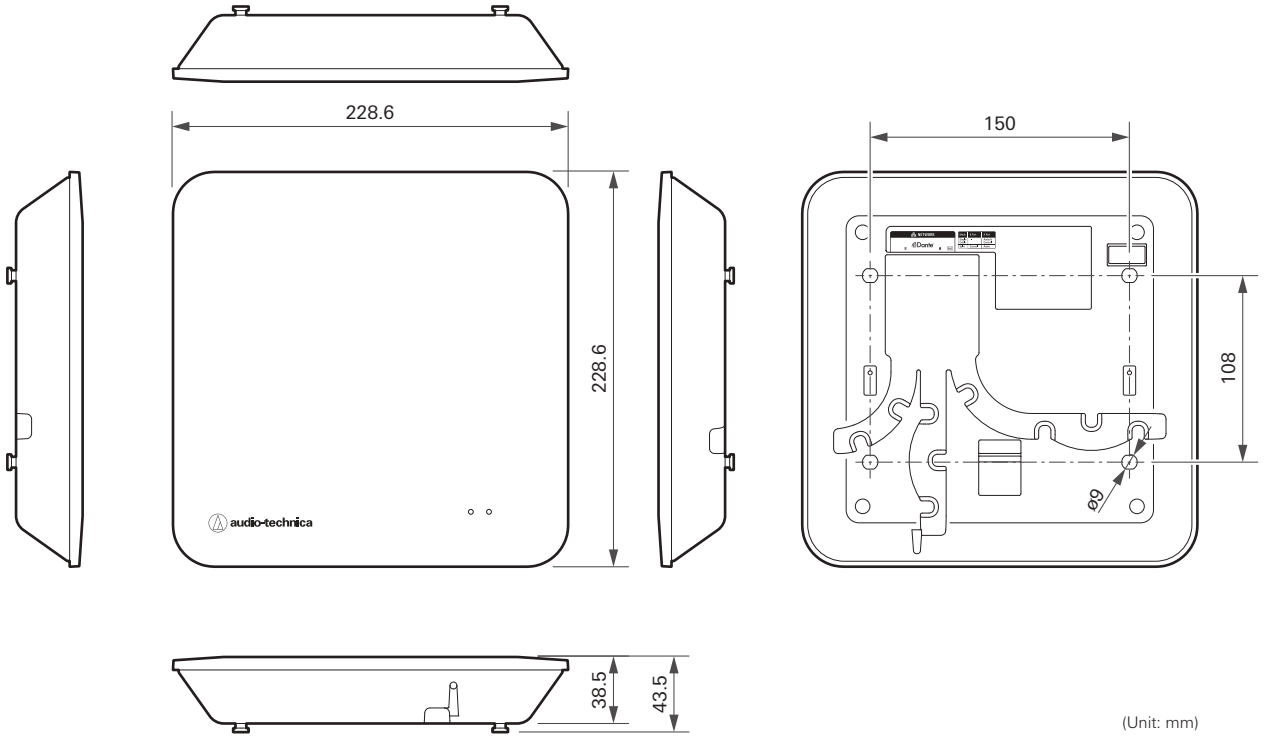


(Unit: mm)

## ESW-T4101

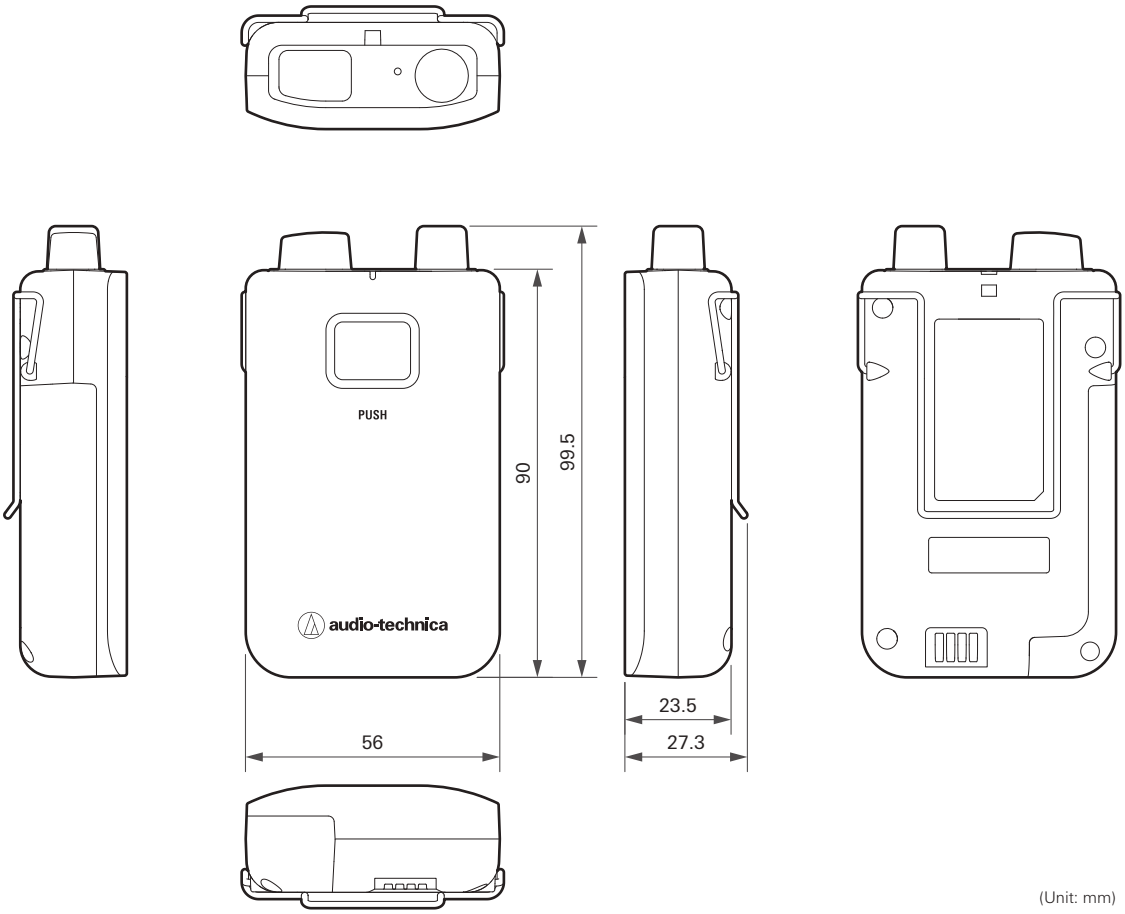


(Unit: mm)

## ESW-T4102/C510

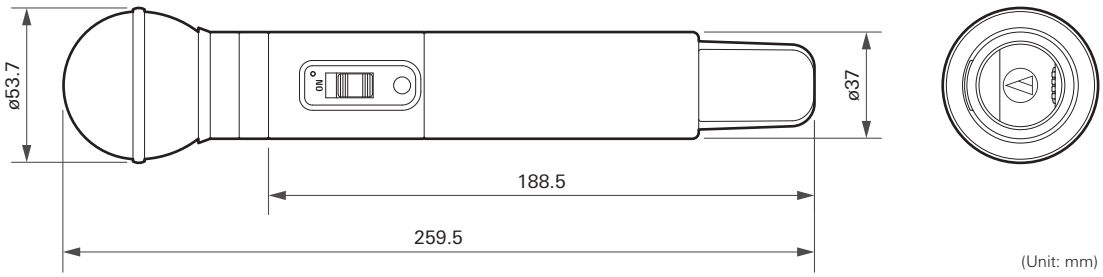


(Unit: mm)

# ESW-T4106

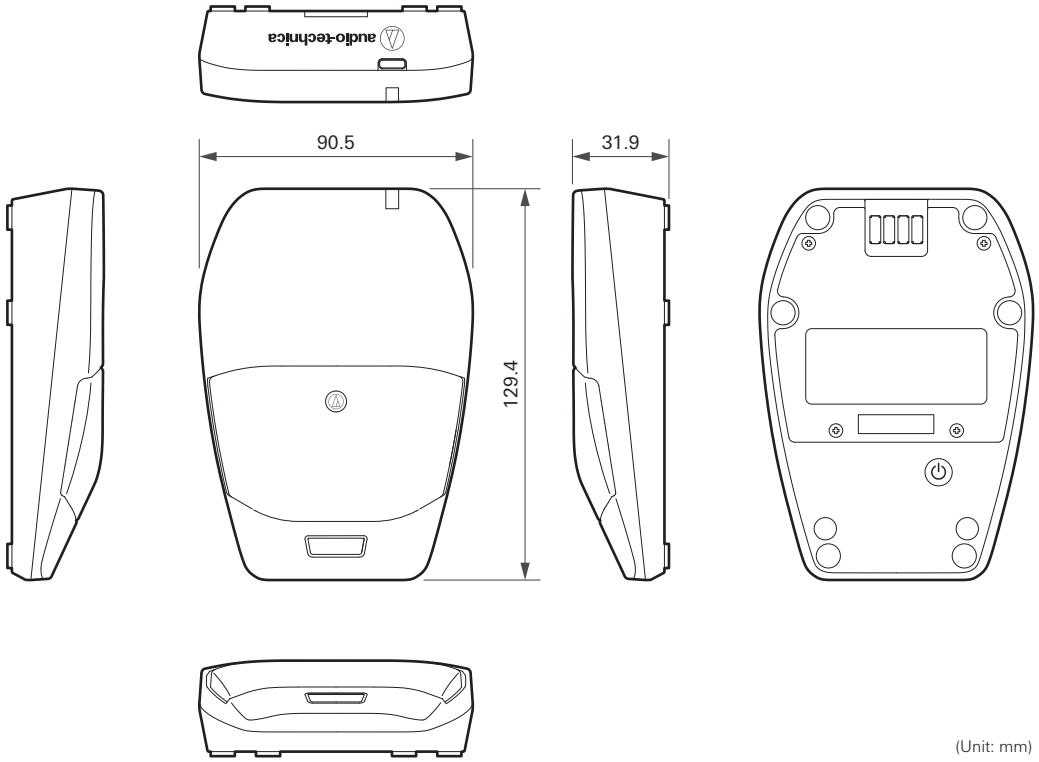


(Unit: mm)

# ESW-T4107

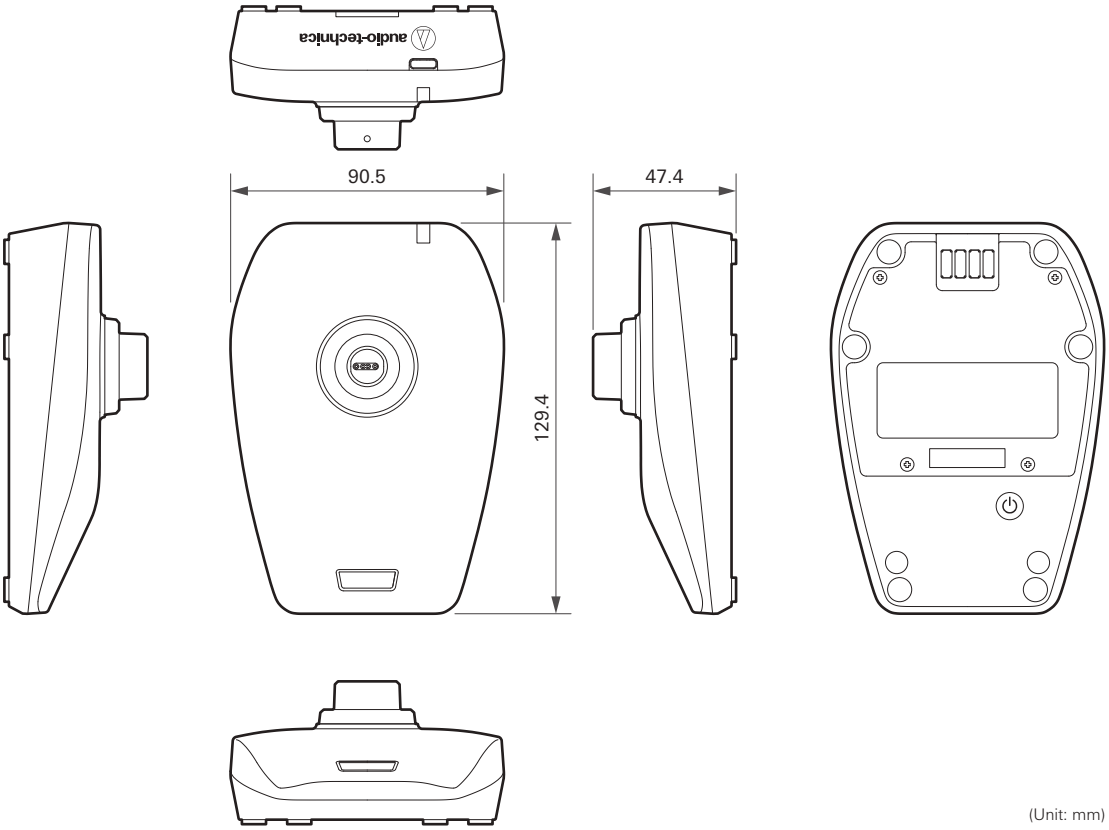


(Unit: mm)

# ESW-CHG4

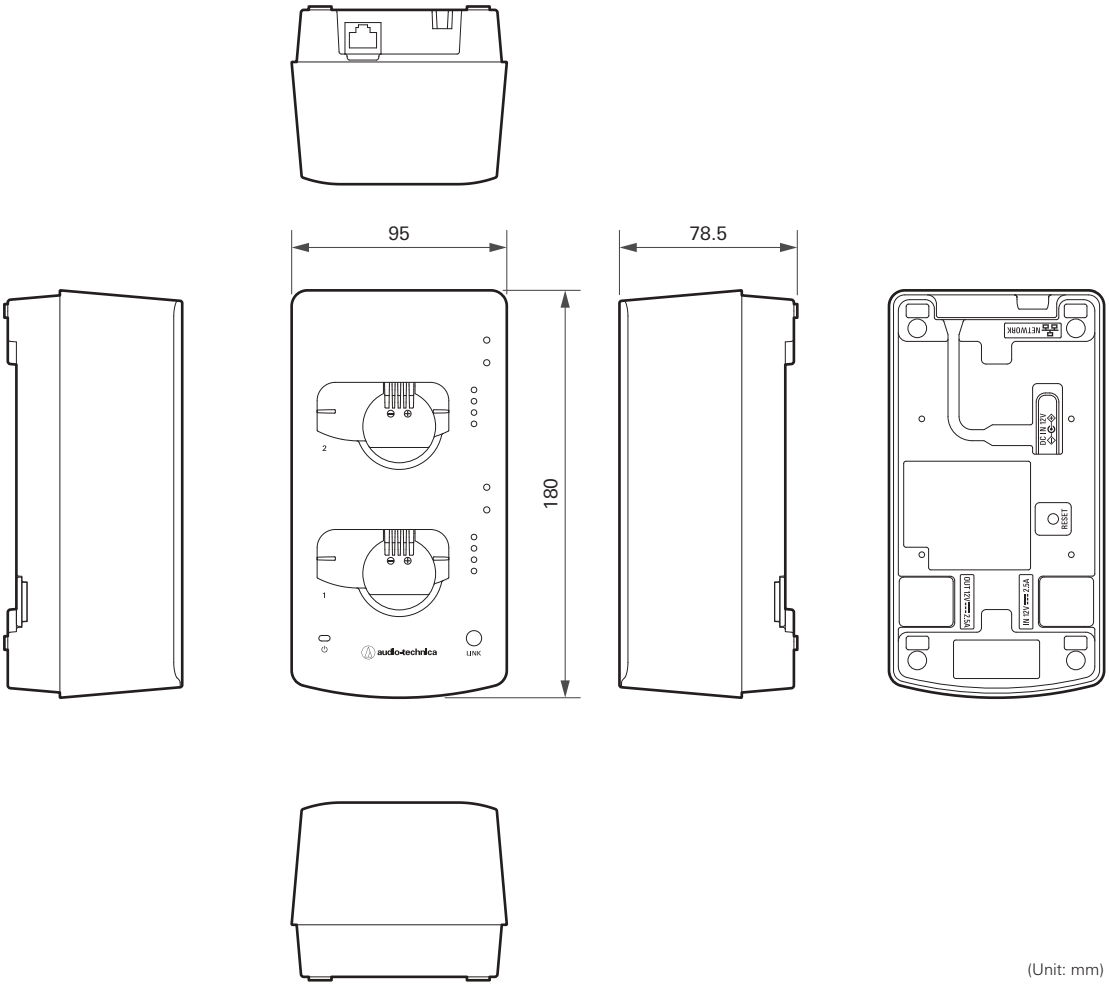


(Unit: mm)

## ESW-CHG5

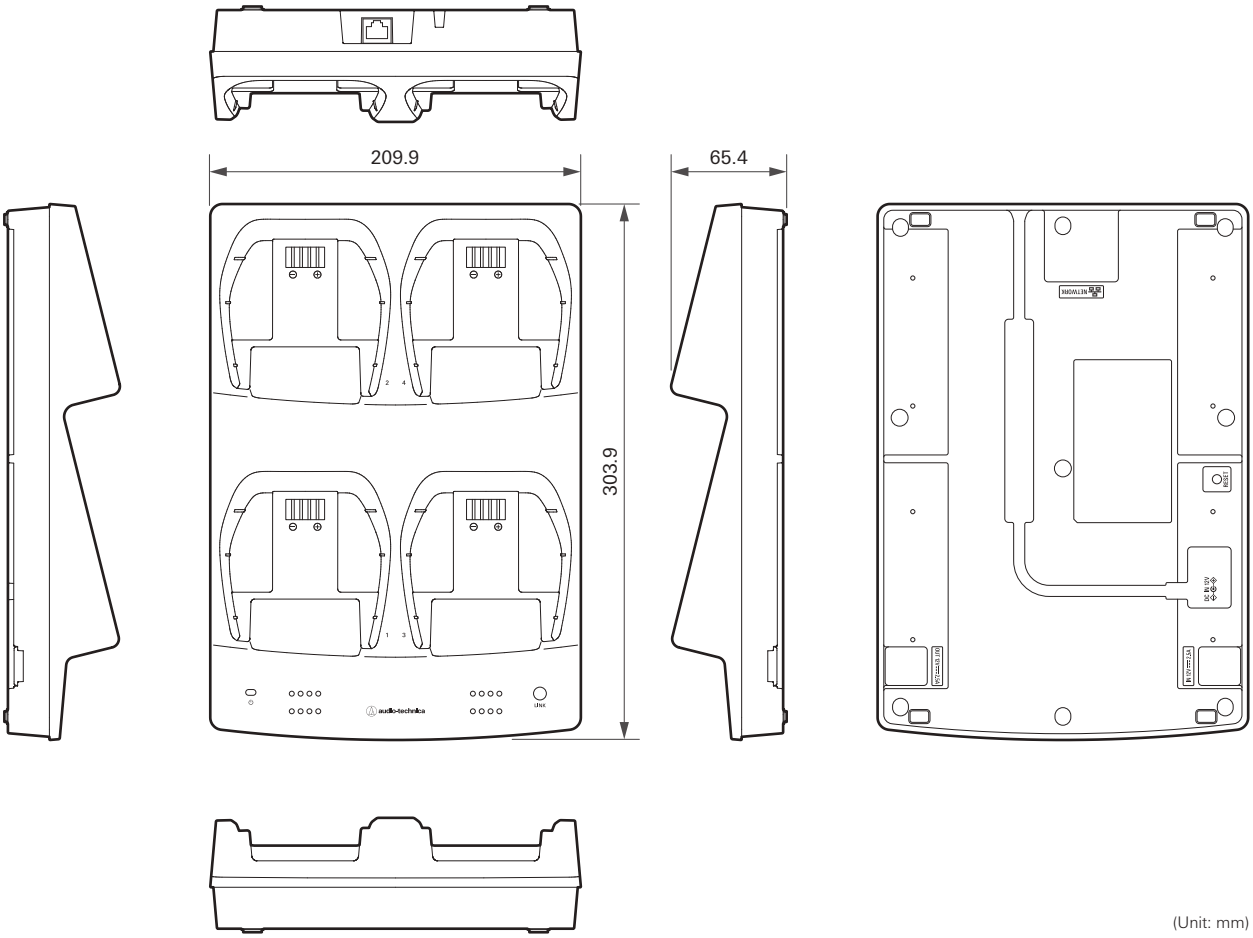


## LI-220

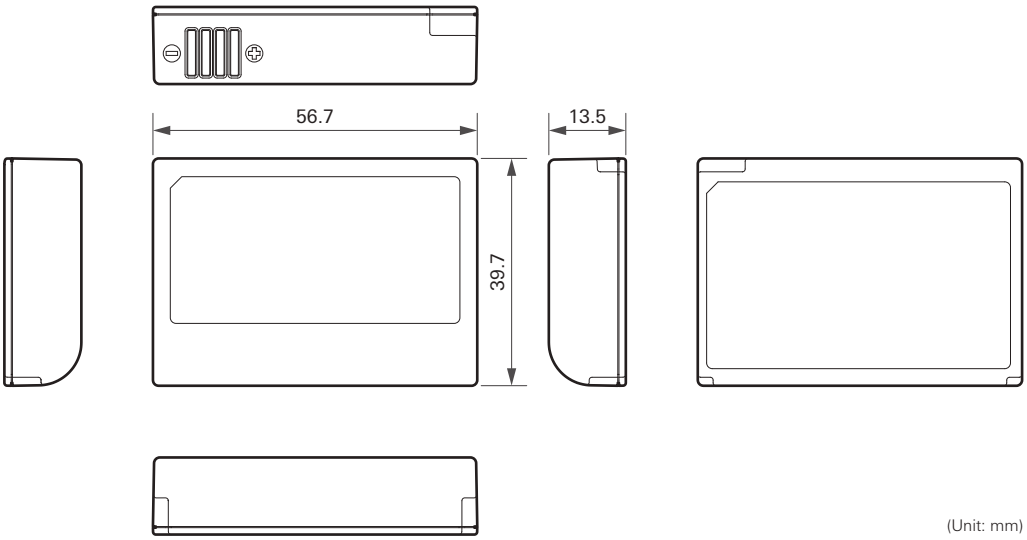

# LI-320

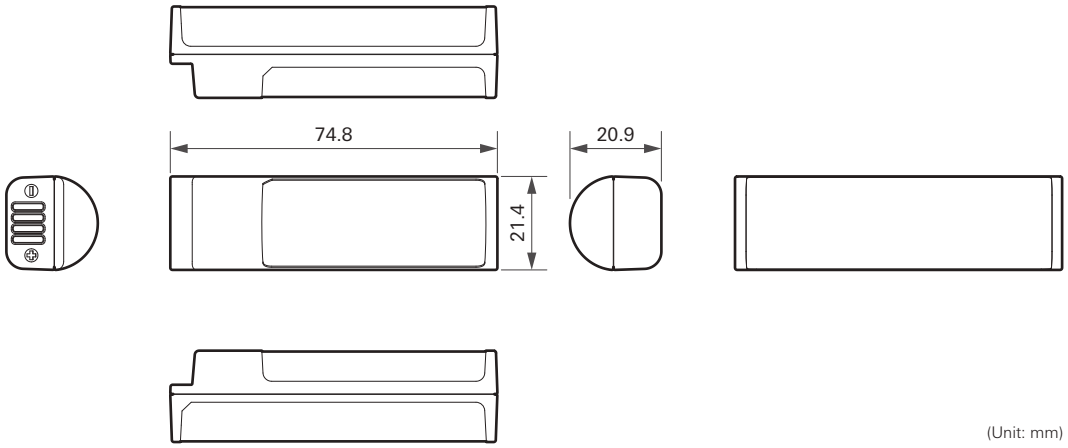


(Unit: mm)

# Specifications

## Overall system specifications

| | |
|---|---|
| **Operating frequencies[1]** | DECT Mode 00 (Europe, Asia): 1,880 to 1,900 MHz<br>DECT Mode 01 (America): 1,920 to 1,930 MHz<br>DECT Mode 03 (Taiwan): 1,880 to 1,895 MHz<br>DECT Mode 21 (Japan): 1,894 to 1,906 MHz<br>DECT Mode 24 (Australia): 1,880 to 1,900 MHz |
| **Dynamic range** | > 105 dB (A-weighted), typical |
| **Total harmonic distortion** | < 1.0% |
| **Operating range[2]** | Max. 100 m (328.1'; with RF Power set to Mid) |
| **System frequency response[3]** | Standard: 20 to 20,000 Hz<br>HD mode: 20 to 20,000 Hz |
| **Receiving system** | True diversity |
| **Latency** | Standard: 16.7 ms typ.<br>HD mode: 24.0 ms typ. |
| **Audio sampling rate** | Standard: 24 bits, 48 kHz<br>HD mode: 24 bits, 48 kHz |
| **Encryption system** | AES256 |
| **RF output power[4]** | Max: 250 mW, High: 100 mW, Mid: 30 mW, Low: 10 mW, Min: 2 mW (switchable) |
| **Maximum simultaneous use[5] [6]** | Standard: 96 channels<br>HD mode: 192 channels |

[1] This product is set to the DECT Mode matching the laws and regulations of the country where it will be used.

[2] Open range environment with no interfering signals.

[3] Depending on microphone element to attach.

[4] Exercise caution regarding the transmitting power to meet local regulations.

[5] In DECT Mode 00/24.

[6] Depending on the region and environment.

# ESW-R4180DAN

| | |
|---|---|
| **Modulation mode** | A-field: π/2-BPSK<br>B-field: π/8-8PSK |
| **RF sensitivity** | < –90 dBm |
| **Network** | Dante: 1 Gbps<br>IP control: 100 Mbps |
| **I/O connector** | Network/Dante: RJ-45 |
| **Power consumption** | 4.8 W |
| **Power supply** | PoE (IEEE 802.3af Class 0) |
| **Operating temperature range** | –10°C to +50°C (14°F to 122°F) |
| **Dimensions** | 228.6 mm (9.0″) × 228.6 mm (9.0″) × 43.5 mm (1.7″) (W × D × H) |
| **Weight (without included accessories)** | 620 g (22 oz) |
| **Included accessory** | Bracket |

# ESW-T4101

| | |
|---|---|
| **Frequency response (internal microphone)** | 20 to 20,000 Hz |
| **Modulation mode** | A-field: π/2-BPSK<br>B-field: π/4-QPSK |
| **Input connection**<br> 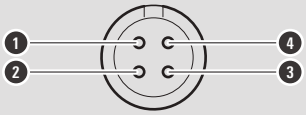 <br> | Four pin locking connector<br>Pin 1: GND<br>Pin 2: MIC DETECTION<br>Pin 3: MIC INPUT<br>Pin 4: DC BIAS +5 V |
| **Battery** | Lithium-ion battery LI-220 (included) |
| **Operating temperature range** | –5°C to +45°C (23°F to 113°F) |
| **Battery life** | 25 hours[1] |
| **Dimensions** | 56 mm (2.2″) × 23.5 mm (0.93″) × 90 mm (3.5″) (W × D × H) |
| **Weight (with battery)** | 112.3 g (4.0 oz) |
| **Included accessory** | Neck strap |

[1] This varies depending on usage conditions.

# ESW-T4102

| | |
|---|---|
| **Modulation mode** | A-field: π/2-BPSK<br>B-field: π/4-QPSK |
| **Microphone capsule** | Interchangeable microphone capsule-compatible |
| **Battery** | Lithium-ion battery LI-320 (included) |
| **Operating temperature range** | –5°C to +45°C (23°F to 113°F) |
| **Battery life** | 35 hours[1] |
| **Dimensions** | ESW-T4102 (without capsule): 188.5 mm (7.4") × 37 mm (1.5") in diameter<br>ESW-T4102/C510: 259.5 mm (10") × 53.7 mm (2.1") in diameter |
| **Weight (with battery)** | ESW-T4102 (without capsule): 205 g (7.2 oz)<br>ESW-T4102/C510: 334 g (12 oz) |
| **Included accessory** | AT8456a Quiet-Flex™ stand clamp, 5/8"-27 male to 3/8"-16 female threaded screw adapter |

[1] This varies depending on usage conditions.

# ESW-T4106

| | |
|---|---|
| **Frequency response** | Omnidirectional: 20 to 18,000 Hz<br>Cardioid: 20 to 18,000 Hz |
| **Modulation mode** | A-field: π/2-BPSK<br>B-field: π/4-QPSK |
| **Microphone polar pattern** | Cardioid, omnidirectional (selectable) |
| **Battery** | Lithium-ion battery LI-220 (included) |
| **Charging time (USB)** | Approx. 2 hours 40 minutes[1] |
| **Operating temperature range** | –5°C to +45°C (23°F to 113°F) |
| **Battery life** | 22 hours[1] |
| **USB charging connector** | USB Type-C (USB 3.0) |
| **Dimensions** | 90.5 mm (3.6") × 129.4 mm (5.1") × 31.9 mm (1.3") (W × D × H) |
| **Weight (with battery)** | 500 g (18 oz) |

[1] This varies depending on usage conditions.

# ESW-T4107

| | |
|---|---|
| **Modulation mode** | A-field: π/2-BPSK<br>B-field: π/4-QPSK |
| **Microphone** | ES Series modular gooseneck microphone-compatible |
| **Battery** | Lithium-ion battery LI-220 (included) |
| **Charging time (USB)** | Approx. 2 hours 40 minutes[1] |
| **Operating temperature range** | –5°C to +45°C (23°F to 113°F) |
| **Battery life** | 17 hours[1] |
| **USB charging connector** | USB Type-C (USB 3.0) |
| **Dimensions** | 90.5 mm (3.6") × 129.4 mm (5.1") × 47.4 mm (1.9") (W × D × H) |
| **Weight (with battery)** | 535 g (19 oz) |

[1] This varies depending on usage conditions.

# ESW-CHG4

| | |
|---|---|
| **Power supply** | 12 V DC, 3.0 A |
| **Charging output** | When charging one to four transmitters: 4.2 V DC, 1.5 A<br>When charging five or six transmitters: 4.2 V DC, 1.1 A<br>When charging seven or eight transmitters: 4.2 V DC, 0.7 A |
| **Power consumption** | When charging two transmitters: 15.6 W<br>When charging eight transmitters in four linked charging stations: 30.6 W |
| **Charging time (ESW-T4101)[1]** | When charging one to four transmitters:<br>Approx. 50 minutes (50% charged), approx. 2 hours (100% charged)<br>When charging five or six transmitters:<br>Approx. 1 hour 10 minutes (50% charged), approx. 2 hours 50 minutes (100% charged)<br>When charging seven or eight transmitters:<br>Approx. 1 hour 40 minutes (50% charged), approx. 3 hours 40 minutes (100% charged) |
| **Charging time (ESW-T4102)[1]** | When charging one to four transmitters:<br>Approx. 1 hour 20 minutes (50% charged), approx. 3 hours (100% charged)<br>When charging five or six transmitters:<br>Approx. 1 hour 40 minutes (50% charged), approx. 4 hours 10 minutes (100% charged)<br>When charging seven or eight transmitters:<br>Approx. 2 hour 20 minutes (50% charged), approx. 5 hours 20 minutes (100% charged) |
| **Network** | IP control: 100 Mbps |
| **Operating temperature range** | 0°C to 40°C (32°F to 104°F) |
| **Dimensions** | 95 mm (3.7") × 180 mm (7.1") × 78.5 mm (3.1") (W × D × H) |
| **Weight** | 532 g (19 oz) |
| **Included accessories** | Link cable, Link plate, Link plate screws, Mic holder |
| **Sold separately** | AC adapter (AD-SA1230XA), AC cord |

[1] This varies depending on usage conditions.

# ESW-CHG5

| | |
|---|---|
| **Power supply** | 12 V DC, 3.0 A |
| **Charging output** | When charging one to four transmitters: 4.2 V DC, 1.5 A<br>When charging five or six transmitters: 4.2 V DC, 1.1 A<br>When charging seven or eight transmitters: 4.2 V DC, 0.7 A |
| **Power consumption** | When charging four transmitters: 30.6 W |
| **Charging time (ESW-T4106/ESW-T4107)[1]** | When charging one to four transmitters:<br>Approx. 50 minutes (50% charged), approx. 2 hours (100% charged)<br>When charging five or six transmitters:<br>Approx. 1 hour 10 minutes (50% charged), approx. 2 hours 50 minutes (100% charged)<br>When charging seven or eight transmitters:<br>Approx. 1 hour 40 minutes (50% charged), approx. 3 hours 40 minutes (100% charged) |
| **Network** | IP control: 100 Mbps |
| **Operating temperature range** | 0°C to 40°C (32°F to 104°F) |
| **Dimensions** | 209.9 mm (8.3") × 303.9 mm (12") × 65.4 mm (2.6") (W × D × H) |
| **Weight** | 866 g (31 oz) |
| **Included accessories** | Link cable, Link plate, Link plate screws |
| **Sold separately** | AC adapter (AD-SA1230XA), AC cord |

[1] This varies depending on usage conditions.

# LI-220

| | |
|---|---|
| **Type** | Lithium ion |
| **Output voltage** | 3.6 V DC |
| **Capacitance** | 2,200 mAh |
| **Dimensions** | 39.7 mm (1.6") × 56.7 mm (2.2") × 13.5 mm (0.53") (W × D × H) |
| **Weight** | 49 g (1.7 oz) |

# LI-320

| | |
|---|---|
| **Type** | Lithium ion |
| **Output voltage** | 3.6 V DC |
| **Capacitance** | 3,200 mAh |
| **Dimensions** | 21.4 mm (0.84") × 74.8 mm (2.9") × 20.9 mm (0.82") (W × D × H) |
| **Weight** | 56 g (2.0 oz) |

- For product improvement, the product is subject to modification without notice.

# Trademarks

- Microsoft® and Windows® are registered trademarks of Microsoft Corporation in the United States and/or other countries.
- Microsoft Windows operating system is indicated in its abbreviated form as Windows.
- Apple and macOS are trademarks of Apple Inc., registered in the U.S. and other countries.
- USB Type-C™ is a trademark of the USB Implementers Forum.
- All other company and product names that appear in this document are trademarks or registered trademarks of their respective companies.

# System diagram

## ESW-R4180DAN

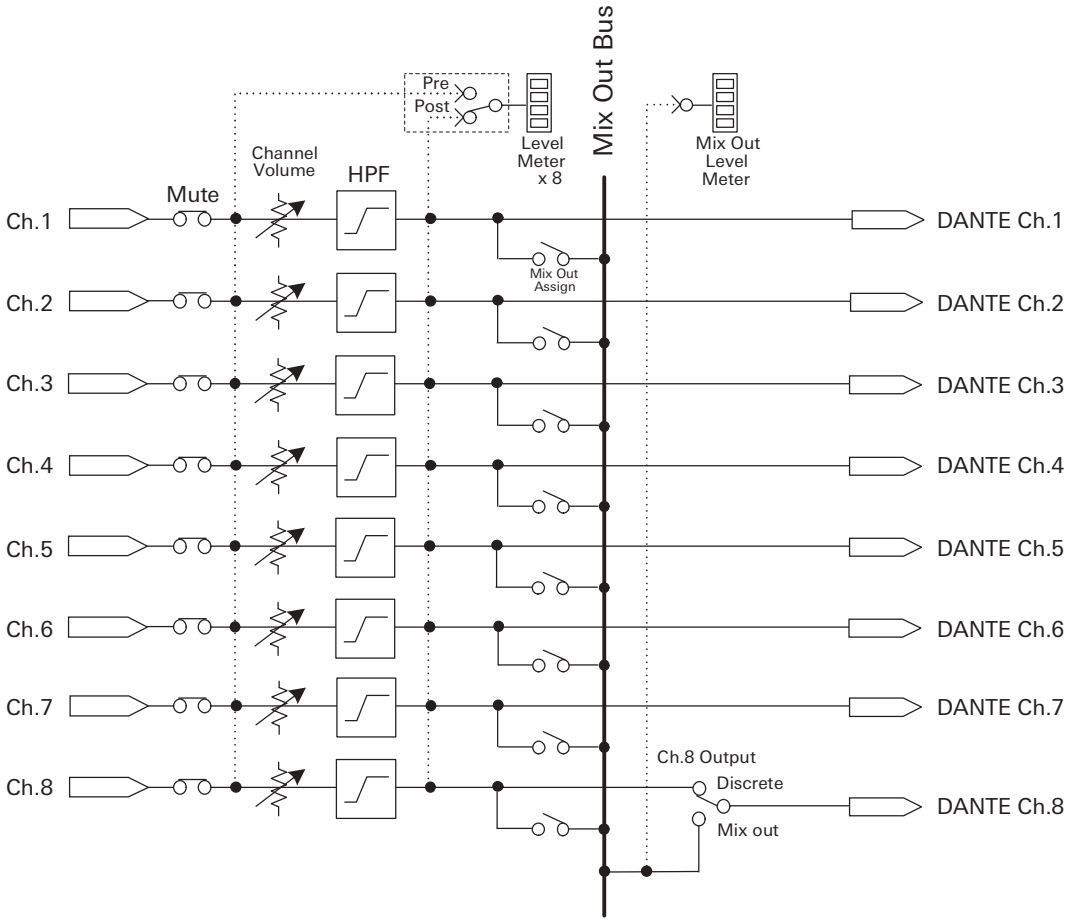

**株式会社オーディオテクニカ**
〒194-8666 東京都町田市西成瀬2-46-1
www.audio-technica.co.jp

**Audio-Technica Corporation**
2-46-1 Nishi-naruse, Machida, Tokyo 194-8666, Japan
www.audio-technica.com
©2022 Audio-Technica Corporation
Global Support Contact: www.at-globalsupport.com

232700650-02-01 ver.1 2022.12.01