Electro-Voice

ELX200 Powered Loudspeakers

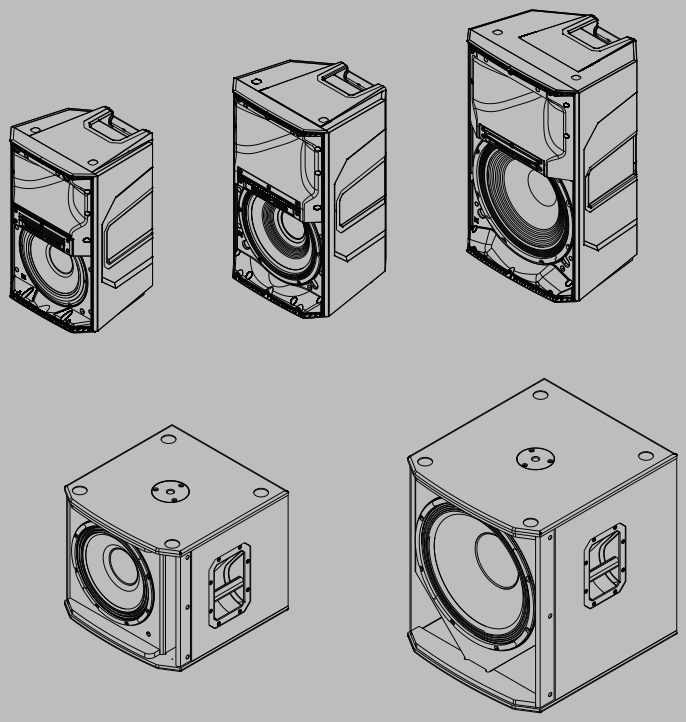

en Installation manual

Table of contents

1	**Safety**	**4**
1.1	Important safety instructions	**4**
1.2	Suspension	**5**
1.3	FCC information	**6**
1.4	Precautions	**6**
1.5	Notices	**6**
2	**Description**	**8**
2.1	Short information	**8**
2.2	System features	**9**
2.3	Quick setup	**11**
3	**Tripod and floor monitor operation**	**13**
3.1	Tripod or pole mount	**13**
3.2	Floor monitor	**15**
4	**Suspension**	**16**
5	**Amplifier DSP**	**19**
5.1	Amplifier DSP controls	**19**
5.2	System status	**21**
5.3	DSP controls	**22**
5.3.1	Full-Range loudspeaker DSP control menu	**22**
5.3.2	Subwoofer DSP control menu	**27**
6	**Pairing the QuickSmart Mobile application**	**32**
7	**Recommended configurations**	**33**
7.1	Daisy-chaining full-range systems	**33**
7.2	MP3 player MONO configuration	**34**
7.3	MP3 player STEREO configuration	**35**
7.4	Using full-range systems as monitors	**36**
7.5	Stacking full-range systems with subwoofers	**37**
8	**Troubleshooting**	**38**
9	**Technical data**	**40**
9.1	Dimensions	**41**
9.2	Frequency response	**42**

1 Safety

1.1 Important safety instructions

 WARNING: TO REDUCE THE RISK OF FIRE OR ELECTRIC SHOCK, DO NOT OVEREXPOSE THIS APPLIANCE TO RAIN OR MOISTURE **AVIS:** RISQUE DE CHOC ELECTRIQUE, NE PAS OUVRIR. **WARNING**: THE MAINS PLUG OR AC INLET IS USED AS A DISCONNECT DEVICE. THE DISCONNECT DEVICE SHALL REMAIN READILY OPERABLE. **WARNING**: CONNECT ONLY TO MAINS SOCKET WITH PROTECTIVE EARTHING CONNECTION. **WARNING**: TO REDUCE THE RISK OF ELECTRIC SHOCK, DO NOT REMOVE COVER (OR BACK) AS THERE ARE NO USER-SERVICABLE PARTS INSIDE. REFER SERVICING TO QUALIFIED PERSONNEL.		The lightning flash with arrowhead symbol, within an equilateral triangle is intended to alert the user to the presence of uninsulated “dangerous voltage” within the product’s enclosure that may be sufficient magnitude to constitute a risk of electric shock to persons.
		The exclamation point within an equilateral triangle is intended to alert the user to the presence of important operating and maintenance (servicing) instructions in the literature accompanying the appliance.
		The asterisk within an equilateral triangle is intended to inform the user to necessary installation or removal instructions regarding equipment or hardware use relating to the system.

1. Read these instructions.
2. Keep these instructions.
3. Heed all warnings.
4. Follow all instructions.
5. Do not use this apparatus near water.
6. Clean only with a dry cloth.
7. Do not block any ventilation openings. Install in accordance with the manufacturer's instructions.
8. Do not install near any heat sources such as radiators, heat registers, stoves, or other apparatus (including amplifiers) that produce heat.
9. Do not defeat the safety purpose of the polarized or grounding-type plug. A polarized plug has two blades with one wider than the other. A grounding type plug has two blades and a third grounding prong. The wide blade or the third prong is provided for your safety. If the provided plug does not fit into your outlet, consult an electrician for replacement of the obsolete outlet.
10. Protect the power cord from being walked on or pinched particularly at plugs, convenience receptacles, and the point where they exit from the apparatus.
11. Only use attachments/accessories specified by the manufacturer.
12. Use only with the cart, stand, tripod, bracket, or table specified by the manufacturer, or with the apparatus. When a cart is used, use caution when moving the cart/apparatus combination to avoid injury from tip-over.
13. Unplug the apparatus during lightning storms or when unused for long periods of time.

14. Refer all servicing to qualified service personnel. Servicing is required when the apparatus has been damaged in any way, such as power-supply cord or plug is damaged, liquid has been spilled or objects have fallen into the apparatus, the apparatus has been exposed to rain or moisture, does not operate normally, or has been dropped.
15. No naked flame sources, such as lighted candles, should be placed on the apparatus.
16. To reduce the risk of fire or electric shock, do not expose this apparatus to rain or moisture. The apparatus should not be exposed to dripping or splashing. Objects filled with liquids, such as vases should not be placed on apparatus.
17. Do not block any ventilation openings. Install in accordance with the manufacturer's instructions.
18. Minimum 60 cm (2 ft) distances around the apparatus for sufficient ventilation.
19. The ventilation should not be impeded by covering the ventilation openings with items, such as newspapers, table-cloths, curtains, etc.
20. To completely disconnect AC power from this apparatus, the power supply cord must be unplugged.

1.2 Suspension

Warning!

Suspending any object is potentially dangerous and should only be attempted by individuals who have a thorough knowledge of the techniques and regulations of suspending objects overhead. Electro-Voice strongly recommends that loudspeakers be suspended taking into account all current national, federal, state, and local laws and regulations. It is the responsibility of the installer to ensure all loudspeakers are safely installed in accordance with all such requirements. When loudspeakers are suspended, Electro-Voice strongly recommends the system be inspected at least once per year or as laws and regulations require. If any sign of weakness or damage is detected, remedial action should be taken immediately. The user is responsible for making sure the wall, ceiling, or structure is capable of supporting all objects suspended overhead. Any hardware used to suspend a loudspeaker not associated with Electro-Voice is the responsibility of others.

Warning!

Do not suspend this product in any other manner than explicitly described in this manual, or Electro-Voice installation guides. Do NOT use handles to suspend the loudspeaker. Handles on Electro-Voice loudspeakers are intended to only be used for temporary transport by people. Items, such as fiber rope, wire rope, cables, or other types of materials cannot be used to suspend loudspeaker from the handles.

1.3 FCC information

IMPORTANT: Do not modify this unit! Changes or modifications not expressly approved by the manufacturer could void the user's authority, granted by the FCC, to operate the equipment.

Notice!

This equipment has been tested and found to comply with the limits for a Class B digital device, pursuant to Part 15 of the FCC Rules. These limits are designed to provide reasonable protection against harmful interference in a residential installation. This equipment generates, uses and can radiate radio frequency energy and, if not installed and used in accordance with the instructions, may cause harmful interference to radio communications. However, there is no guarantee interference will not occur in a particular installation.

If this equipment does cause harmful interference to radio or television reception or receive audible interference from radio, television or communications equipment, which can be determined by turning the equipment off and on. The user is encouraged to try to correct the interference by one or more of the following measures:

- Reorient or relocate the receiving antenna.
- Increase the separation between the equipment and receiver.
- Connect the equipment into an outlet on a circuit different from that to which the receiver is connected.
- Consult the dealer or an experienced radio/TV/communications equipment technician.

1.4 Precautions

	If an Electro-Voice loudspeaker is used outdoors on a sunny day, place the loudspeaker in a shaded or covered area. The loudspeaker amplifiers have protection circuits that temporarily shut the loudspeaker off when extremely high temperatures are reached. This can happen on hot days when the loudspeaker is in direct sunlight.
	Do not use Electro-Voice loudspeakers in an environment where temperatures are below 0°C (32°F) or exceed +35°C (95°F).
	Never expose an Electro-Voice loudspeaker to rain, water, or high moisture.
	Electro-Voice loudspeakers are easily capable of generating sound pressure levels sufficient to cause permanent hearing damage to anyone within normal coverage distance. Caution should be taken to avoid prolonged exposure to sound pressure levels exceeding 90 dB.

1.5 Notices

Old electrical and electronic appliances

Electrical or electronic devices that are no longer serviceable must be collected separately and sent for environmentally compatible recycling (in accordance with the European Waste Electrical and Electronic Equipment Directive).

To dispose of old electrical or electronic devices, you should use the return and collection systems put in place in the country concerned.

Copyright and disclaimer
All rights reserved. No part of this document may be reproduced or transmitted in any form by any means, electronic, mechanical, photocopying, recording, or otherwise, without the prior written permission of the publisher. For information on getting permission for reprints and excerpts, contact Electro-Voice.
All content including specifications, data, and illustrations in this manual are subject to change without prior notice.

Notice!
Bluetooth® is available in select countries.
Contact your nearest Electro-Voice dealer or Electro-Voice distributor for more information.

The Bluetooth® word mark and logos are registered trademarks owned by Bluetooth SIG, Inc. and any use of such marks by Bosch Security Systems, Inc. is under license. Other trademarks and trade names are those of their respective owners.

2 Description

Thank you for choosing an Electro-Voice powered loudspeaker system. Please take time to consult the manual to understand all the features built into your EV system and fully utilize its performance capabilities.

ROCK SOLID SOUND: Electro-Voice ELX200 portable loudspeakers
The ELX200 series is the newest member of the best-selling Electro-Voice portable loudspeaker family. Positioned above ZLX and below the EKX series, the ELX200 series features ten models (five powered and five passive), including 10-inch, 12-inch and 15-inch two-way models, and 12-inch and 18-inch subwoofers.

Every aspect of ELX200 is designed for ideal results as part of the whole - the acoustical, electrical and mechanical components all work together seamlessly. The full-range models feature a low profile form factor designed with a high-spec composite enclosure to balance weight, manageability, as well as structural integrity. The subwoofers pack powerful low-frequency output into a surprisingly compact footprint, and feature tuned 15 mm thick wood enclosures with a premium top-coat finish. The proprietary features that have made the other members of the EV portable speaker family a go-to for best-in-class performance are also present: Class-D amplifier design (1200 W), Quick**Smart**DSP, and the Signal Synchronized Transducers (SST) waveguide concept.

The new Quick**Smart** Mobile wireless control and monitoring application, using Bluetooth® Low Energy (BTLE) technology, allows intuitive system control, configuration and monitoring of up to six powered ELX200 loudspeakers simultaneously. Receive alerts when your system is being overdriven, and control your system while in front of your speakers, not behind. Bluetooth® is available in select countries.

EV's industry-leading quality and testing procedures yield efficient transducer design and meaningful specs, resulting in components that deliver accurate, linear response at the system’s highest output levels. Translation: loud and clear all the way up to the limit. Unified in one of the strongest full-range composite enclosures ever built by EV. The ELX200 is established as the new benchmark for toughness - both acoustically and physically; maximum efficiency with maximum toughness.

2.1 Short information

The following table lists products in a family, with CTN (Commercial Type Number) and identifying product name DESCRIPTION.

CTN	Description
ELX200-10P-US	10" 2-way powered speaker, US cord
ELX200-12P-US	12" 2-Way powered speaker, US cord
ELX200-15P-US	15" 2-Way powered speaker, US cord
ELX200-12SP-US	12" powered subwoofer, US cord
ELX200-18SP-US	18" powered subwoofer, US cord
ELX200-10P-EU	10" 2-way powered speaker, EU cord
ELX200-12P-EU	12" 2-Way powered speaker, EU cord

CTN	Description
ELX200-15P-EU	15" 2-Way powered speaker, EU cord
ELX200-12SP-EU	12" powered subwoofer, EU cord
ELX200-18SP-EU	18" powered subwoofer, EU cord
ELX200-10P-AP	10" 2-way powered speaker, AP
ELX200-12P-AP	12" 2-Way powered speaker, AP
ELX200-15P-AP	15" 2-Way powered speaker, AP
ELX200-12SP-AP	12" powered subwoofer, AP
ELX200-18SP-AP	18" powered subwoofer, AP
ELX200-10P-GL	10" 2-way powered speaker, Global, No BT
ELX200-12P-GL	12" 2-way powered speaker, Global, No BT
ELX200-15P-GL	15" 2-way powered speaker, Global, No BT
ELX200-12SP-GL	12" powered subwoofer, Global, No BT
ELX200-18SP-GL	18" powered subwoofer, Global, No BT
ELX200-10P-W	10" 2-way powered speaker, white
ELX200-12P-W	12" 2-Way powered speaker, white
ELX200-15P-W	15" 2-Way powered speaker, white
ELX200-12SP-W	12" powered subwoofer, white
ELX200-18SP-W	18" powered subwoofer, white

2.2 System features

ELX200-10P — 10" two-way powered loudspeaker system

- EV Quick**Smart** Mobile application: quickly and wirelessly configure, control and monitor up to six ELX200 loudspeakers simultaneously, and receive immediate notification during critical performance conditions. Bluetooth® is available in select countries.
- Quick**Smart**DSP features best-in-class processing. Easy setup via four presets, sub/top system-match, three-band EQ, five user-programmable presets, visual monitoring of limiter status, input level control and meters, and master volume control to optimize gain structure, all via LCD.
- System reliability verified with over 500 hours of abuse and endurance testing. High-efficiency 1200 W Class-D power amplifier delivers up to 130 dB peak SPL utilizing transducers designed and engineered by EV.
- Professional-grade hardware: three M10 threaded mounting points for forged eyebolts, integrated pole-mounts and the proven ZLX two-handle design for easy lifting.

ELX200-12P — 12" two-way powered loudspeaker system

- EV Quick**Smart** Mobile application: quickly and wirelessly configure, control and monitor up to six ELX200 loudspeakers simultaneously, and receive immediate notification during critical performance conditions. Bluetooth® is available in select countries.

- Quick**Smart**DSP features best-in-class processing. Easy setup via four presets, sub/top system-match, three-band EQ, five user-programmable presets, visual monitoring of limiter status, input level control and meters, and master volume control to optimize gain structure, all via LCD.
- System reliability verified with over 500 hours of abuse and endurance testing. High-efficiency 1200 W Class-D power amplifier delivers up to 130 dB peak SPL utilizing transducers designed and engineered by EV.
- EV-patented Signal Synchronized Transducers (SST) waveguide design provides precise and consistent coverage, minimal distortion, and maximized acoustical loading.
- Professional-grade hardware: three M10 threaded mounting points for forged eyebolts, integrated pole-mounts and the proven ZLX three-handle design for easy lifting.

ELX200-15P — 15" two-way powered loudspeaker system

- EV Quick**Smart** Mobile application: quickly and wirelessly configure, control and monitor up to six ELX200 loudspeakers simultaneously, and receive immediate notification during critical performance conditions. Bluetooth® is available in select countries.
- Quick**Smart**DSP features best-in-class processing. Easy setup via four presets, sub/top system-match, three-band EQ, five user-programmable presets, visual monitoring of limiter status, input level control and meters, and master volume control to optimize gain structure, all via LCD.
- System reliability verified with over 500 hours of abuse and endurance testing. High-efficiency 1200 W Class-D power amplifier delivers up to 132 dB peak SPL utilizing transducers designed and engineered by EV.
- EV-patented Signal Synchronized Transducers (SST) waveguide design provides precise and consistent coverage, minimal distortion, and maximized acoustical loading.
- Professional-grade hardware: three M10 threaded mounting points for forged eyebolts, integrated pole-mounts and the proven ZLX three-handle design for easy lifting.

ELX200-12SP — 12" powered subwoofer system

- EV Quick**Smart** Mobile application: quickly and wirelessly configure, control and monitor up to six ELX200 loudspeakers simultaneously, and receive immediate notification during critical performance conditions. Bluetooth® is available in select countries.
- Quick**Smart**DSP features best-in-class processing. Easy setup via three presets, sub/top system-match, five user-programmable presets, visual monitoring of limiter status, input level control and meters, and master volume control to optimize gain structure, all via LCD.
- System reliability verified with over 500 hours of abuse and endurance testing. High-efficiency 1200 W Class-D power amplifier delivers up to 129 dB peak SPL utilizing ultra-efficient, high-sensitivity transducer designed and engineered by EV.
- Ideal for portable and installed applications. Professional-grade hardware: integrated M20 threaded pole mount plate and two-handle design for easy lifting.

ELX200-18SP — 18" powered subwoofer system

- EV Quick**Smart** Mobile application: quickly and wirelessly configure, control and monitor up to six ELX200 loudspeakers simultaneously, and receive immediate notification during critical performance conditions. Bluetooth® is available in select countries.

- Quick**Smart**DSP features best-in-class processing. Easy setup via three presets, sub/top system-match, five user-programmable presets, visual monitoring of limiter status, input level control and meters, and master volume control to optimize gain structure, all via LCD.
- System reliability verified with over 500 hours of abuse and endurance testing. High-efficiency 1200 W Class-D power amplifier delivers up to 132 dB peak SPL utilizing ultra-efficient, high-sensitivity transducer designed and engineered by EV.
- Ideal for portable and installed applications. Professional-grade hardware: integrated M20 threaded pole mount plate and two-handle design for easy lifting.

2.3 Quick setup

Full-Range loudspeaker

Models: ELX200-10P, ELX200-12P, and ELX200-15P

To set up a full-range loudspeaker, do the following:

Step	Illustration
1. Connect the AC power cord from a grounded line receptacle to the MAINS IN.	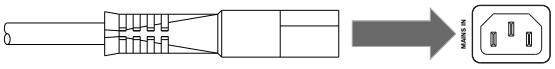
2. Connect the XLR, TRS, or RCA cable from an audio source to INPUT 1 or INPUT 2.	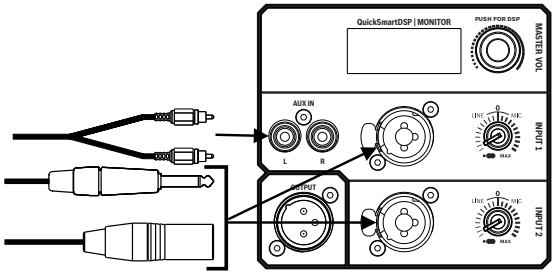
3. Adjust the input gain to -∞ (infinity).	
4. Switch POWER to ON.	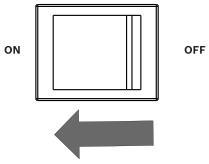
5. From the DSP home screen, increase the input gain to the desired sound output.	
6. Adjust the MASTER VOL knob to the desired volume.	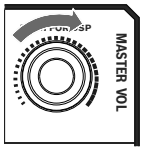

Subwoofer

Models: ELX200-12SP and ELX200-18SP

To set up a subwoofer, do the following:

Step	Illustration
1. Connect the AC power cord from a grounded line receptacle to the MAINS IN.	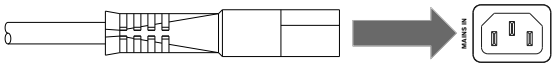
2. Connect the XLR or TRS cable from an audio source to INPUT 1 or INPUT 2.	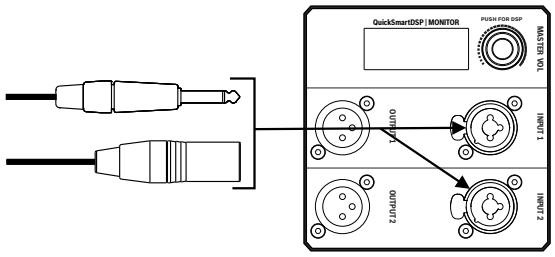
3. Switch POWER to ON.	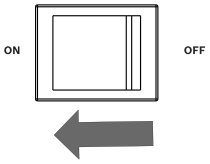
4. Adjust the MASTER VOL knob to the desired volume.	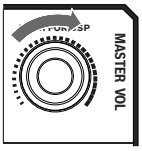

3 Tripod and floor monitor operation

3.1 Tripod or pole mount

ELX200-10P, ELX200-12P, and ELX200-15P loudspeakers mount on a tripod stand or on a pole above a subwoofer.

Mounting a loudspeaker on a tripod stand

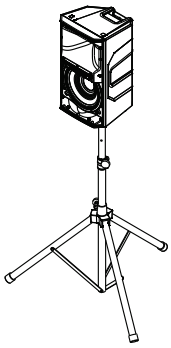

Figure 3.1: Full-Range models on a tripod stand

Caution!
Tripod is not evaluated for safety with this loudspeaker. Check the specifications of the tripod stand to be certain it is capable of supporting the weight of the loudspeaker.

Caution!
We recommend that two or more persons lift and place heavier loudspeakers. Single person lift and placement of heavier loudspeakers could cause injury.

To mount a loudspeaker on a tripod stand, do the following:

1. Place the tripod stand on a level and stable surface.
   – Fully extend the legs on the tripod stand.
   – Do not compromise the tripod stand's structural integrity by trying to make the stand taller.
   – Do not attempt to mount more than one loudspeaker on a stand designed for a single loudspeaker.
2. Lift the loudspeaker using two hands.
3. Set the pole cup located on the bottom of the loudspeaker onto the pole.
4. Tighten the thumb screw (A) to secure the loudspeaker to the pole.
   The thumb screw is only available on the 12" and 15" full-range loudspeaker models. The 10" full-range loudspeaker does not have a thumb screw.

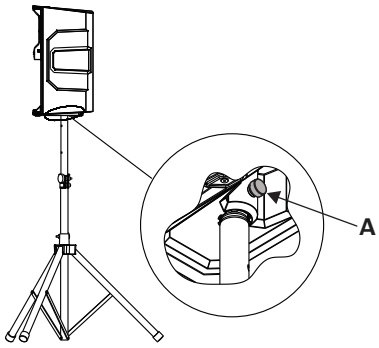

Mounting a loudspeaker on a pole

Caution!
We recommend that two or more persons lift and place heavier loudspeakers. Single person lift and placement of heavier loudspeakers could cause injury.

To mount a loudspeaker on a pole, do the following:

1. Place the subwoofer on a level and stable surface.
2. Insert the M20 threaded pole into the combo pole cup on the top of the subwoofer.
3. Turn the M20 threaded pole clockwise to secure the pole to the subwoofer.

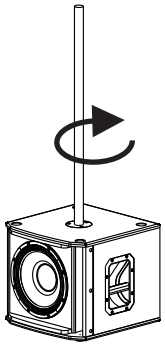

4. Lift the loudspeaker using two hands.
5. Set the pole cup located on the bottom of the loudspeaker onto the pole.
6. Tighten the thumb screw to secure the loudspeaker to the pole.
   The thumb screw is only available on the 12" and 15" full-range loudspeaker models. The 10" full-range loudspeaker does not have a thumb screw.

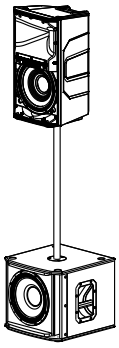

Refer to

– *DSP controls, page 22*

3.2 Floor monitor

ELX200-10P, ELX200-12P, and ELX200-15P loudspeakers may be used as a floor monitor by placing the loudspeaker on the integral monitor angle.

To set up a loudspeaker as a floor monitor, do the following:

1. Place the loudspeaker on a level and stable surface.
2. Safely route cables to prevent injury to performers, production crew, and audience members.

Notice!

Secure cables with wire ties or tape whenever possible.

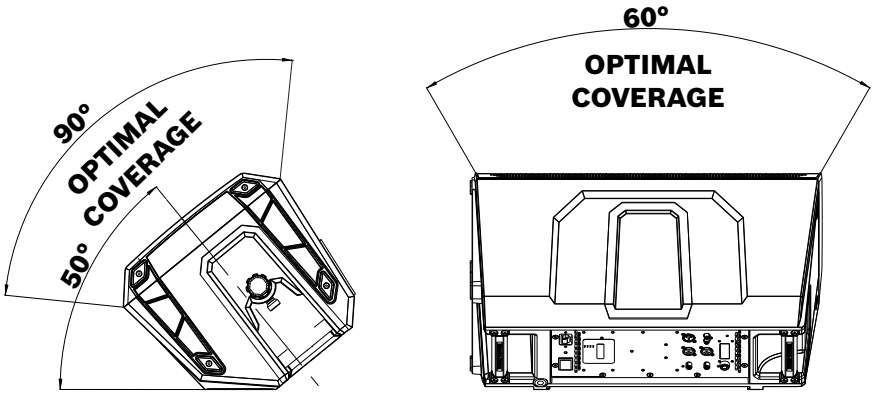

Figure 3.2: Optimum coverage in monitor position (side view left and front view right)

Refer to

– *Full-Range loudspeaker DSP control menu, page 22*

4 Suspension

The ELX200 enclosures have three M10 threaded points; two points on top of the enclosure and one point on the bottom. Forged shoulder eyebolts rated for overhead suspension may be used to suspend an individual loudspeaker, such as the EBK1-M10-3PACK accessory.

Warning!

Suspending any object is potentially dangerous and should only be attempted by individuals who have a thorough knowledge of the techniques and regulations of suspending objects overhead. Electro-Voice strongly recommends that loudspeakers be suspended taking into account all current national, federal, state, and local laws and regulations. It is the responsibility of the installer to ensure all loudspeakers are safely installed in accordance with all such requirements. When loudspeakers are suspended, Electro-Voice strongly recommends the system be inspected at least once per year or as laws and regulations require. If any sign of weakness or damage is detected, remedial action should be taken immediately. The user is responsible for making sure the wall, ceiling, or structure is capable of supporting all objects suspended overhead. Any hardware used to suspend a loudspeaker not associated with Electro-Voice is the responsibility of others.

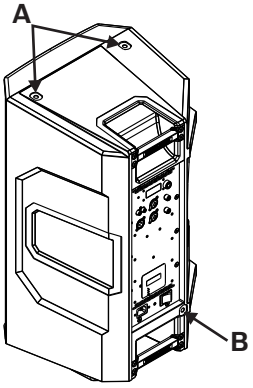

Figure 4.1: Suspension points (A top, B bottom)

Prior to use, inspect the suspension points and associated hardware for any cracks, deformations, broken welds, corrosion, missing or damaged components which could reduce the suspension points strength. Replace any damaged hardware. Never exceed the limitations or maximum recommended load intended for the suspension points. As an added safety measure, it is suggested the user install an extra suspension point back to the building structural supports. This redundant safety point should have as little slack as possible (less than one inch is preferable). Prior to each use, inspect the loudspeaker enclosures for any cracks, deformations, missing or damaged components, which could reduce enclosure strength. Replace any loudspeaker systems that are damaged or missing hardware.

Installing the eyebolts

To install the eyebolts, do the following:

1. Remove the three fly point covers from the suspension points.

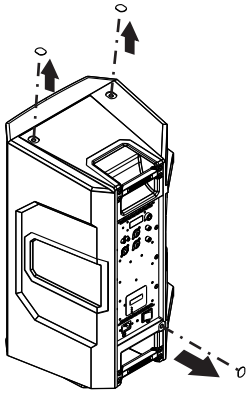

2. Install M10 eyebolts and washers into the suspension points.

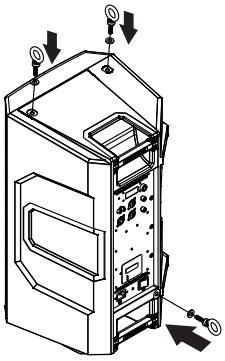

Warning!

Eyebolts must be fully seated and oriented in the plane of pull. Always use washers under the eyebolt to distribute the load on the enclosure.

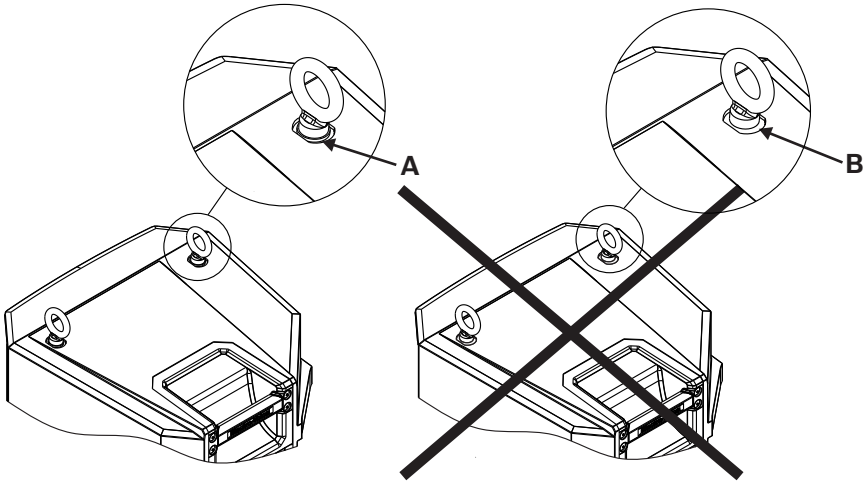

Figure 4.2: Eyebolt shown with washers (A) and without washers (B)

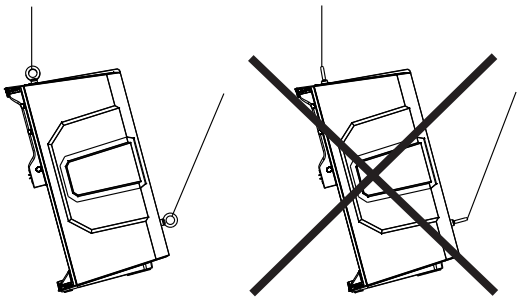

Figure 4.3: Eyebolts shown orientated in the plane of pull (left correct, right incorrect)

Warning!
Never exceed the limitations or maximum recommended working load for Electro-Voice loudspeakers.
Disregarding this warning could result in serious injury or death.

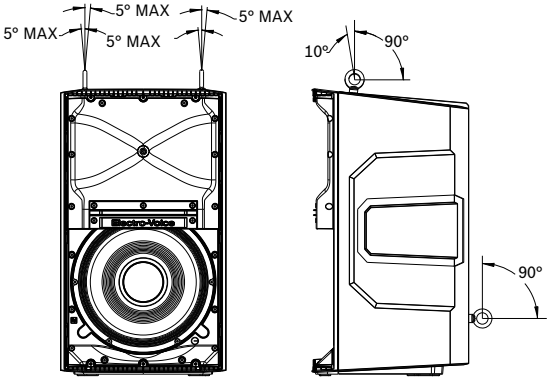

Figure 4.4: Maximum working load - vertical orientation 50 lb per suspension point

Warning!
Never suspend ELX200 Series loudspeakers in a vertical column array.
Disregarding this warning could result in serious injury or death.

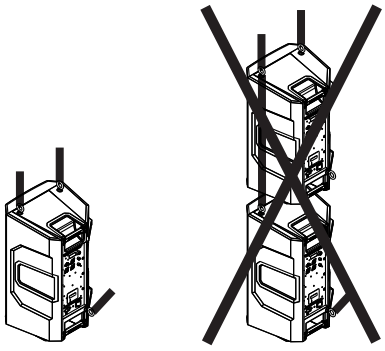

Figure 4.5: Loudspeaker vertical suspension (Correct, left; Incorrect, right)

Refer to

– *Full-Range loudspeaker DSP control menu, page 22*

5 Amplifier DSP

5.1 Amplifier DSP controls

The amplifier has a combination of controls and connectors to ensure the most versatile loudspeaker system.

Full-Range loudspeaker control and monitoring interface

The full-range loudspeaker DSP control menu selections are available for the ELX200-10P, ELX200-12P, and ELX200-15P.

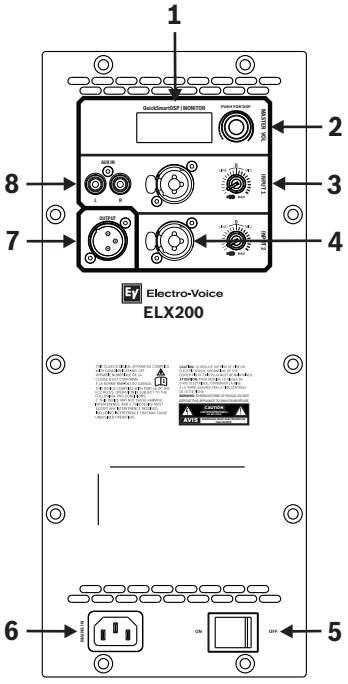

Figure 5.1: Full-Range loudspeaker amplifier panel

1. **LCD** – DSP control and monitoring interface.
2. **MASTER VOL** – Adjusts the sound level.
   DSP – Scroll through the menu and select the available choices. Push the MASTER VOL knob to enter the DSP menu.
3. **INPUT LEVEL** - Level control for adjusting the individual inputs' level. The 12 o'clock position is unity gain (no gain or attenuation), the range to the left of zero is for adjusting line level sources, and the range to the right of zero is for adjusting microphone levels. LINE and MIC input level control is available for both INPUT 1 and INPUT 2.
4. **INPUT** – Balanced input for the connection of signal sources like mixing consoles, instruments, or microphones. Connections can be established using ¼ inch TRS or XLR connectors.
5. **POWER** – AC switch for switching the power ON or OFF. The LCD screen lights up when the power is turned ON, after approximately 3 seconds.
6. **MAINS IN** – AC connection is established via an IEC-connector.
7. **OUTPUT** – XLR output sends the mix of both input signals to another loudspeaker or subwoofer. INPUT LEVEL controls the signal level to OUTPUT. The MASTER VOL or DSP control settings do not affect OUTPUT.
8. **AUX INPUT** – Stereo unbalanced RCA inputs for connecting external audio media devices, such as MP3 players. Both RCA inputs are summed and can be controlled with INPUT 1 level. The inputs can be used simultaneously with XLR/TRS INPUT 1.

Subwoofer control and monitoring interface

The subwoofer DSP control menu selections are available for the ELX200-12SP and ELX200-18SP.

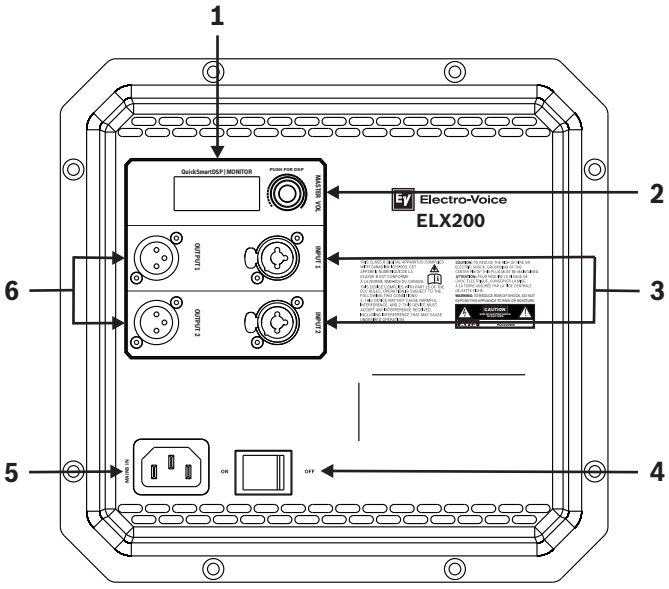

Figure 5.2: Subwoofer amplifier panel

1. **LCD** – DSP control and monitoring interface.
2. **MASTER VOL** – Adjusts the sound level.
   DSP – Scroll through the menu and select the available choices. Push the MASTER VOL knob to enter the DSP menu.
3. **INPUT** – Balanced input for the connection of signal sources like mixing consoles, instruments, or microphones. Connections can be established using ¼ inch TRS or XLR connectors.
4. **POWER** – AC switch for switching the power ON or OFF. The LCD screen lights up when the power is turned ON, after approximately 3 seconds.
5. **MAINS IN** – AC connection is established via an IEC-connector.
6. **OUTPUT** – XLR output sends the input signal to another loudspeaker or subwoofer. INPUT 1 is linked to OUTPUT 1 and INPUT 2 is linked to OUTPUT 2. The MASTER VOL or DSP control settings do not affect OUTPUT.

5.2 System status

Normal

Figure 5.3: Normal system status home screen with Bluetooth® status

1. **LEVEL** – Indicates the master gain of the system in dB. The range is from mute to +10 dB, in 1 dB increments.
2. **IN1** – VU meter displays the signal level of INPUT 1 into the amplifier INPUT 1 XLR connector. IN1 and IN2 are independent of each other.
3. **IN2** – VU meter displays the signal level of INPUT 2 into the amplifier INPUT 2 XLR connector. IN1 and IN2 are independent of each other.
4. **C** - Control app; the available options are:
   OFF - DISABLED
   FLASHING - PAIRING MODE
   SOLID - CONNECTED
5. **1** - Indicates the selected preset number. There are five user defined presents available.
6. **E** - Indicates the preset is not saved. When the preset is saved the E is not displayed.

Notice!
Bluetooth® is available in select countries.
Contact your nearest Electro-Voice dealer or Electro-Voice distributor for more information.

System protection

System protection limiters indicate when a system is exceeding recommended usage by indicating CLIP or LIMIT on the LCD display.

CLIP

Figure 5.4: Clipping system status

CLIP indicates the signal to the loudspeaker is too high, resulting in a clipped signal into the loudspeaker. If CLIP is shown, reduce the input gain knob and/or the signal on the mixer or source equipment.

LIMIT

OR

Figure 5.5: Limit system status

LIMIT protects the loudspeaker from short-term peaks which can cause distortion. When LIMIT is shown small on the screen, the limiter is active but keeps distortion under control. The large LIMIT indicates the sound is negatively affected. Reducing the output volume (MASTER VOL) is strongly recommended when the large limit indication is shown.

5.3 DSP controls

An integrated DSP control menu allows the user to select multiple DSP system settings on the loudspeaker.

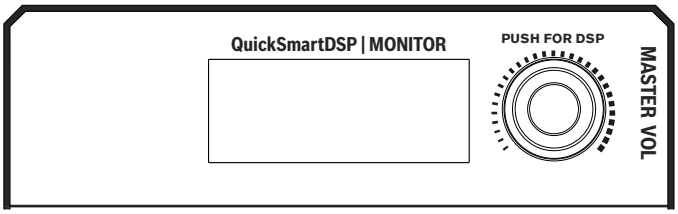

Accessing the DSP control menu

To access the DSP controls menu, do the following:

1. Push the MASTER VOL knob.
   The DSP Control menu appears.
2. Using the MASTER VOL knob, scroll through the menu items.
3. Push the MASTER VOL knob to select the menu item you want to modify.
   The focus moves to the parameters on the right side of the DSP menu.
4. Using the MASTER VOL knob, scroll through the parameters.
5. Push the MASTER VOL knob to confirm the selected parameter.
   The setting is saved. The focus returns to the menu items on the left side of the DSP menu.
6. Repeat steps 2 through 5 to modify additional DSP and system settings.
7. Select EXIT to return to the home screen.

5.3.1 Full-Range loudspeaker DSP control menu

The full-range loudspeaker DSP control menu selections are available for the ELX200-10P, ELX200-12P, and ELX200-15P loudspeakers.

EXIT	
MODE	MUSIC (Default)
	LIVE
	SPEECH
	CLUB
LOCATION	TRIPOD (Default)
	MONITOR
	WALL
	SUSPEND
SUB	OFF (Default)
	80Hz
	100Hz
	120Hz
	150Hz
	ELX200-12SP

		ELX200-18SP
		ZXA1-SUB
		EKX-15SP
		EKX-18SP
		ELX118P
TREBLE		0 db (Default)
		-12 dB to +6 dB
MID		0 db (Default)
		-12 dB to +6 dB
BASS		0 db (Default)
		-12 dB to +6 dB
LED		ON (Default)
		OFF
		LIMIT
DISPLAY	BACK	
	LCD DIM	ON (Default)
		OFF
	BRIGHT	5 (Default)
		1 - 10
	CONTRAST	5 (Default)
		1 - 10
	BACK	
STORE		EXIT, 1, 2, 3, 4, 5, EXIT
RECALL		EXIT, 1, 2, 3, 4, 5, EXIT
LOCK		NO (Default)
		YES
CONTROL APP		ON
		OFF (Default)
RESET		RESET ARE YOU SURE?
		NO (Default)
		YES
INFO		[PRODUCT NAME]
		[FIRMWARE VERSION]
		©2017 Electro-Voice

EXIT

Tab. 5.1: Full-Range Loudspeaker DSP Control Menu

EXIT Menu

The **Exit** menu is used to return to the home screen.

Notice!

The display returns to the home screen after two minutes of inactivity.

MODE Menu

The **Mode** menu is used to configure the type of sound the loudspeaker delivers.

Available options for this selection are: MUSIC, LIVE, SPEECH and CLUB.

- **MUSIC** – is used for recorded music playback and electronic dance music applications. (Default)
- **LIVE** – is used for live sound applications.
- **SPEECH** – is used for spoken word applications.
- **CLUB** – is used for recorded electronic music playback.

The default is MUSIC.

LOCATION Menu

The **Location** menu is used to optimize the loudspeaker for different boundaries.

Available options for this selection are: TRIPOD, MONITOR, WALL, and SUSPEND.

- **TRIPOD** – is used when the loudspeaker is placed on a tripod stand or placed on a pole. (Default)
- **MONITOR** – is used when the loudspeaker is placed on the angled monitor panel in monitor position. This setting compensates for the amount of low frequency boost created by placing the speaker close to the floor.
- **WALL** – is used when the loudspeaker is mounted to the wall using the mounting bracket (Mounting Bracket accessory sold separately). This setting compensates for the amount of low frequency boost created by placing the loudspeaker close to the wall. If used on a column, it is recommended to use the SUSPEND mode.
- **SUSPEND** – is used when the loudspeaker is suspended in a 3-point suspension by eyebolts.

The default is TRIPOD.

SUB Menu

The **Sub** menu is used to select a high pass frequency for use with a subwoofer or a matched subwoofer.

Available options for this selection are: OFF, 80Hz, 100Hz, 120Hz, 150Hz, ELX200-12SP, ELX200-18SP, ZXA1-SUB, EKX-15SP, EKX-18SP, and ELX118P. The high passes are 24 dB/octave Linkwitz/Riley crossovers. The 80 Hz, 100 Hz, 120 Hz, and 150 Hz choices are generic high pass settings for use with other subwoofers. The ELX200-12SP, ELX200-18SP, ZXA1-SUB, EKX-15SP, EKX-18SP, and ELX118P settings are specifically optimized for subwoofers by including delay for best summation.

The default is OFF.

TREBLE Menu

The **Treble** menu is used to adjust the high frequency performance of the loudspeaker for different applications or personal preference. The parameter controls a high shelving filter that is centered on 6 kHz.
The default is zero.

MID Menu

The **MID** menu is used to adjust the midrange frequency performance of the loudspeaker for different applications or personal preference. The parameter controls a parametric EQ that is centered on 1.8 kHz.
The default is zero.

BASS Menu

The **Bass** menu is used to adjust the low frequency performance of the loudspeaker for different applications or personal preference. The parameter controls a parametric EQ filter that is centered on 60 Hz.
The default is zero.

LED Menu

The **LED** menu shows power on and indicates limit. Available options for this selection are: ON, OFF or LIMIT.

- **ON** – turns the LED on when the power to the loudspeaker is ON. (Default)
- **OFF** – turns the LED off.
- **LIMIT** – turns the LED off under normal operation. The LED brief blinking indicates the limiter is activating. Short-term blinking is not critical because the integrated limiter keeps distortion under control. Constant lighting of the LED indicates the sound is negatively affected. If the LED is constantly lit, check the rear LCD for more information. Reducing the output volume is strongly recommended.

LCD DIM Menu

The **LCD Dim** menu is used to dim the display when the display is idle for two minutes. Available options for this selection are: ON or OFF.
The default is ON.

BRIGHT Menu

The **Bright** menu is used to determine the brightness of the LCD.
The range is 1 to 10.
The default is five.

CONTRAST Menu

The **Contrast** menu is used to increase or decrease the visibility of the LCD screen.
The range is 1 to 10.
The default is five.

STORE Menu

The **Store** menu allows you create up to five customized user settings. Available options for this selection are: EXIT, 1, 2, 3, 4, and 5.

Notice!

The customized user setting name can contain a combination of alphanumeric characters including spaces. The alphanumeric character range is A to Z and 0-9.
The name field length is 12 characters.

Storing customized user settings

To store customized user settings, do the following:

1. From the DSP menu, scroll to STORE**.**
2. Push the MASTER VOL knob to select STORE.
   The store screen appears.
3. Push the MASTER VOL knob to select 1.
   The Enter name for 1 screen appears.
4. Use the MASTER VOL knob to scroll through the characters.
   The characters appear.
5. Push the MASTER VOL knob to select the desired character.
6. Turn the MASTER VOL knob to move to the next character entry.
   Continue selecting characters until the desired name is entered.
7. Use the MASTER VOL knob to scroll to SAVE.
8. Push the MASTER VOL knob to select SAVE.
9. Repeat steps 3 through 8 to store additional customized user settings.
10. Select EXIT to return to the home screen.

RECALL Menu

The **Recall** menu allows you retrieve up to five customized user settings. Available options for this selection are: EXIT, 1, 2, 3, 4, and 5.

Recalling customized user settings

To recall customized user settings, do the following:

1. From the DSP menu, scroll to RECALL**.**
2. Push the MASTER VOL knob to select RECALL.
   The recall screen appears.
3. Push the MASTER VOL knob to select 1.
   The selected item is loaded.
4. Select EXIT to return to the home screen.

LOCK Menu

The **Lock** menu is designed to prevent users from inadvertently changing settings. Available options for this selection are: NO or YES.
The default is NO.

Locking the DSP menu

To lock the DSP menu, do the following:

1. From the DSP menu, scroll to LOCK.
2. Select ON.

Notice!

If menu lock is ON, the user is allowed to adjust the MASTER VOL.

Unlocking the DSP menu

To unlock the DSP menu, do the following:

- Press and hold the MASTER VOL knob for three seconds.
  The DSP menu unlocks.

CONTROL APP Menu

The **Control App** menu is used to enable the Quick**Smart** Mobile wireless control and monitoring application. Available options for this selection are: ON or OFF.
The default is OFF.

Notice!
Bluetooth® is available in select countries.
Contact your nearest Electro-Voice dealer or Electro-Voice distributor for more information.

The Bluetooth® word mark and logos are registered trademarks owned by Bluetooth SIG, Inc. and any use of such marks by Bosch Security Systems, Inc. is under license. Other trademarks and trade names are those of their respective owners.

Turning Bluetooth® ON or OFF

To turn Bluetooth® ON or OFF, do the following:

1. From the DSP menu, scroll to CONTROL APP.
2. Select ON.
   OR
   Select OFF.

RESET Menu

The **Reset** menu is used to reset the loudspeaker to original factory settings. Available options for this selection are: NO or YES.
The default is NO.

Resetting the system

To reset the system to original factory settings, do the following:

1. From the DSP menu, select RESET.
   The reset "Are you sure?" message appears.
2. Select YES.
   The loudspeaker restarts and resets the system to the original factory settings.

Notice!
The reset menu item is used to revert the loudspeaker to the original factory default settings. All user settings will be deleted. The user customized settings in the STORE and RECALL menus return to <EMPTY>.

INFO Menu

The **Information** menu is used to display the product name and firmware version.

5.3.2 Subwoofer DSP control menu

The subwoofer DSP control menu selections are available for the ELX200-12SP and ELX200-18SP subwoofers.

EXIT	
MODE	MUSIC (Default)
	LIVE
	CLUB
LOW PASS	80Hz
	100Hz (Default)
	120Hz
	150Hz
	ELX200-10P

		ELX200-12P
		ELX200-15P
		ZXA1
		EKX-12P
		EKX-15P
		ELX112P
		ELX115P
		ZLX-12P
		ZLX-15P
LED		ON (Default)
		OFF
		LIMIT
DISPLAY	BACK	
	LCD DIM	ON (Default)
		OFF
	BRIGHT	5 (Default)
		1 to 10
	CONTRAST	5 (Default)
		1 to 10
	BACK	
STORE		EXIT, 1, 2, 3, 4, 5, EXIT
RECALL		EXIT, 1, 2, 3, 4, 5, EXIT
LOCK		NO (Default)
		YES
CONTROL APP		ON
		OFF (Default)
RESET		RESET ARE YOU SURE?
		NO (Default)
		YES
INFO		[PRODUCT NAME]
		[FIRMWARE VERSION]
		©2017 Electro-Voice
EXIT		

Tab. 5.2: Subwoofer DSP Control Menu

EXIT Menu

The **Exit** menu is used to return to the home screen.

Notice!

The display returns to the home screen after two minutes of inactivity.

MODE Menu

The **Mode menu** is used to configure the type of sound the subwoofer delivers.

- **MUSIC** – is used for recorded music playback and electronic dance music applications. (Default)
- **LIVE** – is used for live sound applications.
- **CLUB** – is used for recorded electronic music playback.

LOW PASS Menu

The **LOW PASS** menu is used to select low pass frequency for proper summation with a full-range loudspeaker.

The low passes are 24 dB/octave Linkwitz/Riley slopes. The 80 Hz, 100 Hz, 120 Hz, and 150 Hz selections are generic low pass settings for use with other full-range loudspeaker systems. The ELX200-10P, ELX200-12P, ELX200-15P, ZXA1, EKX-12P, EKX-15P, ELX112P, ELX115P, ZLX-12P , and ZLX-15P settings are specifically optimized for full-range loudspeakers for best summation.

The default is 100 Hz.

LED Menu

The **LED** menu shows power on and indicates limit. Available options for this selection are: ON, OFF or LIMIT.

- **ON** – turns the LED on when the power to the loudspeaker is ON. (Default)
- **OFF** – turns the LED off.
- **LIMIT** – turns the LED off under normal operation. The LED brief blinking indicates the limiter is activating. Short-term blinking is not critical because the integrated limiter keeps distortion under control. Constant lighting of the LED indicates the sound is negatively affected. If the LED is constantly lit, check the rear LCD for more information. Reducing the output volume is strongly recommended.

The default is ON.

LCD DIM Menu

The **LCD Dim** menu is used to dim the display when the display is idle for two minutes. Available options for this selection are: ON or OFF.

The default is ON.

BRIGHT Menu

The **Bright** menu is used to determine the brightness of the LCD.

The range is 1 to 10.

The default is five.

CONTRAST Menu

The **Contrast** menu is used to increase or decrease the visibility of the LCD screen.

The range is 1 to 10.

The default is five.

STORE Menu

The **Store** menu allows you create up to five customized user settings. Available options for this selection are: EXIT, 1, 2, 3, 4, and 5.

Notice!
The customized user setting name can contain a combination of alphanumeric characters including spaces. The alphanumeric character range is A to Z and 0-9.
The name field length is 12 characters.

Storing customized user settings

To store customized user settings, do the following:

1. From the DSP menu, scroll to STORE**.**
2. Push the MASTER VOL knob to select STORE.
   The store screen appears.
3. Push the MASTER VOL knob to select 1.
   The Enter name for 1 screen appears.
4. Use the MASTER VOL knob to scroll through the characters.
   The characters appear.
5. Push the MASTER VOL knob to select the desired character.
6. Turn the MASTER VOL knob to move to the next character entry.
   Continue selecting characters until the desired name is entered.
7. Use the MASTER VOL knob to scroll to SAVE.
8. Push the MASTER VOL knob to select SAVE.
9. Repeat steps 3 through 8 to store additional customized user settings.
10. Select EXIT to return to the home screen.

RECALL Menu

The **Recall** menu allows you retrieve up to five customized user settings. Available options for this selection are: EXIT, 1, 2, 3, 4, and 5.

Recalling customized user settings

To recall customized user settings, do the following:

1. From the DSP menu, scroll to RECALL**.**
2. Push the MASTER VOL knob to select RECALL.
   The recall screen appears.
3. Push the MASTER VOL knob to select 1.
   The selected item is loaded.
4. Select EXIT to return to the home screen.

LOCK Menu

The **Lock** menu is designed to prevent users from inadvertently changing settings. Available options for this selection are: NO or YES.
The default is NO.

Locking the DSP menu

To lock the DSP menu, do the following:

1. From the DSP menu, scroll to LOCK.
2. Select ON.

Notice!
If menu lock is ON, the user is allowed to adjust the MASTER VOL.

Unlocking the DSP menu

To unlock the DSP menu, do the following:

- Press and hold the MASTER VOL knob for three seconds.

The DSP menu unlocks.

CONTROL APP Menu

The **Control App** menu is used to enable the Quick**Smart** Mobile wireless control and monitoring application. Available options for this selection are: ON or OFF.
The default is OFF.

Notice!
Bluetooth® is available in select countries.
Contact your nearest Electro-Voice dealer or Electro-Voice distributor for more information.

The Bluetooth® word mark and logos are registered trademarks owned by Bluetooth SIG, Inc. and any use of such marks by Bosch Security Systems, Inc. is under license. Other trademarks and trade names are those of their respective owners.

Turning Bluetooth® ON or OFF

To turn Bluetooth® ON or OFF, do the following:

1. From the DSP menu, scroll to CONTROL APP.
2. Select ON.
   OR
   Select OFF.

RESET Menu

The **Reset** menu is used to reset the loudspeaker to original factory settings. Available options for this selection are: NO or YES.
The default is NO.

Resetting the system

To reset the system to original factory settings, do the following:

1. From the DSP menu, select RESET.
   The reset "Are you sure?" message appears.
2. Select YES.
   The loudspeaker restarts and resets the system to the original factory settings.

Notice!
The reset menu item is used to revert the loudspeaker to the original factory default settings. All user settings will be deleted. The user customized settings in the STORE and RECALL menus return to <EMPTY>.

INFO Menu

The **Information** menu is used to display the product name and firmware version.

6 Pairing the QuickSmart Mobile application

The EV Quick**Smart** Mobile app is available for download for the iOS 10 and higher tablets and smart phones from the iTunes App Store or Android Marshmallow and higher tablets and smart phones from the Google Play Store.

Notice!
The EV Quick**Smart** Mobile app is designed to only find speakers from Electro-Voice with Bluetooth® enabled.
The EV Quick**Smart** Mobile app will not display other types of Bluetooth® devices, e.g. phones, laptops, tablets, or headsets.

Notice!
Bluetooth® is available in select countries.
Contact your nearest Electro-Voice dealer or Electro-Voice distributor for more information.

Prior to pairing the EV Quick**Smart** Mobile app with loudspeakers by Electro-Voice ensure Bluetooth® is enabled on the smart phone or tablet, and the loudspeaker.

First time pairing:
To pair the loudspeaker with the EV QuickSmart Mobile app, do the following:

1. Open the EV Quick**Smart** Mobile app.
2. Finding nearby speakers is displayed on the screen
   The EV Quick**Smart** Mobile app is looking for available Bluetooth® enabled Electro-Voice loudspeakers.
3. The available loudspeakers are displayed on the screen.
   The app will display up to eight available loudspeakers.
4. Tap the loudspeaker you want to pair with the app.
   The selected loudspeaker will have a red line under it acknowledging it is selected.
5. Repeat the previous step until all of the desired loudspeakers are selected.
6. Tap the red CONNECT button.
7. The app pairs with the desired loudspeaker.
   The app can connect to up to six loudspeakers.

Subsequent pairing:
To pair the loudspeaker with the EV QuickSmart Mobile app, do the following:

1. Tap the EV QuickSmart Mobile app icon.
2. Finding nearby speakers is displayed on the screen
   The EV Quick**Smart** Mobile app is looking for available Bluetooth® enabled Electro-Voice loudspeakers.
3. The available loudspeakers are displayed on the screen.
   The app will display up to eight available loudspeakers.
4. Tap the loudspeaker you want to pair with the app.
   The selected loudspeaker will have a red line under it acknowledging it is selected.
5. Repeat the previous step until all of the desired loudspeakers are selected.
6. Tap the red CONNECT button.
7. The app pairs with the desired loudspeaker.
   The app can connect to up to six loudspeakers.

7 Recommended configurations

7.1 Daisy-chaining full-range systems

LINE and MIC input level control is available for both INPUT 1 and INPUT 2. The 12 o'clock position is unity gain (no gain or attenuation) and the range to the right of zero is for adjusting microphone levels.

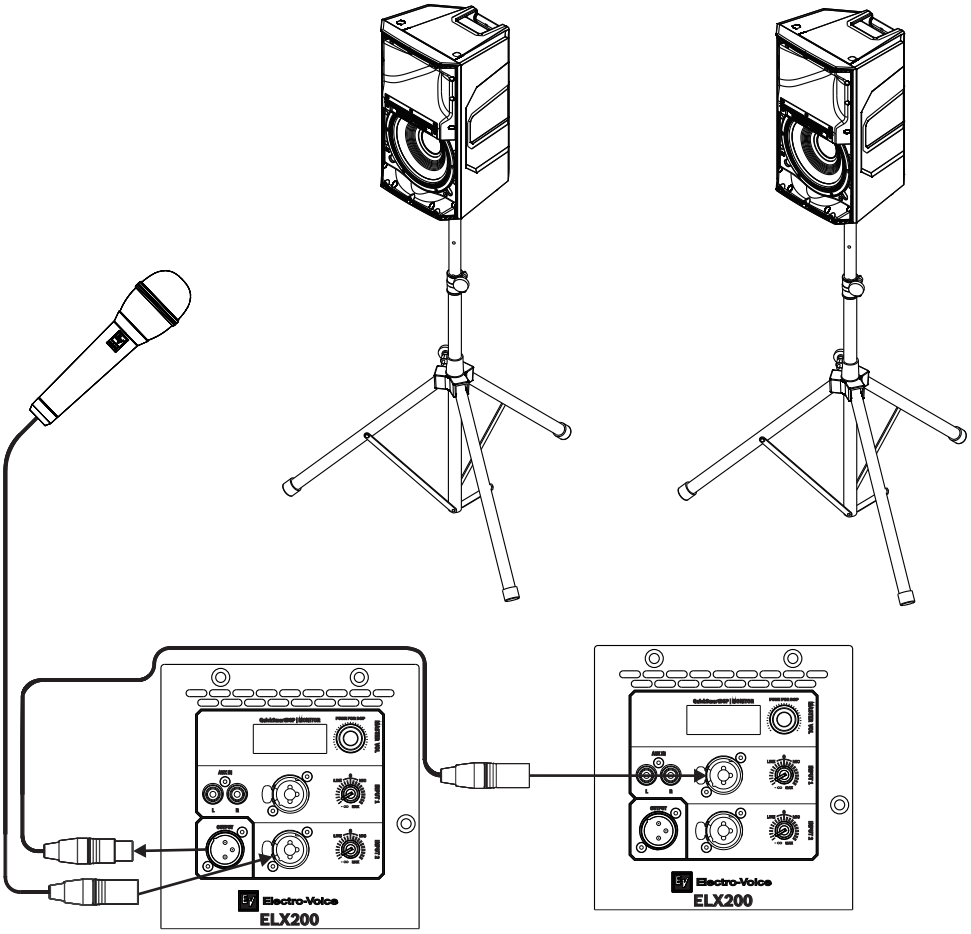

Notice!
The direction of the arrow indicates the signal path.

Mode:	Speech
Location:	Tripod
Sub:	Off

Tab. 7.3: DSP settings loudspeaker on a tripod

Refer to

- *Amplifier DSP controls, page 19*
- *Full-Range loudspeaker DSP control menu, page 22*

7.2 MP3 player MONO configuration

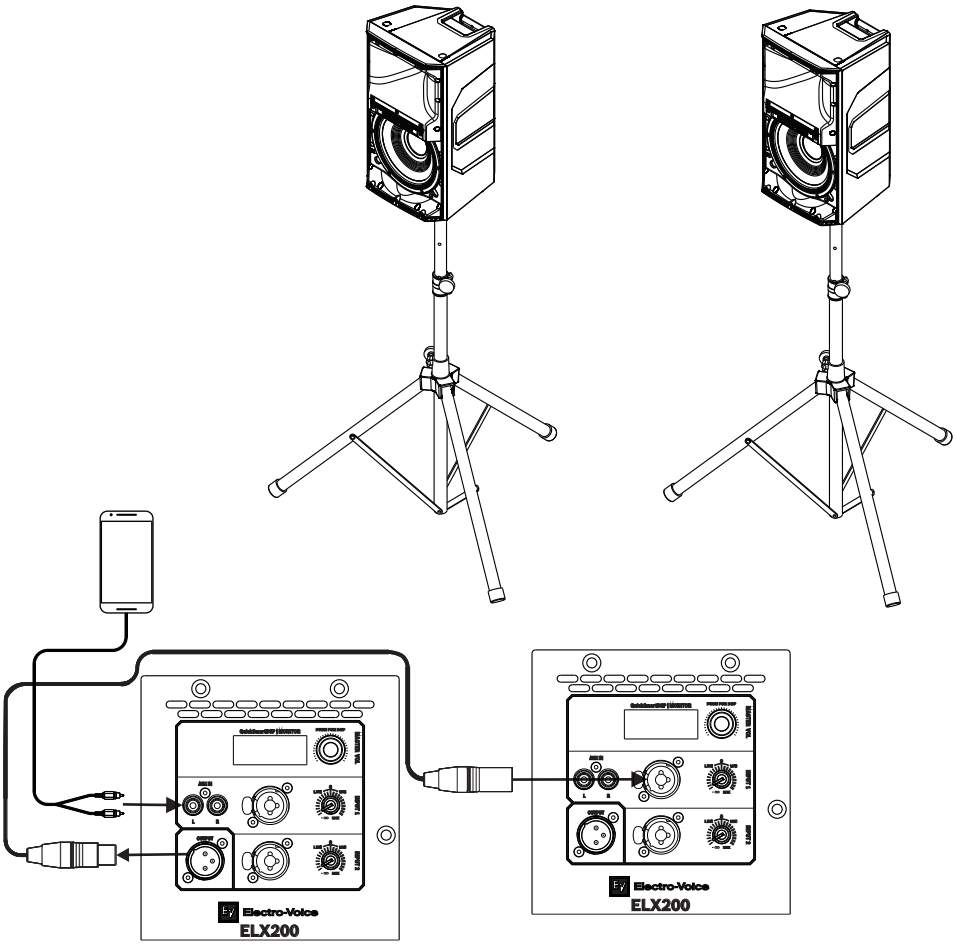

Notice!
The direction of the arrow indicates the signal path.

Mode:	Music
Location:	Tripod
Sub:	Off

Tab. 7.4: DSP settings loudspeaker on a tripod

Refer to

– *Full-Range loudspeaker DSP control menu, page 22*

7.3 MP3 player STEREO configuration

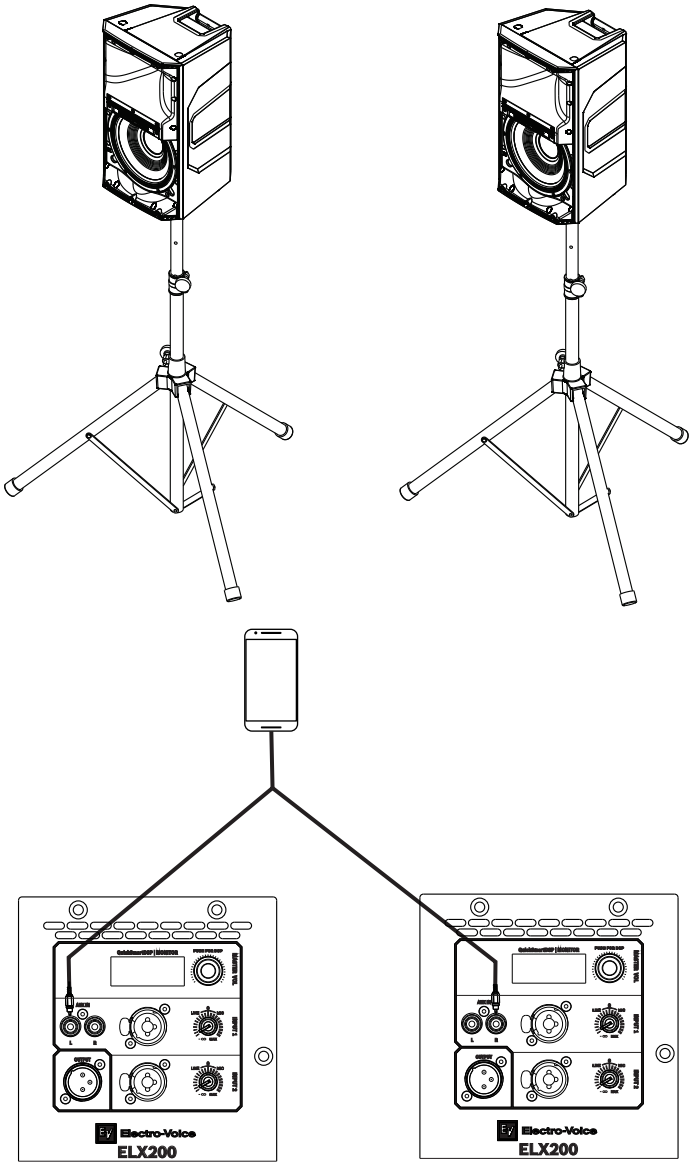

Mode:	Music
Location:	Tripod
Sub:	Off

Tab. 7.5: DSP settings loudspeaker on a tripod

Refer to

– *Full-Range loudspeaker DSP control menu, page 22*

7.4 Using full-range systems as monitors

LINE and MIC input level control is available for both INPUT 1 and INPUT 2. The 12 o'clock position is unity gain (no gain or attenuation) and the range to the right of zero is for adjusting microphone levels.

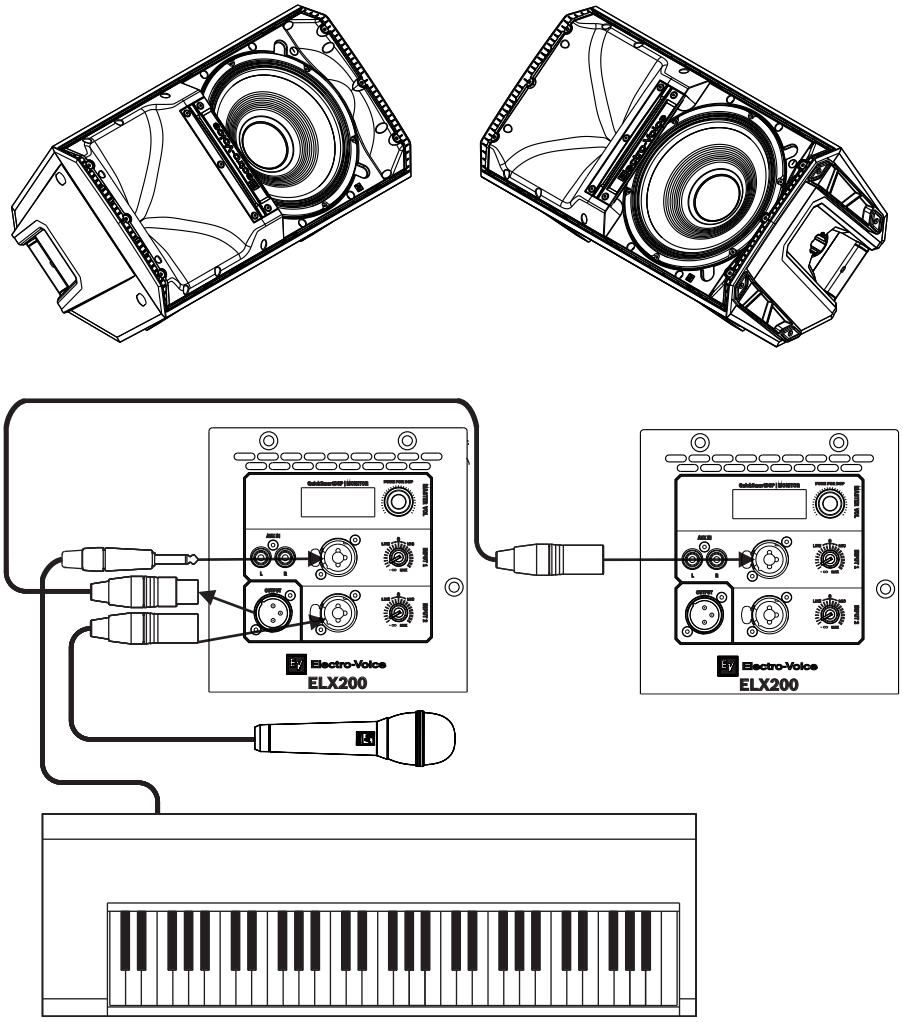

Notice!
The direction of the arrow indicates the signal path.

Mode:	Live
Location:	Monitor
Sub:	Off

Tab. 7.6: DSP settings loudspeakers as monitors

Refer to

- *Amplifier DSP controls, page 19*
- *Full-Range loudspeaker DSP control menu, page 22*

7.5 Stacking full-range systems with subwoofers

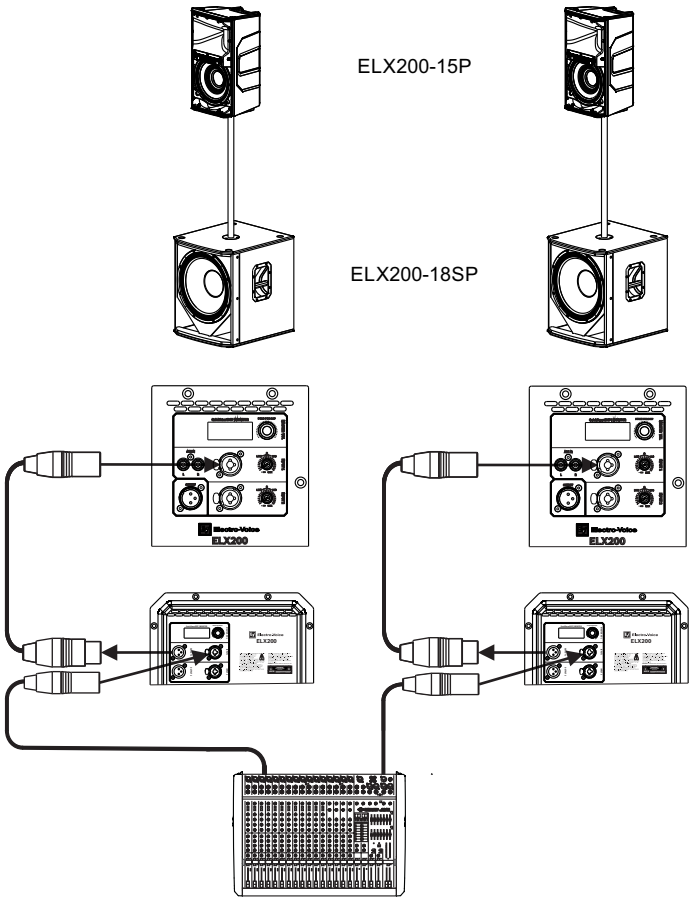

Notice!
The direction of the arrow indicates the signal path.

ELX200-15P	
Mode:	Live
Location:	Tripod
Sub:	ELX200-18SP
ELX200-18SP	
Mode:	Live
Location:	Normal
Low Pass:	ELX200-15P

Tab. 7.7: DSP settings loudspeaker and subwoofer stacked

Refer to

- *Full-Range loudspeaker DSP control menu, page 22*
- *Subwoofer DSP control menu, page 27*

8 Troubleshooting

Problem	Possible Cause(s)	Action
1. No sound	Amplifier	Verify all the electronics are on, the signal routing is correct, the source is active; the volume is turned up, etc. Correct/repair/replace as necessary. If there is still no sound, then the problem may be wiring.
	Wiring	Verify you have connected the correct cables to the amplifier. Play something at a low level through the amplifier. Connect a test loudspeaker in parallel with the malfunctioning line. If the sound level is gone or is very weak, the line has a short in it (possibly a severe scrape, pinch, or a missed connection). Using the test loudspeaker, move down the line and test each connection/junction until you find the problem and correct it. Observe proper polarity.
2. Poor Low-Frequency Response	With SUB menu cross-over frequency activated	If no subwoofers are used with the system, select the OFF position.
3. Intermittent output such as cracking or distortion	Faulty connection	Check all connections at amplifier and loudspeakers to ensure they are all clean and tight. If the problem persists, check the wiring. See problem 1.
4. Constant noise such as buzzing, hissing or humming	Defective source or other electronic device	If noise is present, but no program material is playing, evaluate each component as necessary to isolate the problem. Most likely there is a break in the signal path.
	Poor system grounding or ground loop	Check and correct the system grounding, as required.
	Input gain knob is not in the MIC position	Slowly increase the input gain knob level to engage the microphone pre-amp.
5. No sound produced with microphone connected to INPUT 1 or INPUT 2	Microphone requires phantom power.	Use a dynamic microphone that does not require phantom power. If using a microphone requiring phantom power, an external phantom power source is needed.
	Input gain knob is not in the MIC position	Slowly increase the input gain knob level to engage the microphone pre-amp.
6. Sound is distorted front LED is OFF, LCD screen LIMIT is ON	Excessive input level	Reduce the input level or loudspeaker level knobs to prevent limit.

Problem	Possible Cause(s)	Action
	Incorrect gain structure or source input (mixing console/preamp) is overdriven	Verify level controls of the source are properly structured by using the VU meter indicator on the LCD screen. If the VU meter bar is solid or the system indicates LIMIT, the input or source level is too high.
7. Microphone produces acoustic feedback when input level is amplified	Incorrect gain structure	Reduce the microphone levels at the mixing console or input source. If the microphone is connected directly to the speaker, reduce the input level on the speaker. Positioning the microphone close to the sound source increases gain-before-feedback. See problem 6.
	MODE is set to MUSIC	Change the MODE to LIVE or SPEECH.
	Microphone position is too close to the front of the loudspeaker	Whenever possible setup the loudspeakers so the microphone is behind them. If using the loudspeaker in a monitor position, aim the loudspeaker to the back of the microphone.
8. DSP menu is locked	The Menu Lock function has been turned on. A lock symbol displays on the LCD screen.	Press and hold the MASTER VOL knob for 5 seconds.
9. Quick**Smart** Mobile app does not detect the loudspeaker	Enable Bluetooth®	Ensure Bluetooth® is enabled on the loudspeaker.

If these suggestions do not solve your problem, contact your nearest Electro-Voice dealer or Electro-Voice distributor.

Refer to

– *System status, page 21*
– *DSP controls, page 22*

9 Technical data

ELX200-10P, ELX200-12P, and ELX200-15P .

	ELX200-10P	ELX200-12P	ELX200-15P
Freq. response (-3 dB):	59 Hz - 18 kHz[1]	57 Hz - 16 kHz[1]	55 Hz - 16 kHz[1]
Freq. range (-10 dB):	53 Hz - 20 kHz[1]	51 Hz - 20 kHz[1]	48 Hz - 19 kHz[1]
Maximum SPL:	130 dB[2]	130 dB[2]	132 dB[2]
Coverage (H x V):	90° x 60°		
Power rating:	1200 W		
LF transducer:	EVS-10M 254 mm (10 in)	EVS-12M 300 mm (12 in)	EVS-15M 381 mm (15 in)
HF transducer:	DH-1L 1-inch titanium compression driver		
Crossover freq.:	1800 Hz	1700 Hz	1600 Hz
Connectors:	(1) Stereo RCA Input, (2) XLR/TRS combo jack, and (1) XLR		
Enclosure:	Polypropylene		
Grille:	18 AWG steel with powdercoat		
Suspension:	(3) M10 suspension points		
Color:	Black or white		
Dimensions (H x W x D): mm, (in)	531 x 330 x 319 (21.0 x 13.0 x 12.6)	629 x 363 x 344 (24.8 x 14.3 x 13.6)	710 x 423 x 384 (28.0 x 16.7 x 15.2)
Net weight:	13.5 kg (29.9 lb)	15.6 kg (34.4 lb)	18.9 kg (41.7 lb)
Shipping weight:	15.6 kg (34.4 lb)	17.7 kg (39.1 lb)	21.8 kg 48.1 lb)
Power consumption:	100 - 240 V~, 50 - 60 Hz, 1.2 - 0.6A[3]		

[1]Full-space measurement using music DSP preset.
[2]Maximum SPL is measured at 1 m using broadband pink noise at maximum output.
[3]Current rating is 1/8 power.

ELX200-12SP and ELX200-18SP

	ELX200-12SP	ELX200-18SP
Freq. Response (-3 dB):	49 Hz - 135 Hz[1]	47 Hz - 105 Hz[1]
Freq. Range (-10 dB):	41 Hz - 165 Hz[1]	40 Hz - 145 Hz[1]
Maximum SPL:	129 dB[2]	132 dB[2]
Power Rating:	1200 W	
LF Transducer:	EVS-12L 300 mm (12 in)	EVS-18L 457 mm (18 in)
Low Pass Frequency:	Adjustable: 80 Hz, 100 Hz, 120 Hz, 150 Hz	
Connectors:	(2) XLR/TRS combo jacks and (2) XLR link outputs	
Enclosure:	15 mm plywood with durable polyurea top-coat finish	
Grille:	18 AWG steel with powdercoat	

	ELX200-12SP	ELX200-18SP
Color:	Black or white	
Dimensions (H x W x D): mm, (in)	397 x 445 x 457 (16.7 x 17.6 x 18.0)	600 x 507 x 574 (23.7 x 20.0 x 22.6)
Net Weight:	19.1 kg (42.2 lb)	29.0 kg (64 lb)
Shipping Weight:	22.3 kg (49.2 lb)	33.1 kg (73.0 lb)
Power Consumption:	100 - 240 V~, 50 - 60 Hz, 1.2 - 0.6A[3]	

[1]Half-space measurement.
[2]Maximum SPL is measured at 1 m using broadband pink noise at maximum output.
[3]Current rating is 1/8 power.

9.1 Dimensions

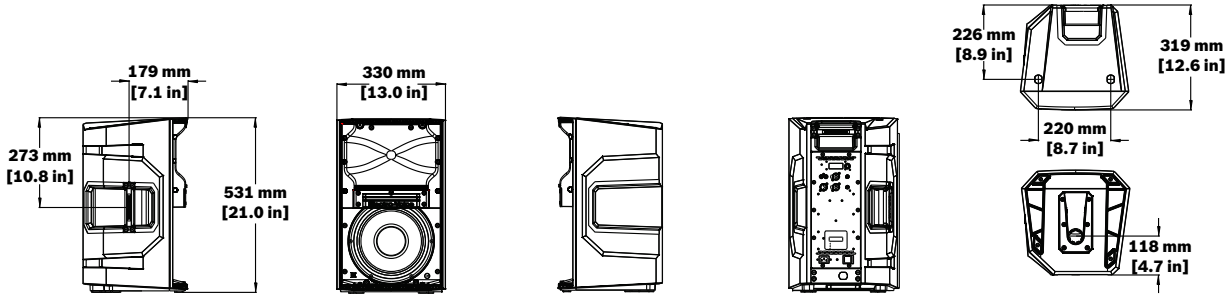

Figure 9.1: ELX200-10P dimensions

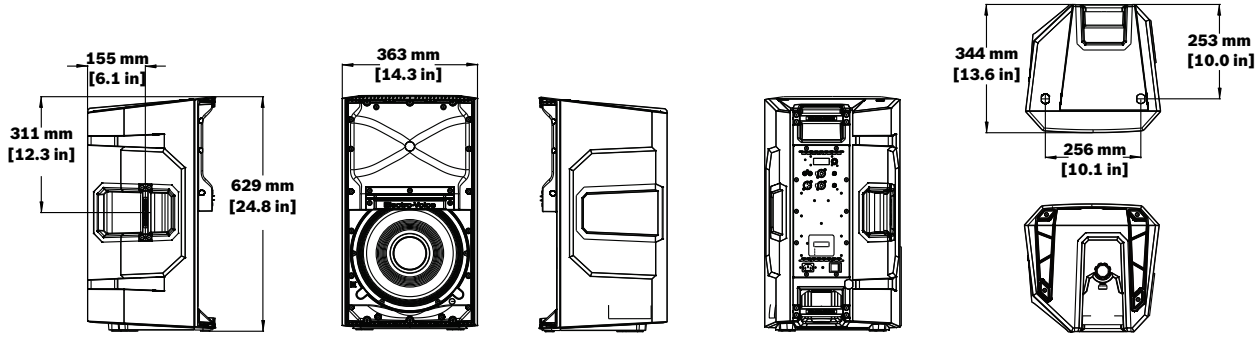

Figure 9.2: ELX200-12P dimensions

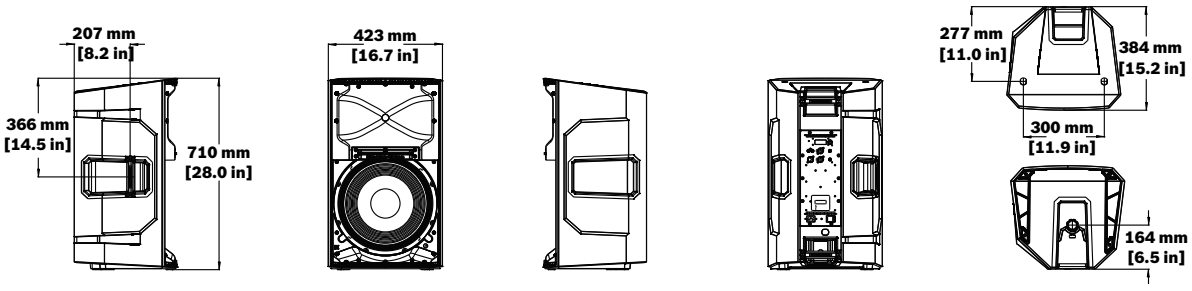

Figure 9.3: ELX200-15P dimensions

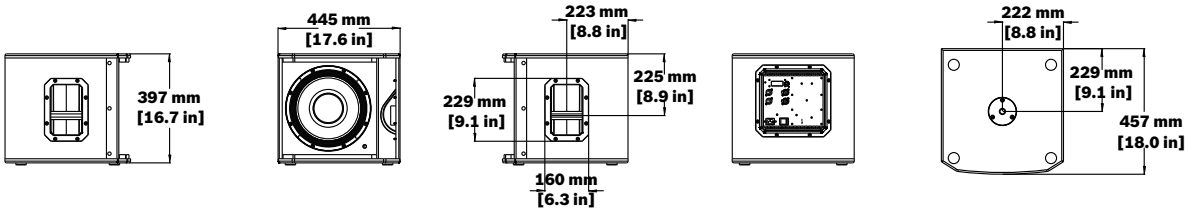

Figure 9.4: ELX200-12SP dimensions

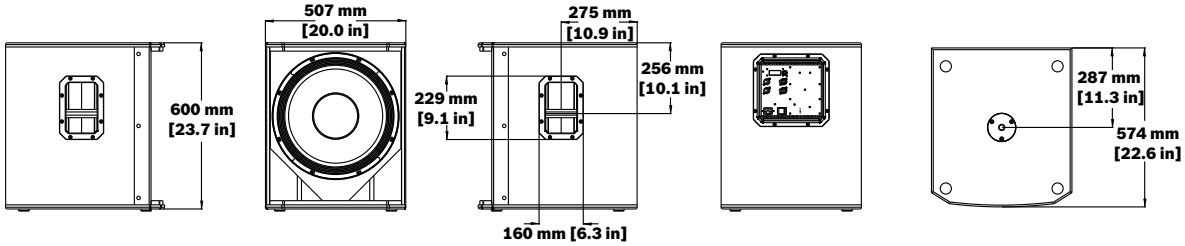

Figure 9.5: ELX200-18SP dimensions

9.2 Frequency response

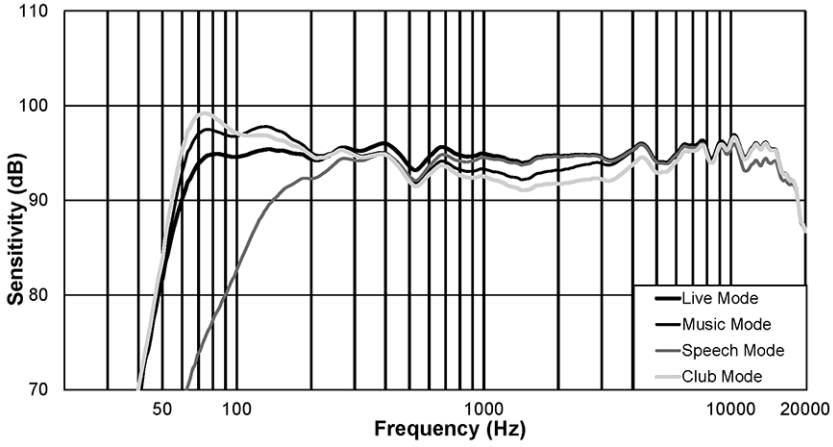

Figure 9.6: ELX200-10P frequency response: Live, Music, Speech, and Club modes

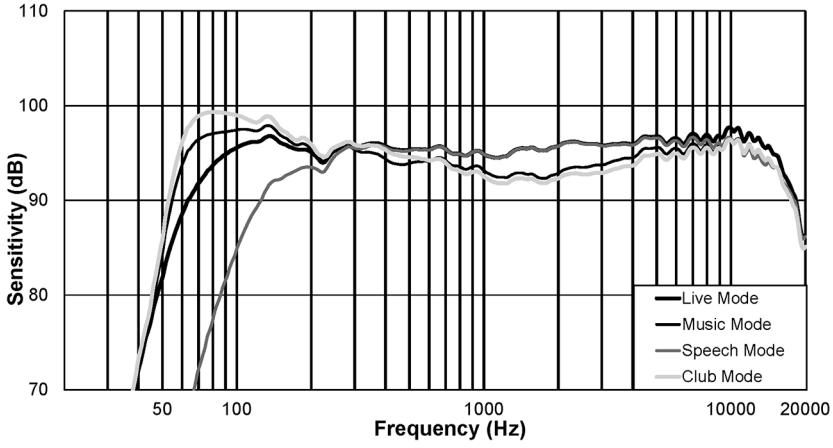

Figure 9.7: ELX200-12P frequency response: Live, Music, Speech, and Club modes

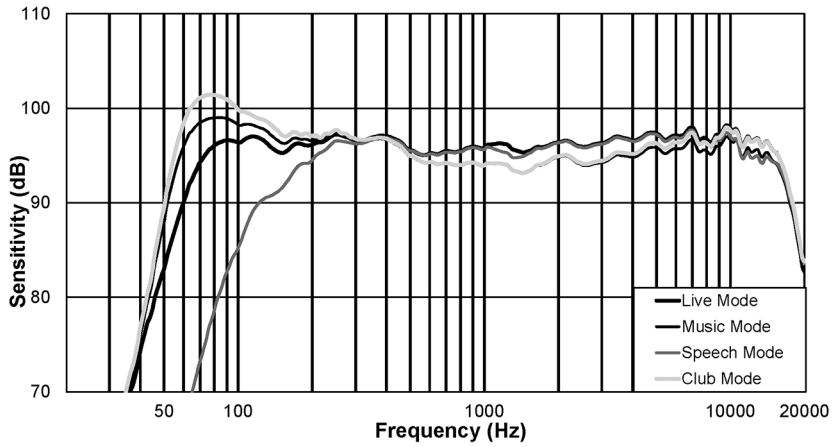

Figure 9.8: ELX200-15P frequency response: Live, Music, Speech, and Club modes

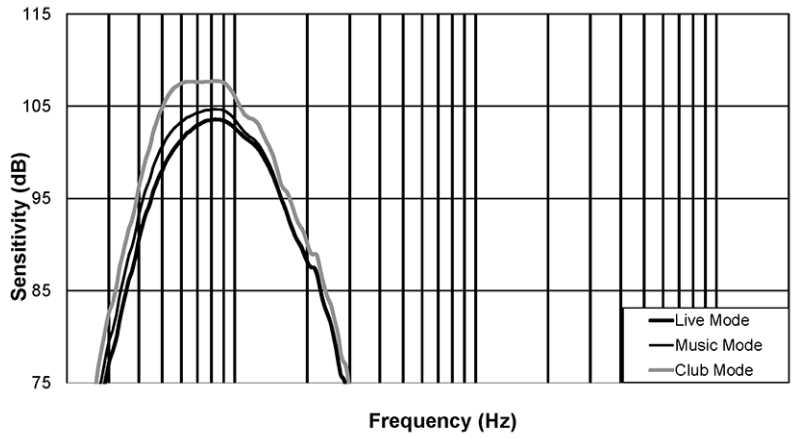

Figure 9.9: ELX200-12SP frequency response: Live, Music, Speech, and Club modes

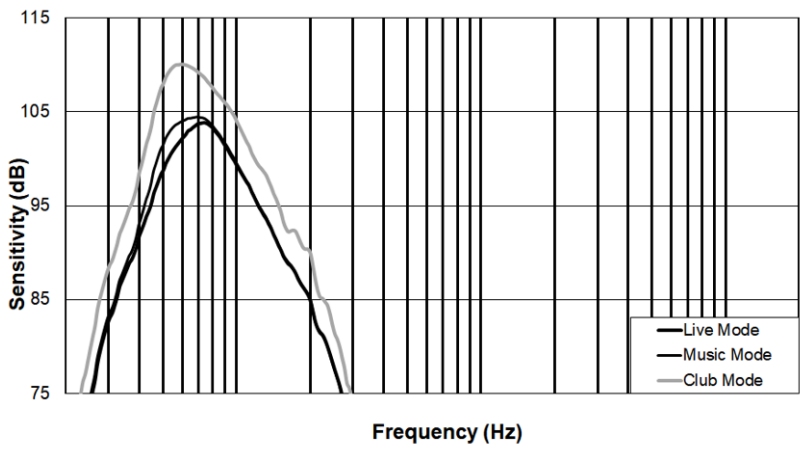

Figure 9.10: ELX200-18SP frequency responses: Live, Music, Speech, and Club modes

Bosch Sicherheitssysteme GmbH
Robert-Bosch-Ring 5
85630 Grasbrunn
Germany
www.boschsecurity.com
© Bosch Sicherheitssysteme GmbH, 2021

Bosch Security Systems, LLC
12000 Portland Avenue South
Burnsville MN 55337
USA
www.electrovoice.com
© Bosch Security Systems, LLC, 2021

202107271137