L-ACOUSTICS CABLES

FEATURE OVERVIEW

December 2025

INTRODUCTION

L-Acoustics cable solutions offer dependable and simple interconnects for all aspects of an audio system. The cables facilitate the interfacing and distribution of Milan-AVB, AES/EBU, and analog audio formats and connections from the amplified controllers to the loudspeakers. A range of adaptors further enhance the usability and flexibility of the cables, enabling them to be utilized in a wide variety of applications that complement our systems approach.

For all cables and adaptors premium quality components are selected and tested to provide the longevity, reliability, and ruggedness expected in professional audio environments. These high-quality cable solutions deliver the same level of performance as our electronics and loudspeaker products making them the perfect complement for any L-Acoustics deployment.

This feature overview consolidates the essential information and specifications for every cable and adaptor currently produced. As a reference document, it presents part numbers and descriptions for all available lengths and options, including dimensions, weights, and connector pinout charts with diagrams. It is divided into two categories: the first section covers signal distribution via network, AES/EBU, and analog connections and the second section relates to loudspeaker cables and adaptors.

CONTENTS

SIGNAL DISTRIBUTION

DOE CABLES 2

DB CABLES 4

DOM CABLES 6

LOUDSPEAKERS

SP CABLES 8

DO CABLES 10

SC32 CABLES 12

DOE CABLES

L-Acoustics DOE cable solutions offer dependable and simple interconnects for systems using LA-RAK III, LA-RAK II AVB, or anywhere a redundant Milan-AVB network architecture is implemented. DOE cables are available in three lengths to enable interconnection between Front of House and stage, cross stage, between racks, or to connect any other network devices. Seamless Milan-AVB redundancy is supported with dual CAT6A cables housed in a single ruggedized and flexible protective jacket. Each CAT6A cable is terminated with a Neutrik etherCON™ connector.

Color coding

A simple color-coding system has been used to enable error free deployment and simple fault finding. The black jacket indicates the primary Milan-AVB connection and red indicates the secondary. No need to read numbers, letters or coded messages written on pieces of tape. A clear thermo-retractable sheath is also included to accommodate a custom label for the cable, together with a reusable cable strap.

Cable types

There are three DOE cables available with different overall and breakout lengths designed for various applications:

- **DOE2:** 1.3 m (4.25 ft) + 2 x 0.35 m (1.25 ft) break-out
- **DOE45:** 43 m (141 ft) + 2 x 1m (3.3 ft) break-out
- **DOE100:** 98 m (321.4 ft) + 2 x 1m (3.3 ft) break-out

Cable	Description	Length	Application
DOE2	Dual AVB Network cable CAT6A, etherCON™	2 m (6.5 ft)	Inter-rack links and P1 to LS10 links at FOH
DOE45	Dual AVB Network cable CAT6A, etherCON™	45 m (147.6 ft)	Cross-stage links
DOE100	Dual AVB Network cable CAT6A, etherCON™	100 m (328 ft)	FOH to Stage links

Cable specifications

Cable	Conductors	Weight	Overall Diameter	Minimum bend radius		Operating Temp.		Compliance	
Type	Number x diameter	without connectors	Outer jacket	Main cable	Breakout section	Occasional flexing	Fixed installation	IEC 61156-5	IEC 61156-6
DOE	16 x 0.57 mm (AWG23/7)	N/A	25.2 mm (1.0 in)	160 mm (6.30 in)	50 mm (1.97 in)	-25°C to +75°C (-13°F to 167°F)	-25°C to +75°C (-13°F to 167°F)	Yes	Yes

Electrical specifications

Attenuation at 100 MHz in dB/100 m	< 27 dB
Return loss at 100 MHz in dB/100 m	> 20 dB

L-Acoustics_cables_overview/12-25 © L-Acoustics, all rights reserved. Information subject to change without prior notice.

DOE CABLES (CONT)

Advantages

DOE cables bring many advantages when deploying L-Acoustics systems. They can be used to connect an entire system, incorporating P1, LA-RAK III and LA-RAK II AVB, or any devices that utilize the Milan-AVB protocol. The use of Milan-AVB realizes a time sensitive network architecture, adding seamless redundancy and dependability. In addition, the DOE cable solution simplifies and accelerates system setup, minimizing cabling errors and time-consuming fault-finding processes.

Using DOE cables

- Removes risks of incorrect patching, as all audio channels and control use a single connector
- The simple and consistent color coding drastically reduces the chance of errors when wiring a system
- Only two connections are required between devices, increasing speed of setup, compared with multiple XLR's for AES/EBU or analog schemes
- Ensures dramatic savings in transport, weight and storage space compared with equivalent AES/EBU or analog architecture
- Ensures longevity in touring applications thanks to the ruggedized and reinforced materials used
- Offers resilience to frequent winding/unwinding due to a highly flexible cable

Using Milan-AVB

- Guarantees on-time delivery of time-sensitive data, unlike other network audio protocols
- Provides seamless network redundancy
- Assures plug-and-play interoperability of any Milan-certified device
- Network setup is made fast and simple thanks to the auto-discovery of devices
- Grants the ability to control routing remotely, which means the need to physically go to racks to diagnose and correct patching errors is removed

Deployment example

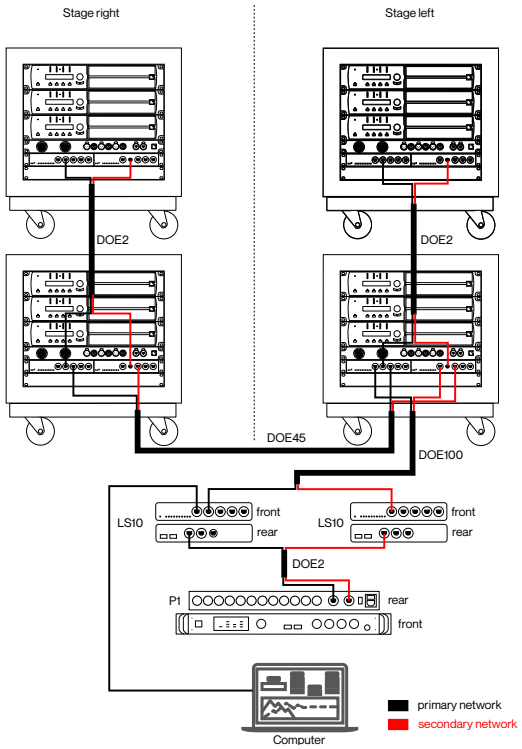

L-Acoustics_cables_overview/12-25 © L-Acoustics, all rights reserved. Information subject to change without prior notice.

DB CABLES

L-Acoustics DB cables offer dependable and efficient interconnects from the female DB25 multipins of LC16D to an XLR break-in or out. Carrying up to eight AES/EBU pairs or 16 audio channels each they are available in input and output formats. Made using high quality, professional-grade, 110 ohms AES/EBU multicore cable, they are engineered to deliver reliable connection between LC16D and other AES/EBU enabled products, such as P1, LA Series amplified controllers, or digital mixing consoles and stage boxes.

The male DB25 connectors are wired according to the AES59 annex C 8-way pinout standard. They are a tough and hard-wearing metal type, with locking screws, that offer a high number of mating cycles and gold-plated pins. Each XLR connector on the break-in/out end has an identifying ring, which is color-coded and numbered 1-8. DB cables also include an adjustable and reusable strap and a clear thermo-retractable sheath to accommodate a custom label for the cable.

Cable Types

Both DB input and output cable variants have the same overall length:

- **DBXX:** 1.5 m (4.9 ft) + 8 x 0.50 m (1.6 ft) break-in/out

Cable	Description	Length	Application
DBF2	1 x DB25, male type to 8 x Female XLR	2 m (6.5 ft)	LC16D AES/EBU inputs
DBM2	1 x DB25, male type to 8 x Male XLR	2 m (6.5 ft)	LC16D AES/EBU outputs

Cable specifications

Cable	Conductors	Weight	Overall Diameter	Minimum bend radius		Operating Temp.		Compliance	
Type	Number x diameter	without connectors	Outer jacket	Occasional flexing	Fixed installation	Occasional flexing	Fixed installation	VDE 0472 part 804 class B	IEC 60332-1
DB	24 x 0.14 mm² (AWG26)	0.178 kg/m (0.119 lb/ft)	12.5 mm (0.41 in)	125 mm (4.92 in)	62 mm (2.44 in)	-15°C to + 60°C (5°F to 140°F)	-25°C to + 80°C (-13°F to 176°F)	Yes	Yes

Electrical specifications

Attenuation at 6 MHz in dB/100 m	8.0 dB +/- 5%
Characteristic impedance (6 MHz @ 20°C)	110 ohms +/- 20%

L-Acoustics_cables_overview/12-25 © L-Acoustics, all rights reserved. Information subject to change without prior notice.

DB CABLES (CONT)

Color coding / numbering

The individual XLR cables have identifying rings that are numbered 1-8 and color-coded (**Col**). The cables within the DM multicore are numbered 1-8, with 3 conductors (**Con**) for the positive (**+**), negative (**-**), and ground/shield (**Gr**) connections, and are allocated to the pins as follows

Pin	Con	Col	Pin	Con	Col
1	15/16 +	8	14	15/16 -	8
2	15/16 Gr	8	15	13/14 +	7
3	13/14 -	7	16	13/14 Gr	7
4	11/12 +	6	17	11/12 -	6
5	11/12 Gr	6	18	9/10 +	5
6	9/10 -	5	19	9/10 Gr	5
7	7/8 +	4	20	7/8 -	4
8	7/8 Gr	4	21	5/6 +	3
9	5/6 -	3	22	5/6 Gr	3
10	3/4 +	2	23	3/4 -	2
11	3/4 Gr	2	24	1/2 +	1
12	1/2 -	1	25	1/2 Gr	1
13	NC				

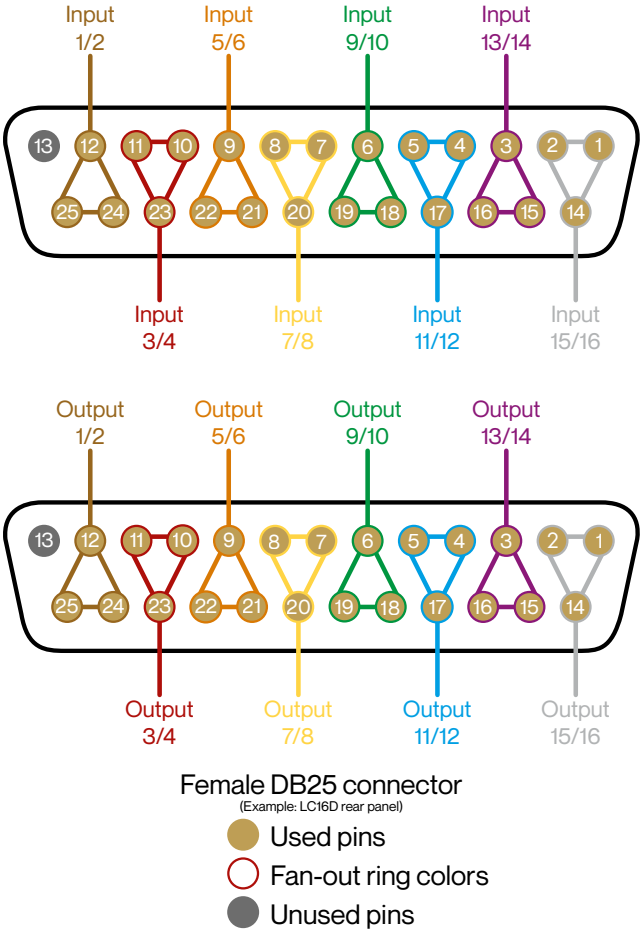

Advantages

DBF2 and DBM2 use the highest quality cable and connectors and are engineered to transport AES/EBU digital audio signals, delivering reliable connections between LC16D and other AES/EBU enabled devices, even at higher sampling rates. The convenient two meter length and 50 cm break-in/out makes them practical and flexible and enable the DB25 multipin connector to be patched to multiple devices simply and efficiently.

Using DB cables

- Professional grade AES/EBU cable with 110 ohms impedance characteristics
- High quality metal connectors deliver reliability and peace of mind
- Connect up to eight pairs of AES/EBU (16 channels total) to LC16D
- Practical XLR3 break-in/out length of 50 cm makes connections to or from multiple devices simple

L-Acoustics_cables_overview/12-25 © L-Acoustics, all rights reserved. Information subject to change without prior notice.

DOM CABLES

L-Acoustics DOM cables are a tough and rugged connection option for LA-RAK II AVB, or any rack that includes an LA-PANEL II. DOM cables distribute analog audio signals between racks and a combination of accessories enables connections with XLR-based devices, such as P1 or a mixing console, with both input and output options available.

DOM cables utilize a 19-pin CA-COM connector, of which 18 pins are used to transport 6 channels of balanced analog audio.

Cable types

DOM cables are available in various pre-made lengths and include several accessories:

- **DOMxx**: Are terminated with female 19-pin CA-COM connectors, with locking rings at each end of the cable and are designed to be used with LA-PANELs and LA-RAK hardware.
- **DOM#:** Three accessories create added flexibility, with the ability to connect to XLR based hardware and link or extend DOMxx cables.

Cable	Description	Length	Application
DOM2	2 x 19-pin CA-COM female type connectors with locking rings	2.0 m (6.5 ft)	Inter-rack link cable
DOM30	2 x 19-pin CA-COM female type connectors with locking rings	30 m (100 ft)	Cross stage link cable
DOM45	2 x 19-pin CA-COM female type connectors with locking rings	45 m (150 ft)	FOH to stage/cross stage link cable
DOMF	1 x 19-pin CA-COM female type connector with locking ring to 6 x Female XLR	1.5 m (5.0 ft)	Break-in accessory cable
DOMM	1 x 19-pin CA-COM female type connector with locking ring to 6 x Male XLR	1.5 m (5.0 ft)	Break-out accessory cable
DOMP-2	2 x 19-pin CA-COM male type connectors without locking rings	0.5 m (1.5 ft)	Cable extension/linking adaptor

Cable specifications

Cable	Conductors	Weight	Overall Diameter	Minimum Bend Radius		Operating Temp.	Compliance		
Type	Number x diameter	without connectors	Outer jacket	Occasional flexing	Fixed installation	Occasional flexing	NEC/CEC/UL Article 800 - CMP	Euroclass: ECA	RoHS: 2011/65/EU
DOMxx	18 x .0.22 mm^2 (AWG24)	0.19 kg/m (0.13 lb/ft)	12.2 mm	122 mm (4.8 in)	61 mm (2.4 in)	-20°C to + 70°C (-4°F to 158°F)	Yes	Yes	Yes
DOMF/M	6 x 3 x 0.22 mm^2 (AWG24)	N/A	N/A	N/A	N/A	-20°C to + 70°C (-4°F to 158°F)	Yes	Yes	Yes

L-Acoustics_cables_overview/12-25 © L-Acoustics, all rights reserved. Information subject to change without prior notice.

DOM CABLES (CONT)

Color coding /numbering

The cables within the DOM multicore are color coded (**Col**), with 3 conductors (**Con**) for the positive (**+**) negative (**-**) and ground/shield (**Gr**) connections and are allocated to the pins as follows:

Col	Con	Pin
	4 Gr	A
	4 +	B
	4 -	C
	3 Gr	D
	3 +	E
	3 -	F
	2 Gr	G
	2 +	H
	2 -	J
	1 Gr	K
	1 +	L
	1 -	M
	6 GR	N
	6 +	P
	6 -	R
	5 Gr	S
	5 +	T
	5 -	U
	NC	V

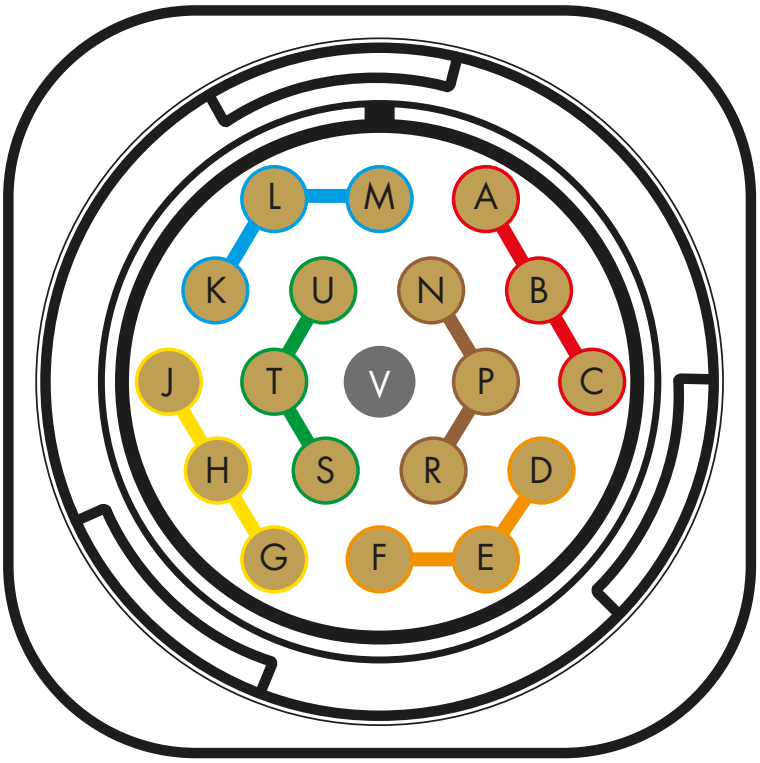

Male 19-pin CA-COM connector
(Example: LA-PANEL)

- Used pins
- Conductor (+) colors
- Unused pins

Advantages

Designed to distribute analog audio between LA-RAK II AVBs, through the LA-PANEL II and the XLR adaptors, DOM cables offer a reliable and tough connection solution. This standardized cabling system enables easy integration of cross rental hardware and enables analog signals to be used as primary or backup audio sources simply and efficiently.

Using DOM cables

- Six analog audio signals can be distributed across multiple LA-RAK II AVBs effciently and reliably
- XLR adaptors enable interfacing with P1 and other audio sources or destinations
- Cables can be extended and linked adding versatility

L-Acoustics_cables_overview/12-25 © L-Acoustics, all rights reserved. Information subject to change without prior notice.

SP CABLES

SP cables offer a streamlined connection solution for all L-Acoustics amplified controllers and loudspeaker systems that utilize the industry standard speakON™ connector format. SP cables can be used with LA12X and LA4X amplified controllers, and with LA2Xi if it has been fitted with the optional LA2Xi I/O-CON connector panel.

Cable types

SP cables are available in various pre-made lengths, and as unterminated bulk cable:

- **SPxx:** Are terminated with two speakON NL4 connectors and carry 2 channels of amplification. They are designed to be used primarily with LA12X and LA4X amplified controllers, to connect any speakON™ based L-Acoustics loudspeaker.
- **SP BULK CABLE:** Three types of unterminated bulk cable, supplied without connectors, are available. With a mix of conductor numbers and diameters depending on requirements.

The SP-Y1 accessory is a one in two out adaptor and enables SPxx cables, which carry four conductors and two audio channels down a single cable to be split to separate connectors for each audio channel. Facilitating the use of SP cables with a larger number of loudspeaker models across the L-Acoustics range.

Cable	Description	Length	Application
SP.7	2 x NL4 connectors, 4 x 4mm^2 conductors	0.7 m (2.3 ft)	Loudspeaker link cable
SP5	2 x NL4 connectors, 4 x 4mm^2 conductors	5 m (16.4 ft)	Can be used with: LA2Xi with I/O-CON, LA4X, LA12X, LA7.16 with BOB32
SP5BTL	2 x NL4 connectors, 2 x 2.5mm^2 conductors	5 m (16.4 ft)	To connect LA2Xi (equiped with LA2Xi I/O CON) in BTL mode
SP10	2 x NL4 connectors, 4 x 4mm^2 conductors	10 m (32.8 ft)	Can be used with: LA2Xi-I/O CON, LA4X, LA12X, LA7.16 with BOB32
SP25	2 x NL4 connectors, 4 x 4mm^2 conductors	25m (82 ft)	Can be used with: LA2Xi-I/O CON, LA4X, LA12X, LA7.16 with BOB32
SP2 2.5mm^2 BULK CABLE	2 x 2.5mm^2 conductors, unterminated cable	N/A	Can be ordered in custom lengths/ rolls, without connectors
SP2 4mm^2 BULK CABLE	2 x 4mm^2 conductors, unterminated cable	N/A	Can be ordered in custom lengths/ rolls, without connectors
SP4 4mm^2 BULK CABLE	4 x 4mm^2 conductors, unterminated cable	N/A	Can be ordered in custom lengths/ rolls, without connectors
SP-Y1	1 x Speaker cable break-out accessory: 1 x NL4 to 2 x NL2 connectors	1 m (3.3 ft)	Y-split cable accessory, supplied with CC4FP adaptor

Cable specifications

Cable	Conductors	Weight	Overall Diameter	Minimum bend radius		Operating Temp.		Compliance	
Type	Number x diameter	without connectors	Outer jacket	Occasional flexing	Fixed installation	Occasional flexing	Fixed installation	Low Voltage Directive: 2014/35/EU	RoHS: 2011/65/EU
SP 2x2.5mm^2	2 x 2.5 mm^2 (AWG13)	0.11 kg/m (0.24 lb/ft)	8 mm (0.81 in)	120 mm (4.72 in)	40.0 mm (1.57 in)	-25°C to + 70°C (-13°F to 158°F)	-40°C to + 80°C (-40°F to 176°F)	No	Yes
SP 2x4mm^2	2 x 4 mm^2 (AWG11)	0.19 kg/m (0.42 lb/ft)	10.2 mm (0.81 in)	102 mm (4.01 in)	51.0 mm (2.00 in)	-30°C to + 70°C (-22°F to 158°F)	-40°C to + 80°C (-40°F to 176°F)	Yes	Yes
SP 4x4mm^2	4 x 4 mm^2 (AWG11)	0.3 kg/m (0.68 lb/ft)	12.2 mm (0.81 in)	122 mm (4.80 in)	61.0 mm (2.40 in)	-30°C to + 70°C (-22°F to 158°F)	-40°C to + 80°C (-40°F to 176°F)	Yes	Yes

L-Acoustics_cables_overview/12-25 © L-Acoustics, all rights reserved. Information subject to change without prior notice.

SP CABLES (CONT)

Color coding /numbering

The individual conductors (**Con**) are numbered 1-4 and allocated to the pins, along with the amplifier outputs (**Out**), as follows:

Con	Pin	Out
1	1+	1+
2	1-	1-
3	2+	2+
4	2-	2-
1	1+	3+
2	1-	3-
3	2+	4+
4	2-	4-

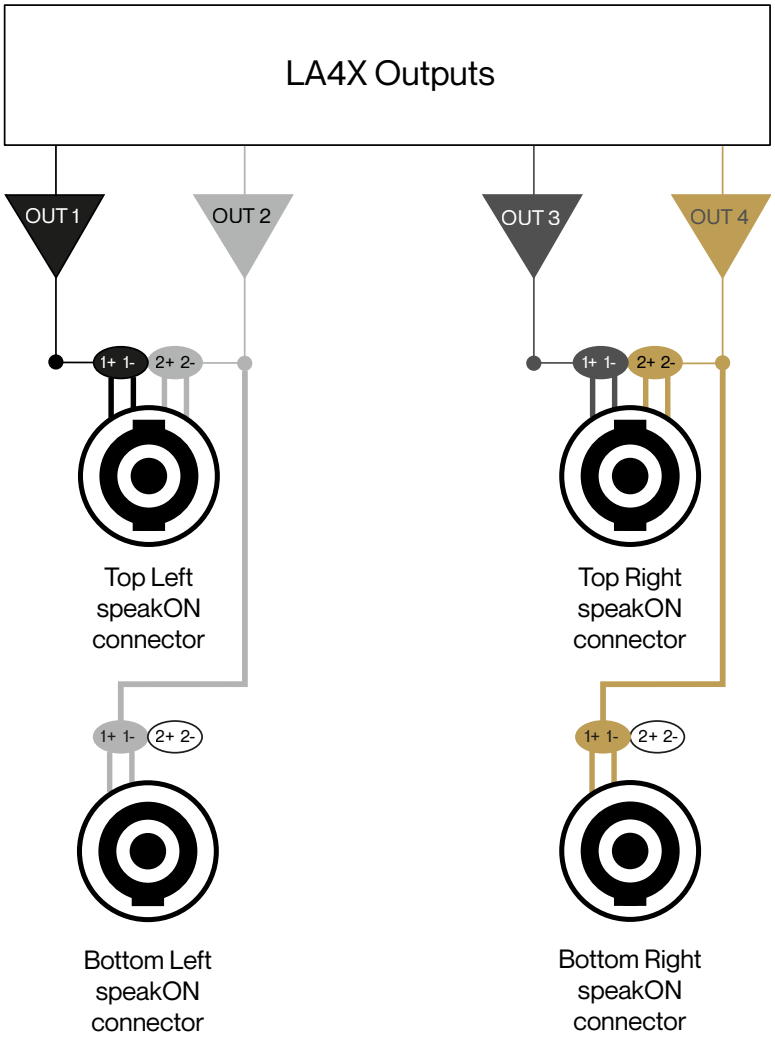

Advantages

Designed to interface four channel amplified controllers, such as LA4X, with L-Acoustics loudspeaker enclosures that use speakON™ connectors, SP cables are user-friendly and also robust and resilient. The accessories add versatility by enabling SP cables to support a wide range of L-Acoustics systems.

Using SP cables

- Convenient connections with speakON™ based L-Acoustics loudspeaker systems
- Flexible and reliable interfacing with four channel amplified controllers
- Offers resilience to frequent winding/unwinding due to the highly flexible, but durable cable

L-Acoustics_cables_overview/12-25 © L-Acoustics, all rights reserved. Information subject to change without prior notice.

DO CABLES

L-Acoustics DO cables deliver a straightforward connection solution when interfacing LA12X amplified controllers and K Series loudspeaker systems. They utilize an 8-pin connector to transport the four output channels of LA12X. Utilized in combination with the available accessories they can also connect other L-Acoustics loudspeaker models with these amplified controllers.

Cable types

DO cables are available in various pre-made lengths and as unterminated bulk cable:

- **DOxx:** Terminated with a male and female CA-COM connector, with locking rings at each end of the cable and are designed to be used with LA12X amplified controllers, primarily to connect K1 and K2 loudspeaker systems.
- **DO 8 BULK CABLE:** Unterminated bulk cable, supplied without connectors, enabling custom length cables to be made.

Several accessories enable the use of DO cables to be expanded, simplifying the interconnections of wide range of L-Acoustics systems and loudspeakers.

Cable	Description	Length	Application
DO.7	2 x 8 pin CA-COM connectors male & female types, both with locking rings	0.7 m (2.3 ft)	K1, K2 loudspeaker link cable
DO5	2 x 8 pin CA-COM connectors male & female types, both with locking rings	5 m (16.4 ft)	K1, K2 loudspeaker connection cable
DO10	2 x 8 pin CA-COM connectors male & female types, both with locking rings	10 m (32.8 ft)	K1, K2 loudspeaker connection cable
DO25	2 x 8 pin CA-COM connectors male & female types, both with locking rings	25m (82 ft)	K1, K2 loudspeaker connection cable
DO 8 BULK CABLE	8 x 4mm^2 unterminated loudspeaker cable	N/A	Can be ordered in custom lengths/ rolls, without connectors
DO10P	2 x 8 pin CA-COM connectors male & female types, both without locking rings	10 m (32.8 ft)	Cable extension adaptor - with 2 x female CA-COM
DO3WFILL	1 x Speaker cable break-out accessory: 1 x 8 pin CA-COM, male type, without locking ring, to 2 x NL2 and 1 x NL4 connectors	3 m (9.85 ft)	For connecting three loudspeakers: one utilizing NL4 (eg Kara II) and two using NL2 (eg SB18)
DOFILL-LA8	1 x Speaker cable break-out accessory: 1 x 8 pin CA-COM, male type without locking ring, to 2 x NL4 connectors	3.5 m (11.5 ft)	For loudspeakers utilizing NL4 connectors
DOSUB-LA8	1 x Speaker cable break-out accessory: 1 x 8 pin CA-COM, male type, without locking ring, to 4 x NL2 connectors	5 m (16.4 ft)	For loudspeakers utilizing NL2 connectors

Cable specifications

Cable	Conductors	Weight	Overall Diameter	Minimum bend radius		Operating Temp.		Compliance	
Type	Number x diameter	without connectors	Outer jacket	Occasional flexing	Fixed installation	Occasional flexing	Fixed installation	Low Voltage Directive: 2014/35/EU	RoHS: 2011/65/EU
DO	8 x 4 mm (AWG11)	0.78 kg/m (0.52 lb/ft)	20.7 mm (0.81 in)	207 mm (8.15 in)	103.5 mm (4.07 in)	-30°C to + 70°C (-22°F to 158°F)	-40°C to + 80°C (-40°F to 176°F)	Yes	Yes

L-Acoustics_cables_overview/12-25 © L-Acoustics, all rights reserved. Information subject to change without prior notice.

DO CABLES (CONT)

Color coding /numbering

The individual conductors (**Con**) are color coded and allocated to the pins and amplified controller outputs (**Out**) as follows:

Con	Pin	Out
	A	1+
	B	1-
	C	2+
	D	2-
	E	3+
	F	3-
	G	4+
	H	4-

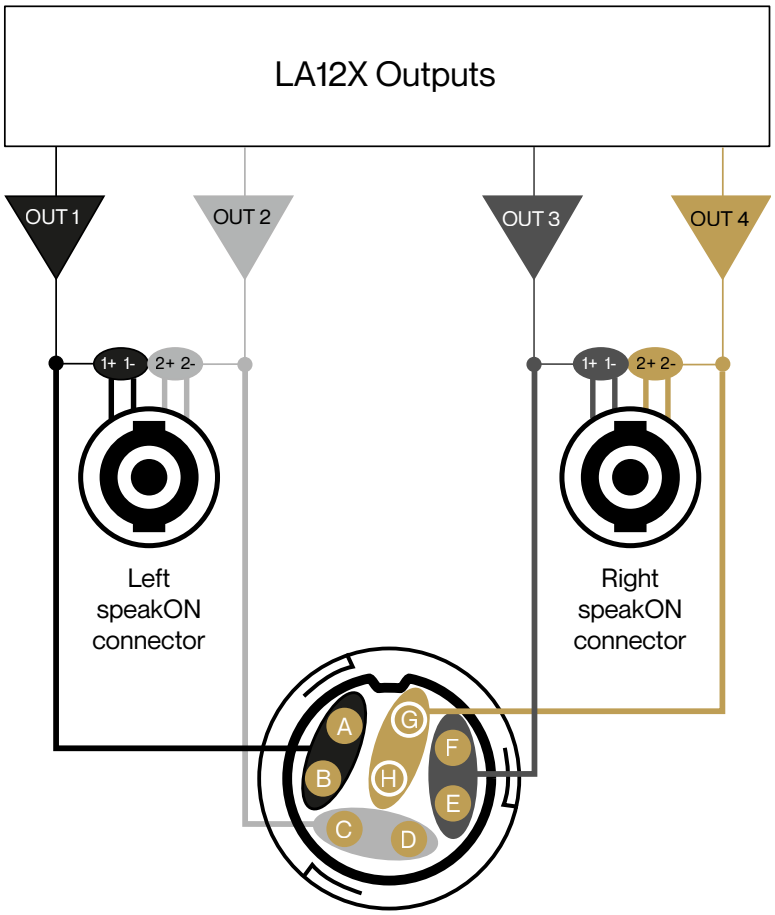

Female 8-pin CA-COM connector
(Example: LA12X rear panel)
Used pins

Advantages

Designed to interface LA12X amplified controllers with K Series loudspeaker enclosures using a single connection, DO cables are convenient and straightforward to use. They have been developed with reliability and durability in mind, using rugged MIL-spec multipin connectors and high performance cable. The accessories add versatility by enabling DO cables to be used with a wide range of L-Acoustics systems, through conversion to NL4 and NL2 speakON connectors.

Using DO cables

- All audio channels use a single cable when connecting LA12X amplified controllers and K1 or K2 loudspeakers
- Efficient setup and breakdown of systems for touring applications
- Touring applications benefit from the ruggedized and reinforced materials used
- Accessories expand the applications for DO cables and LA12X amplified controllers adding flexibility

L-Acoustics_cables_overview/12-25 © L-Acoustics, all rights reserved. Information subject to change without prior notice.

SC32 CABLES

L-Acoustics SC32 cables offer a slick and efficient connection solution for LA-RAK III or individual LA7.16 and LA7.16i amplified controllers with L Series loudspeaker systems. They can also connect to other L-Acoustics loudspeakers when used in combination with accessories. The SC32 utilizes a 37-pin connector, of which 32 pins are used to transport 16 outputs from the amplified controller.

Cable types

Three types of SC32 cable are available, with different terminations and applications:

- **SC32-xx**: Are terminated with a male and female SC32 connector, both with locking rings, at each end of the cable and are designed to be used with LA7.16 amplified controllers, primarily in touring applications.
- **SC32-xx BE**: These are terminated with a single female SC32 connector with 32 bare end conductors on the other end and are adapted for use with LA7.16i amplified controllers in installation applications. They can also be used in situations where a junction box is positioned between the L Series loudspeakers and the main cable run.
- **SC32-500 REEL**: A single 500 meter reel of unterminated bulk cable, enabling the manufacture of custom cable lengths.

There are also several accessories available that enable the use of SC32 cables and LA7.16(i) amplified controllers to be expanded, benefiting many other L-Acoustics systems in addition to L Series.

Cable	Description	Length	Application
SC32-5	2 x SC32 connectors male & female types, both with locking rings	5 m (16.4 ft)	When using LA7.16 amplified controllers
SC32-10	2 x SC32 connectors male & female types, both with locking rings	10 m (32.8 ft)	When using LA7.16 amplified controllers
SC32-25	2 x SC32 connectors male & female types, both with locking rings	25 m (82 ft)	When using LA7.16 amplified controllers
SC32-50	2 x SC32 connectors male to female types, both with locking rings	50 m (164 ft)	When using LA7.16 amplified controllers
SC32-5 BE	1 x SC32 connector female type with locking ring to bare ends	5 m (16.4ft)	Installations using LA7.16i amplified controllers
SC32-10 BE	1 x SC32 connector female type with locking ring to bare ends	10 m (32.8 ft)	Installations using LA7.16i amplified controllers
SC32-500 REEL	Bulk reel of unterminated cable	500 m (1640 ft)	A single 500 meter reel for custom cable manufacturer
SC32P	2 x SC32 connectors male and female types, both without locking rings	0.3 m (0.99ft)	Cable extension adaptor for connecting two SC32 cables together
SC32-4DO	1 x Speaker cable break-out accessory: SC32 (male type) to 4 x CA-COM	2 m (6.5 ft)	For use with K2 systems
BOB32	1 x Break-out box accessory: SC32 to 2 x CA-COM + 8 x NL4	N/A	For use with systems supporting CA- COM and/or NL4/2 connectors

Cable specifications

Cable	Conductors	Weight	Overall Diameter	Minimum bend radius		Operating Temp.		Compliance	
Type	Number x diameter	without connectors	Outer jacket	Occasional flexing	Fixed installation	Occasional flexing	Fixed installation	Low Voltage Directive: 2014/35/EU	RoHS: 2011/65/EU
SC32	32 x 1.5 mm (AWG16)	0.904 kg/m (1.9 lb/ft)	21.9 mm (0.86 in)	164.3 mm (6.47 in)	87.6 mm (3.45 in)	0°C to + 70°C (32°F to 158°F)	-40°C to + 80°C (-40°F to 176°F)	Yes	Yes

L-Acoustics_cables_overview/12-25 © L-Acoustics, all rights reserved. Information subject to change without prior notice.

SC32 CABLES (CONT)

Color coding /numbering

The individual conductors (**Con**) are numbered 1-32 and allocated to the pins and amplifier outputs (**Out**) as follows:

Con	Pin	Out	Con	Pin	Out
1	N	7+	17	R	8+
2	W	10-	18	Z	11-
3	V	10+	19	f	14-
4	U	9-	20	k	16-
5	M	6-	21	j	16+
6	c	13+	22	h	15-
7	b	12-	23	g	15+
8	T	9+	24	a	12+
9	L	6+	25	S	8-
10	F	3-	26	K	5-
11	G	4+	27	E	3+
12	e	14+	28	A	1+
13	P	7-	29	B	1-
14	X	11+	30	C	2+
15	d	13-	31	D	2-
16	J	5+	32	H	4-

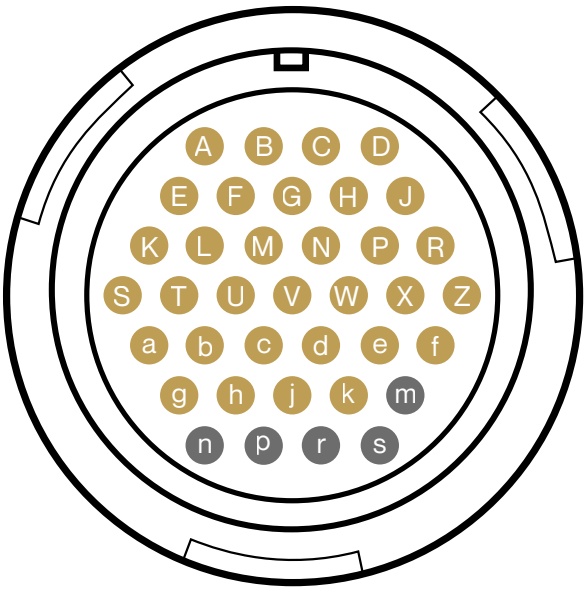

Male SC32 connector
(Example: L Series rear panel)

Used pins
Unused pins

Advantages

SC32 cables have been specifically developed to facilitate reliable connections with L Series loudspeaker systems. They simplify the interfacing of LA7.16(i) 16 channel amplified controllers with each loudspeaker element using a single cable and the built-in cable management system of the loudspeakers. The accessories add versatility by enabling SC32 cables and LA7.16(i) to be used with a wide range of L-Acoustics systems in both touring and fixed installation applications.

Using SC32 cables

- All audio channels utilize a single connector when coupling LA7.16(i) amplified controllers and L Series loudspeakers
- Cables are designed to clip into the built-in cable management system on the rear of L Series elements
- Accessories expand the applications for both SC32 cables and LA7.16(i) amplified controllers, adding versatility
- They offer reliable and robust locking connectors
- Custom designed cable has a tough and protective exterior, but is still flexible and easy to work with

L-Acoustics_cables_overview/12-25 © L-Acoustics, all rights reserved. Information subject to change without prior notice.