I SERIES

BalancePoint™ Flyware

For Point Source and
Subwoofer loudspeakers
models IP8, IP6, IS8, and IS6

DFS

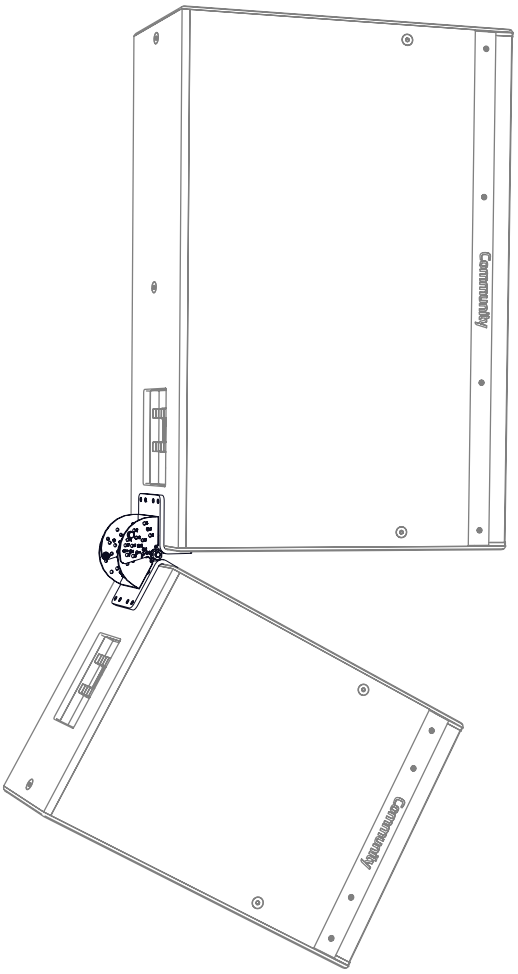

Downfill Splay Bracket Kit

The BalancePoint™ Flyware Accessory Guide (a complete set of instructions for all of the BalancePoint™ Flyware Kits) is available on the Community website.

Community Professional Loudspeakers
333 East Fifth Street, Chester, PA 19013-4511 USA
Phone (610) 876-3400 • Fax (610) 874-0190
communitypro.com • info@communitypro.com

CAUTION: Installation of loudspeakers should only be performed by trained and qualified personnel. It is strongly recommended that a licensed and certified professional structural engineer approve the mounting design.

IMPORTANT SAFETY INSTRUCTIONS

Always follow these basic safety precautions when using or installing I SERIES loudspeakers and accessories:

- Read these instructions prior to assembly.
- Keep these instructions for reference.
- Heed all warnings.
- Follow all instructions, particularly those pertaining to rigging, mounting, hanging and electrical connections.
- Do not use this apparatus near water.
- Clean only with dry cloth.
- Do not block any ventilation openings. Install in accordance with the manufacturer's instruction.
- Do not install near any heat sources such as radiators, heat registers, stoves,light fixtures, or other apparatus (including amplifiers) that produce heat.
- Only use attachments and accessories that are specified and approved by the manufacturer.

Refer all servicing to qualified service personnel. Servicing is required when the apparatus has been damaged in any way, such as liquid has been spilled or objects have fallen into the apparatus, the apparatus has been exposed to rain or moisture, does not operate normally, or has been dropped.

The terms CAUTION, WARNING, and DANGER may be used in this manual to alert the reader to important safety considerations. If you have any questions or do not understand the meaning of these terms, do not proceed with installation. Contact your local dealer, distributor, or call Community directly for assistance. These terms are defined as:

CAUTION: describes an operating condition or user action that may expose the equipment or user to potential damage or danger.

WARNING: describes an operating condition or user action that will likely cause damage to the equipment or injury to the user or to others in the vicinity.

DANGER: describes an operating condition or user action that will immediately damage the equipment and/or be extremely dangerous or life threatening to the user or to others in the vicinity.

These installation instructions are for use by qualified personnel only. To reduce the risk of fire or electric shock do not perform any servicing other than that contained in the operating instructions unless you are qualified to do so.

UNPACKING / INSPECTION

Community I SERIES loudspeakers are engineered and manufactured to be rugged and they are carefully packed in sturdy cartons. However, it is recommended to thoroughly inspect each unit after it has been removed from the packaging, as damage could occur during shipping.

Please note that once the shipment has left your dealer or the Community factory, the responsibility for damage is always borne by the freight company. If damage has occurred during shipping, you must file a claim directly with the freight company. It's very important to contact the freight company as soon as possible after receiving your shipment, as most freight companies have a short time limit within which they will investigate claims. Make sure to save the carton and the packing material, as most claims will be denied if these materials are not retained. Your Community dealer and the factory will try to help in any way they can, but it is the responsibility of the party receiving the shipment to file the damage claim.

It is always a good idea to retain the carton and packing materials, if possible, in the event that the unit may need to be returned to your dealer or distributor for repair in the future.

CAUTION: Installation of I SERIES loudspeakers should only be performed by trained and qualified personnel. It is strongly recommended that a licensed and certified professional structural engineer approve the mounting. Severe injury and/or loss of life may occur if this product is improperly installed.

RIGGING SAFETY / IMPORTANT NOTES

There are three primary areas of responsibility for rigging loudspeakers. The first is the building structure. Always consult with the building architect or structural engineer to assure the ability of the structure to support the loudspeaker system. The second area of responsibility is the loudspeaker itself. Community certifies its loudspeaker systems and rigging accessories for suspension when they are properly installed according to our published guidelines. The third area of responsibility is everything between the loudspeaker and the building structure and the actual process of installation. The installing contractor assumes this responsibility. Loudspeaker rigging should be performed only by certified rigging professionals using certified rigging hardware chosen for the specific application. Prior to installation, the contractor should present a rigging plan, with drawing and detailed parts list, to a licensed structural engineer (P.E.) or architect for written approval.

IMPORTANT: I SERIES loudspeakers are designed and intended to be mounted to differing building surfaces using a variety of rigging hardware, means and methods. Installation of loudspeakers should only be performed by trained and qualified personnel. All electrical connections must conform to applicable city, county, state, and national (NEC) electrical codes.

DANGER: All rigging fittings must be fully tightened and secured. Any missing fasteners or parts will compromise the structural integrity of the enclosure and constitute a safety hazard. Over-tightening (crushing the wood) should be avoided as well. Do not suspend the loudspeaker unless all fasteners are securely in place!

IMPORTANT: The flat head bolts that come installed in each enclosure must remain in place or be replaced by a threaded fastener from an array bracket. The bolts attach to internal metal brackets that are critical to the structural integrity and rated Safe Working Load (SWL) of each point and each array assembly. Failure to include a fastener in every location could lead to serious injury, or even death.

DANGER: I SERIES rigging fittings are rated at a Working Load Limit (WLL) of 150 lbs (68 kg) with a 10:1 safety margin. No single rigging fitting should ever be subjected to a load that is greater than this stated limit. Failure to heed this warning could result in injury or death!

ARRAY ACCESSORIES

DFS - Downfill Splay Bracket Kit

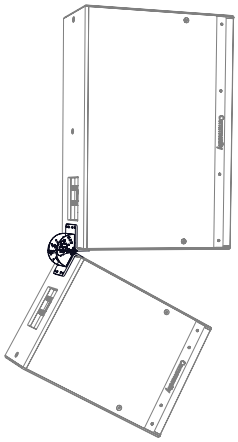

APPLICATION: Suspend and splay a vertically oriented enclosure under another vertically oriented enclosure or loudspeaker array.

ASSEMBLY:
The array should be assembled from the top down by attaching the cabinet bracket to what will be the top cabinet and then suspending it and adding the lower cabinet.

Best Practices:

Set the loudspeakers on a protected surface in the proper arrangement before assembling the array. Remove only the flat head bolts in the cabinet that are necessary to mount the rigging brackets. All other bolts should be left in place.

All bolts should be fully tightened before the assembly is lifted into place.

Parts:

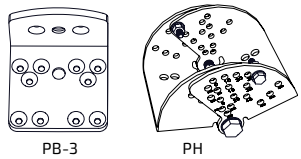

PB-3: Cabinet Brackets (2)
PH: Hinge Preassembly (1)

Hardware:

Qty	Code	Description
2	HH6	6 x 25 mm Hex Hd Bolts
2	HN6	M6 Locknuts
4	HW6	6mm Flat Washers
4	HH8-2	8 x 25 mm Hex Hd Bolts
4	HF8-3	8 x 30 mm Flat Hd Bolts
4	HN8	M8 Locknuts
8	HW8	8mm Flat Washers
4	HF1-3	10 x 35 mm Flat Hd Bolts
1	HH1-12	10 x 120 mm Hex Hd Bolt
2	HW1	10 mm Flat Washers
1	HN1	M10 Locknut

Some of the hardware listed above will be included in plate and hinge preassemblies.

Kit Weight: 10.0 lb (4.5 kg)

1

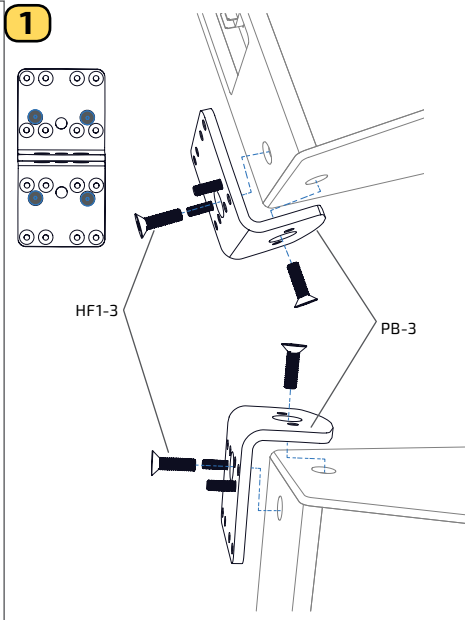

Figure 1. Confirm that the 8mm flat head bolts are threaded into each cabinet bracket as shown, and attach them to the cabinets

2

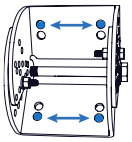

Use outside mounting points (marked)

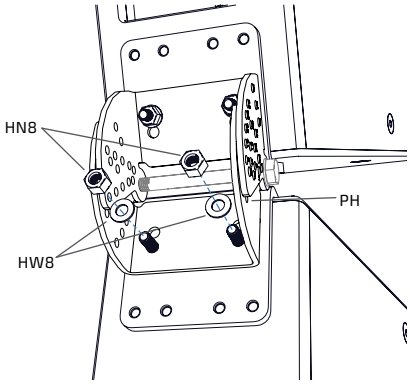

Figure 2. Remove 6mm hardware (securing the angle) and attach the hinge to the upper cabinet and then the lower one - leave connections loose until both cabinets have been connected

3

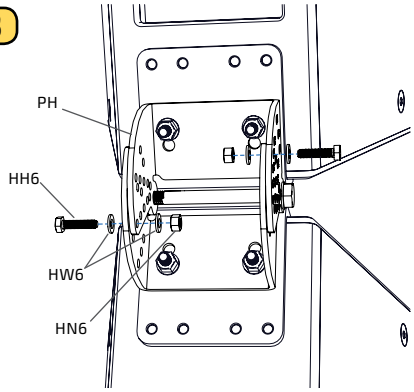

Figure 3. Set the splay angle by reattaching the 6mm hardware

4

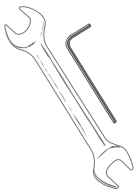

Figure 4. Fully tighten **all** connections

TECHNICAL DRAWINGS

HINGE (ROTATIONAL ARRAY) BRACKET [PH]

Drawings not to scale

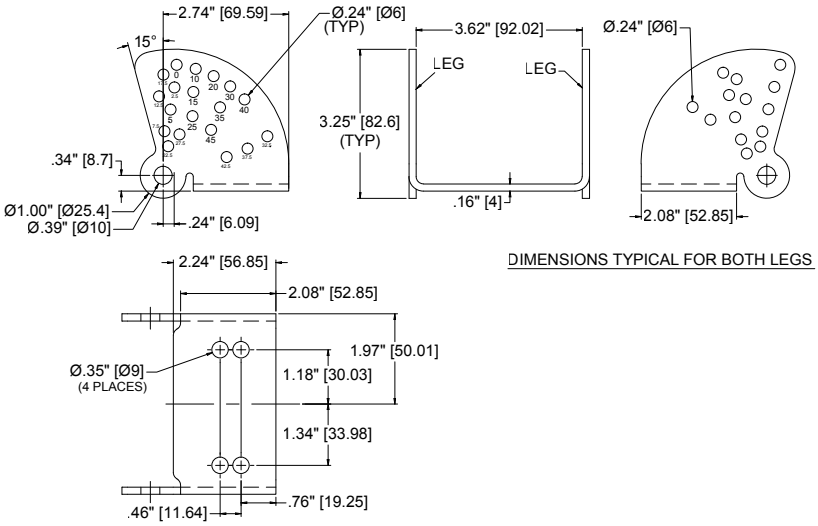

CABINET CORNER BRACKET (2-WAY) [PB-3]

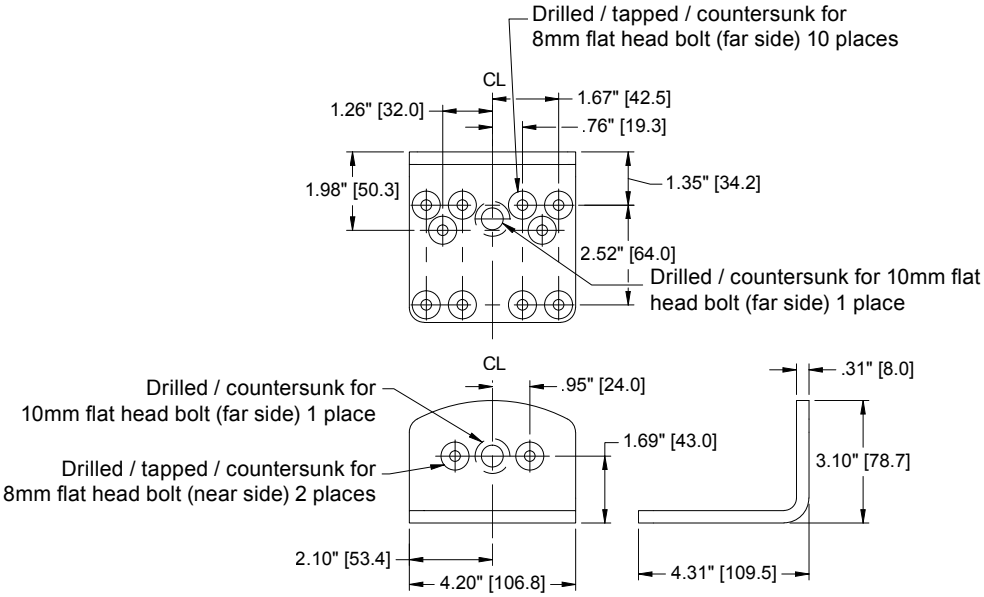

LOUDSPEAKER WEIGHTS

FULL-RANGE	*600 Level [lbs (kg)]*	*800 Level [lbs (kg)]*	*SUBWOOFER*	*600 Level [lbs (kg)]*	*800 Level [lbs (kg)]*
IP6/8-1122	65.0 (29.5)	55.0 (24.9)	IP6/8-112	64.0 (29.0)	58.0 (26.3)
IP6/8-1152	79.0 (35.8)	68.0 (30.8)	IP6/8-115	78.0 (35.4)	72.0 (32.7)
IP8-1153	-	105.0 (47.6)	IP6/8-118	97.0 (44.0)	98.0 (44.5)
IP8-0002	-	63.0 (28.6)	IP6/8-212	101.0 (45.8)	89.0 (40.4)
IP8-1151	-	54.0 (24.5)	IP6/8-215	126.0 (57.2)	14.0 (51.7)
			IP6/8-218	170.0 (77.1)	172.0 (78.0)

ROTATIONAL (HINGE) BRACKET

ROTATIONAL (HINGE) BRACKET ANGLE EXPLAINED

The I SERIES full-range loudspeakers are in trapezoidal enclosures. The hinge bracket is used in many of the array kits to precisely set the angle between two loudspeakers. The hinges are shipped preassembled with the 6mm fasteners already in place. They will need to be removed to set your desired splay angle.

IMPORTANT: The splay angles printed on the rotational bracket indicate the angle between adjacent enclosure surfaces, not (in most cases) the center-to-center (C-C) loudspeaker aiming angles. For most horizontal and vertical arrays, the long trapezoidal sides of the enclosures will be adjacent. The total included trapezoidal cabinet angles are 30° therefore, the C-C loudspeaker aiming angles will be 30° greater than the enclosure splay angle indicated on the rotational bracket.

For example, if a C-C loudspeaker array angle of 45° is desired, the 6mm angle selection fasteners should be placed in the "15°" angle selection holes on the rotation brackets. 45° (C-C splay angle) – 30° (trapezoidal cabinet angles) = 15° (splay between adjacent enclosure surfaces).

When using the DVS-BFR22 or DFS kits, the non-angled top and/or bottom panels are adjacent, therefore, the loudspeaker aiming angle and adjacent enclosure surface splay angles are identical. For these kits, the angle selected on the rotational bracket is the same thing as the loudspeaker aiming angle.

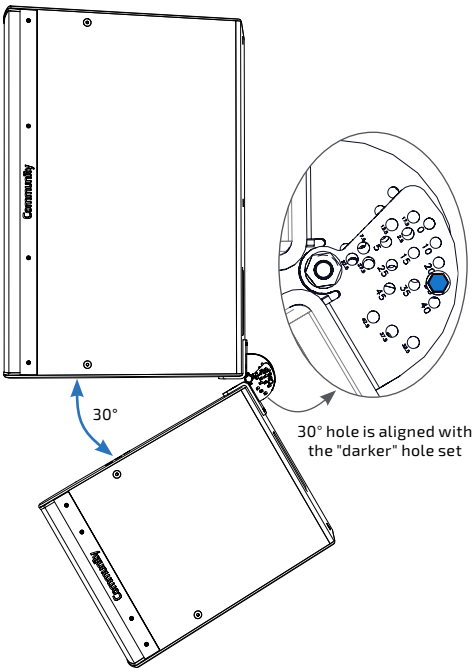

DFS kit shown with IP8-1153 and IP8-1151 30° splay shown which also equals the center-to-center measurement

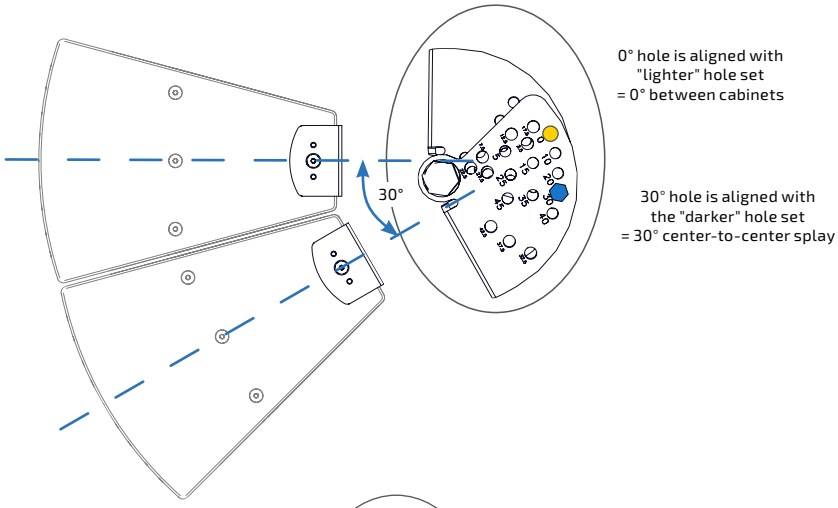

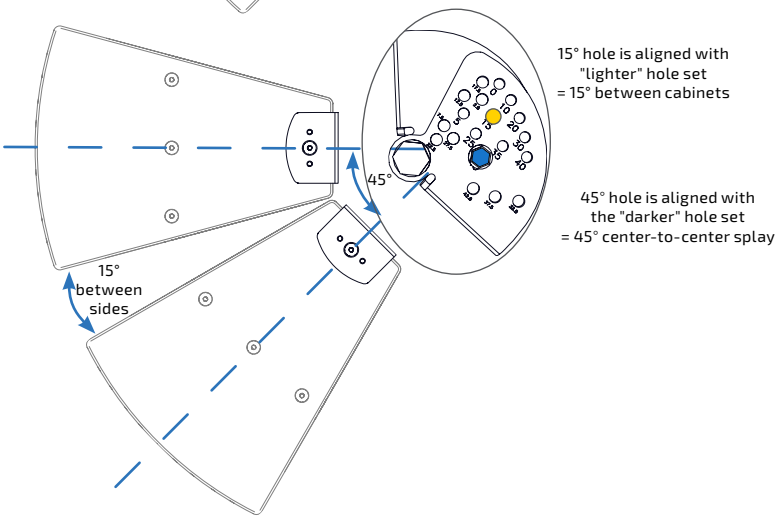

Basic cabinet geometry and aiming angles

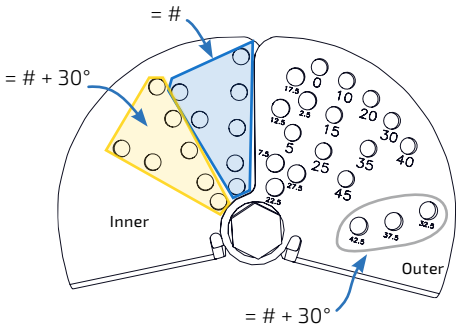

To set angle:
For most applications, and to achieve center-to-center (C-C) angles greater than 45° you align the "lighter" set of holes with the marked degree. This number equals the angle <u>between</u> the loudspeakers, and you should add 30 to get the C-C measurement. To achieve 62.5°, 67.5°, or 72.5° (C-C) splay, the circled outside holes only align with the holes in the "darker" marked area.

Aligning the "darker" set of holes with the marked degree hole equals that angle between centers, and should be used for downfill (DVS-BFR22, DFS) kits.

GENERAL ROTATIONAL (HINGE) BRACKET INFORMATION

Figures showing the basic assembly and how to secure the angles are shown below.

IMPORTANT: Each hinge is shipped preassembled with a 10mm hinge bolt and locknut fastened to allow some movement. Once the angle is permanently set (and confirmed by commissioning the system), the locknut should be tightened to prevent any movement. Do not remove the locknut or hinge bolt for any reason.

Each hinge assembly also has two 6mm fasteners with finger-tight lock nuts inserted into angle selection holes on each side of the hinge. Both 6mm fastener sets may be removed for assembly but must all be re-inserted and fully tightened in accordance with each kit's specific assembly instructions.

Angles may be adjusted in 2.5° increments from 0° to 45° in any array configuration. Although it is possible in some configurations, do not exceed a splay angle of 45° (between adjacent sides).

Best practices: Orient the fasteners in the hinges to follow the direction of gravity; i.e. if the hinge will be used with the hinge bolt vertically oriented, position the hinge with the nut at the bottom to prevent the bolt from falling out if the nut should loosen.

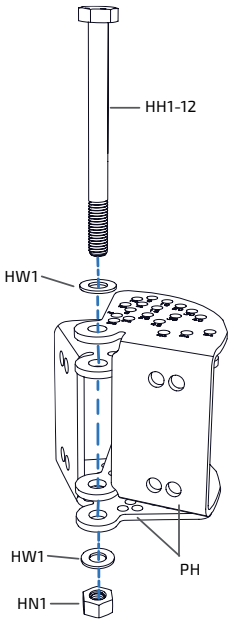

Hinge (rotational bracket) assembly exploded (shipped preassembled)

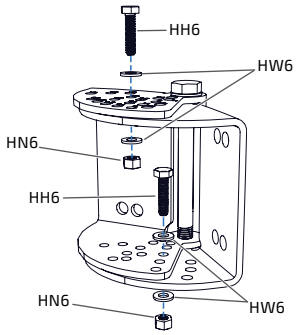

Horizontal arrays

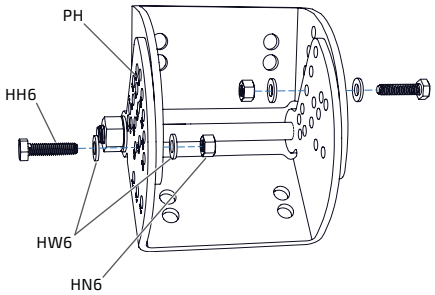

Vertical arrays

Secure angle with 6mm fasteners. The hinge is shipped with the fasteners in the 45° holes.

Use the four inner attachment points for HSB, HVS, or VSB kits

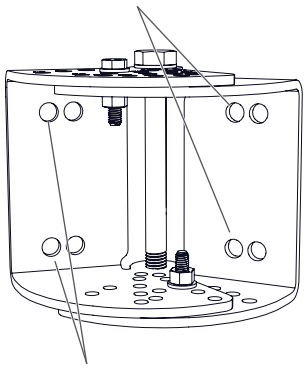

Use the four outer attachment points in DFS and DVS-BFR22 configurations

The hinge brackets have 2 sets of holes to attach the hinges to the cabinets. Bolt placement diagrams showing connection to the cabinet brackets are in each of the individual kit instructions.

HELPFUL INSTALLATION TIPS

- Assemble the horizontal arrays on the ground (or lifting surface) and then lift the entire assembly into place. Large vertical arrays should be assembled top down - lifting each component and attaching it in order. Smaller vertical arrays can be assembled on the ground and then flown.
- Many brackets and plates come preassembled with the 8mm flat head hardware installed. Some of the corner brackets have differing bolt patterns and we preinstall them in the most common configuration for that kit. Refer to the diagrams on install pages to confirm that the bolts are in the correct position for your cabinet size.
- Assemble the array with the differing models (horn/coverage patterns) in the correct configuration.
- If the cabinets are horizontal, keep the input panels all on the same side for wiring ease, whenever possible.
- To determine the approximate splay or array angles prior to installation, use simulation software such as EASE®. Document those values, and set the angles on the hinges and splay brackets as they are attached to the cabinets.
- When attaching corner brackets, thread both bolts in finger tight first, then continue to tighten equally with hex wrenches (helps avoid misalignment issues).
- Fully tighten the connections as each assembly is finished without crushing the wood fibers.
- The U-Brackets, Vertical Yokes and Isometric Frames have hole patterns compatible with third party manufacturers' adapter plates for 1-1/2" NPT rigid pole mounting systems (such as Chief CMA105 UL listed Ceiling mounting systems, with a SWL rating of 500 lbs [226.7 kg]). See manufacturer's website for details.
- Contact our Technical Assistance Group (TAG) for additional guidance by phone: (610) 876-3400 or email: tagteam@communitypro.com.

GENERAL ASSEMBLY INFORMATION

The BalancePoint™ Flyware kits for the I SERIES loudspeakers are modular and can be combined in a number of ways. The most common configuration of each kit is shown along with instructions for assembly.

Hardware and Parts: There is a key at the beginning of each instruction that shows the parts, their quantity and abbreviation. We also use a shortened code for the hardware that offers an easy reference to the type, diameter and approximate length.

ex: HW6 = Hardware Washer 6mm;
HF1-2 = Hardware, Flat head bolt, 10 x 25mm

Several parts have underside countersunk holes that are threaded for 8mm flat head bolts. They should be fully seated (at or below the surface of the piece) before attaching the plate/bracket to the enclosure. Bolt placement diagrams are shown for the cabinet brackets that have multiple holes. Several of the brackets are shipped with the 8mm flat head bolts already installed in the most common configuration for that kit.

TOOLS NEEDED FOR ASSEMBLY:

- Metric socket and ratchet set
- Metric wrench set
- Metric hex key set

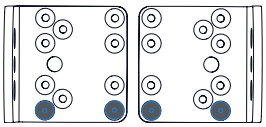

Typical bolt placement diagram for 2-way Cabinet (angle) Bracket (PB-3)

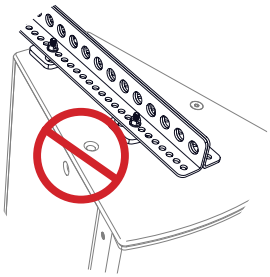

The loudspeaker enclosure must have fasteners in all threaded holes

IMPORTANT: The flat head bolts that come installed in each enclosure must remain in place or be replaced by a threaded fastener from an array bracket. The bolts attach to internal metal brackets that are critical to the structural integrity and rated Safe Working Load (SWL) of each point and each array assembly. Failure to include a fastener in every location could lead to serious injury, or even death.

SAFETY CABLES

IMPORTANT: Attach a safety cable to one of the unused mounting points on the loudspeaker (and/or the bracket assembly). Safety cables must be secured to a suitable load-bearing point separate from the loudspeaker mounting point, with as little slack as possible, oriented to minimize dynamic swinging of the load, so as not to develop undue shock or kinetic force if the loudspeaker mount were to fail. Safety cables and hardware are not included. Please consult a structural engineer for the appropriate cables, hardware, and location(s) for the load and application.

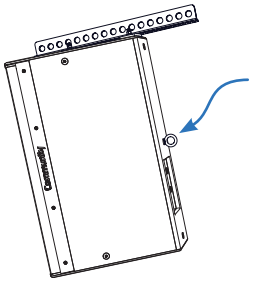

Typical placement for safety cable and hardware (eyebolt not included)

BALANCEPOINT™ FLY RAILS

Positioning:

- The fly rails may be mounted in any position required as long as **all** attachment points are used.
- For the best aesthetics, the fly rails should not extend beyond the front edge of the front cabinet.
- The fly rails can extend beyond the back of the cabinet.
- The rails should be attached to the cabinets using all of the connections shown in the instructions for each assembly. This will ensure that the cabinets don't rotate on the rigging and that the rigging is securely attached to the cabinets.
- In "Subwoofer Behind" configurations, the general rule of thumb is that there shouldn't be less than 6" (152mm) between the face of the subwoofer and the rear of the cabinet in front of it (allows sufficient air movement from the subwoofer cones and parts).

Flying:

- Optimally, each array should be lifted from the hole(s) on the fly rails that produce the desired tilt angle using gravity alone (the "Balance Point").
- A second cable may be used to fine-tune the exact aiming angle and/or stabilize the array from rotation as necessary.

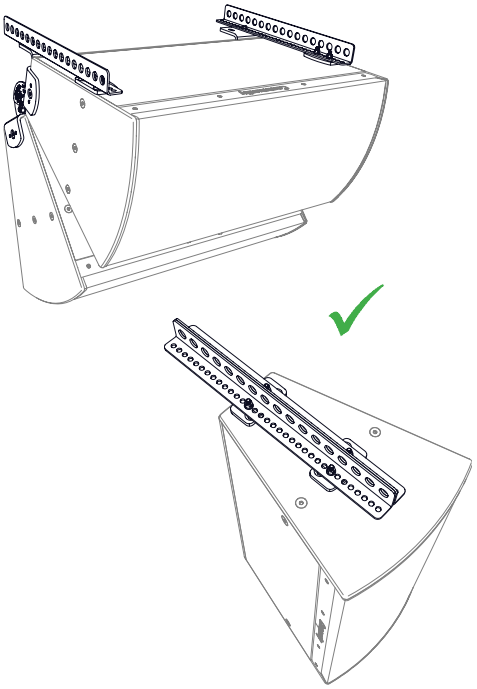

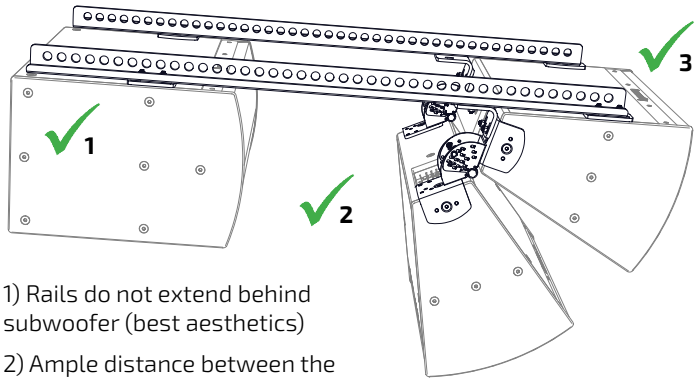

1) Rails do not extend behind subwoofer (best aesthetics)

2) Ample distance between the subwoofer and full-range cabinets

3) Fly rails well behind cabinet face

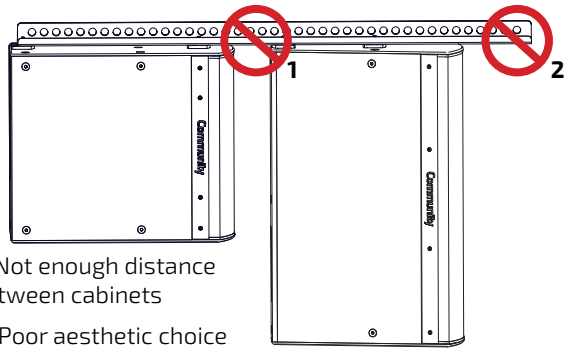

1) Not enough distance between cabinets

2) Poor aesthetic choice