Desono™
EX Surface Mount Loudspeakers
Installation & Operation Guide

Models
EX-S6
EX-S8
EX-S10
EX-S10SUB

PRODUCT DESCRIPTION

The Desono™ EX product family includes three two-way full-range and one subwoofer surface-mount loudspeaker designs. They deliver excellent musicality and high intelligibility with deep extended bass response and wide, conical coverage patterns.

The loudspeakers are designed to be used in both indoor and outdoor environments and share attractive modern aesthetic styling. The loudspeakers can be mounted with our innovative ClickMount™ pan-tilt system than provides indexed aiming control. A ClickMount U-Bracket also is available for low profile mounting to a structure.

FEATURES

- Three sizes to deliver exceptional audio clarity with small footprints
- Uniform coverage from coaxially mounted HF/LF drivers
- A companion subwoofer for additional high SPL low frequencies
- 5-position tap for 70V/100V systems with low impedance bypass
- ETL listed to comply with UL 1480A, CE and RoHS compliant
- Pending CSA 62368-1, EN54-24, and ISO 7240-24 (ROW) certification for full-range models

PRODUCT REPRESENTATION

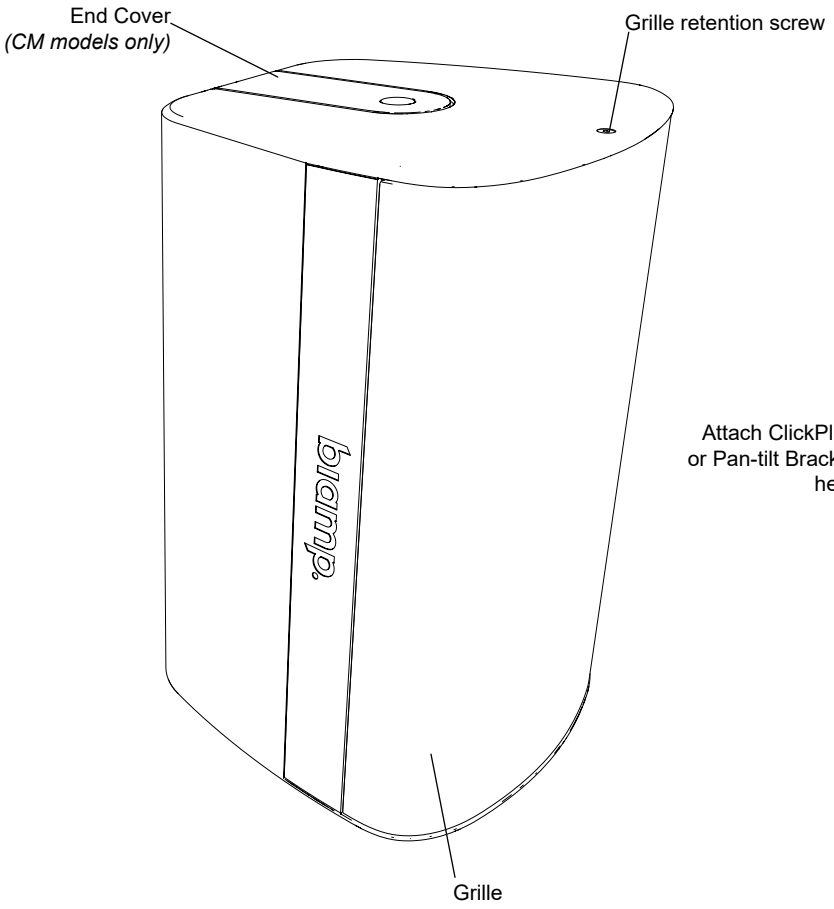

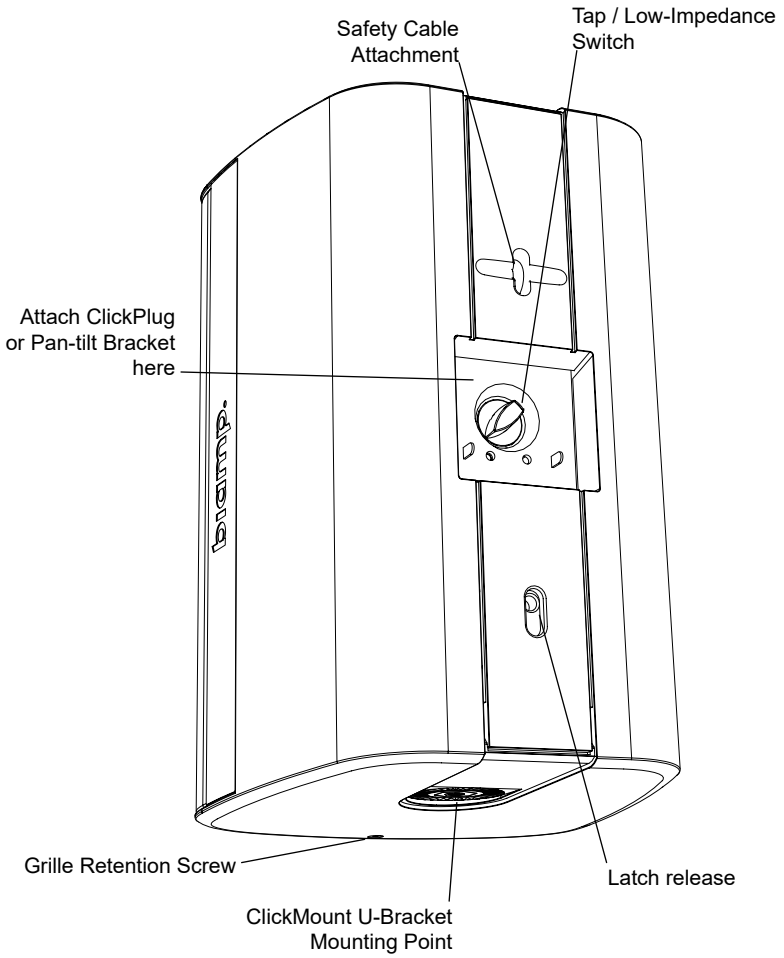

EX-S6 Model shown

Tools Needed

- Hex wrenches: 5mm, 5.5mm (or 7/32"), 6mm
- Small flat screwdriver

RIGGING AND ELECTRICAL SAFETY

IMPORTANT: The loudspeakers described in this manual are designed and intended to be mounted to differing building surfaces using a variety of rigging hardware, means and methods. Installation of loudspeakers should only be performed by trained and qualified personnel. All electrical connections must conform to applicable city, county, state, and national (NEC) electrical codes.

DANGER: It is possible to experience severe electrical shock from a power amplifier. Always make sure that all power amplifiers are in the "OFF" position and unplugged from an AC Mains supply before performing electrical work.

IMPORTANT: Refer to the sections on installation and connections later in this manual for additional information on rigging and electrical safety.

IMPORTANT: When installing loudspeakers outdoors, use a support system with enough wind-load strength to comply with applicable codes and standards.

IMPORTANT: Please review the safety guide accompanying this product and these installation instructions prior to to installing this loudspeaker.

CAUTION: Installation of Biamp loudspeakers should only be performed by trained and qualified personnel. It is strongly recommended that a licensed and certified professional structural engineer approve the mounting. Severe injury and/or loss of life may occur if this product is improperly installed.

DANGER: It is advised that a safety cable be secured to a suitable load-bearing point separate from the primary loudspeaker mounting point, with as little slack as possible so as not to develop undue kinetic force if the primary mount were to fail.

ENVIRONMENTAL:
1) This device is not intended for water immersion in applications requiring UL1480A Certification.
2) This device is not intended for direct exposure to sunlight in applications requiring UL1480A Certification.

INSTALLATION

The loudspeaker can be mounted to a variety of surfaces, but must be mounted to structural load bearing surfaces or substrates (not electrical gang boxes). There are two mounting options provided for the Desono EX family of loudspeakers: a ClickMount pan-tilt bracket and an indexing U-Bracket with included waterproof ClickPlug wiring insert. Wiring can be run to the mounting locations for each of the mounting options. When installing EX models outdoors, do not aim them upwards. Doing so will void the warranty and reduce the life of the loudspeaker.

Install the ClickMount Pan-tilt Bracket

The mounting points on the EX ClickMount bracket backplate are centered on the top, bottom and sides to accommodate direct mounting to wall studs and/or structural cross-members. They are sized to accommodate bolts up to 6 mm (1/4"), in order to provide a high safety factor when mounted. The bracket must be oriented with the arrow pointing UP.

1. Route the wire through the channel in the wall bracket and out the hole in the base (Figure 1), and attach the wall plate to the mounting surface (attachment hardware is not included). There is a small level in the lower left corner to ensure the bracket is straight. *Do NOT install the cover plate yet* - wait until the loudspeaker is ready for installation. Pull enough wire through so that the bracket arm can be fully tilted or panned.
2. Strip the insulation 0.5" (13 mm) from the end of each wire. Lift a lever up and insert the wire fully into the tool-less wiring terminal (polarity is noted above the terminals). Press the lever back down on the wire to secure the connection. (Figure 2) Ensure the lever is fully snapped down and each wire is tight and can't be pulled out. Stranded wire should be twisted or crimp-on wire ferrules used to ensure all strands are captured.

NOTE: The levers are stiff - take care when lifting or pressing them down.

IMPORTANT: If the wall surface is to be finished after the brackets are installed, mask off the bracket and especially the ClickMount arm and wiring terminals to prevent any paint or dust from getting into the aiming mechanism or interfering with the wiring connectivity. Use low-adhesive painter's tape.

3. Once the wall is finished, the cover plate can be installed. Remove either knockout if needed for the wiring. Rotate the cover over the bracket arm and snap into place (Figure 3). A small screwdriver inserted in the center bottom edge of the plate depressing that tab will allow removal.

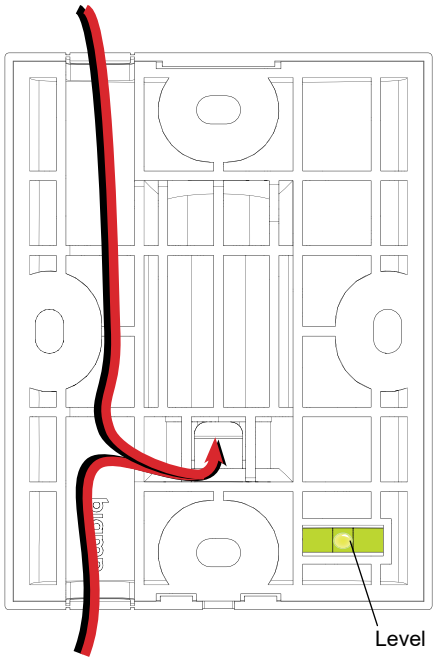

Figure 1. Wire routes through the rear of the ClickMount Pan-tilt Bracket

Lever-actuated (tool-less) wiring terminals will accommodate up to a 6 mm² (10 ga) conductor.

The bracket will accept up to 8 mm (0.3") diameter cable. The opening to the pan-tilt mechanism is 8 x 12 mm (0.3" x 0.47").

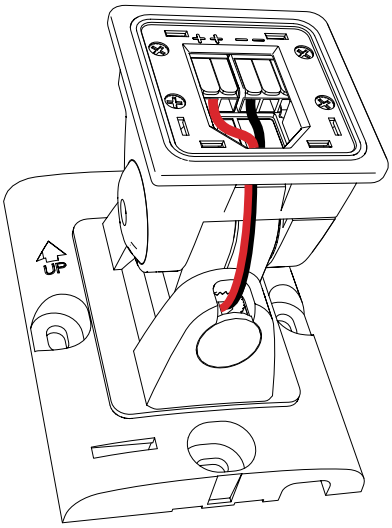

Figure 2. Wire path to wire the ClickMount Bracket (single wire shown)

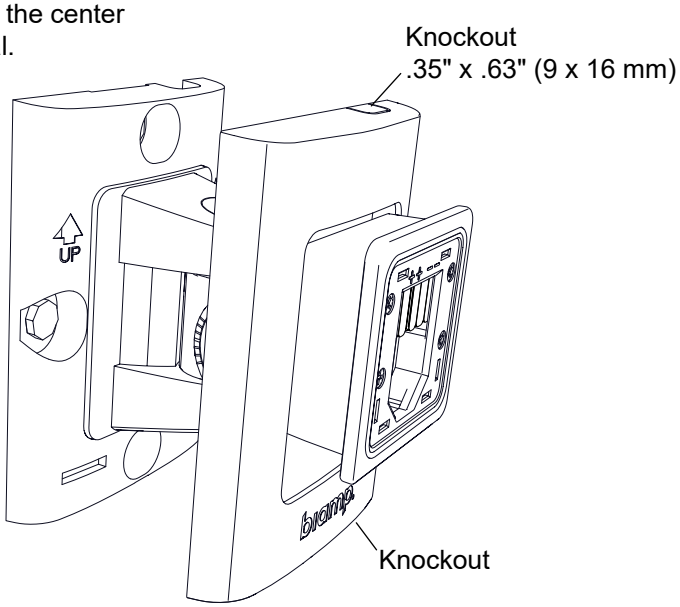

Figure 3. Before loudspeaker is attached fit the cover plate on the bracket and press into place

Installation - ClickMount Pan-tilt Bracket (continued)

Adjust the Tap Switch

4. The tap switch should be adjusted before you attach the speaker to the bracket. Rotate the switch to the desired setting (Figure 4).

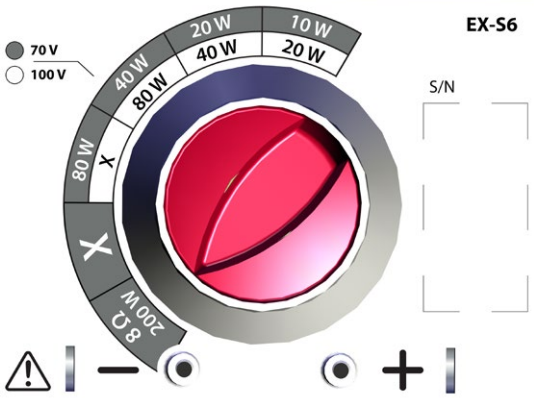

Figure 4. Rotate tap switch

Attach the loudspeaker to the bracket

NOTES: If you know the desired aiming angle of the loudspeaker, the ClickMount bracket can be adjusted before attaching the loudspeaker. Refer to aiming instructions on the next page.

5. Mount the loudspeaker to the bracket by clicking the loudspeaker onto the ClickMount pan-tilt bracket. The loudspeaker fits on the bracket top first, then can be rotated in to engage the latch. The loudspeaker may be installed in vertical or horizontal orientation. See Aiming Angle information on pages 7-9.
   NOTE: It will not install upside down in a vertical orientation.

> **WARNING:** Fully support the loudspeaker until it is clicked in place. The weight of the loudspeaker will pull / angle the ClickMount arm down if it isn't tight.

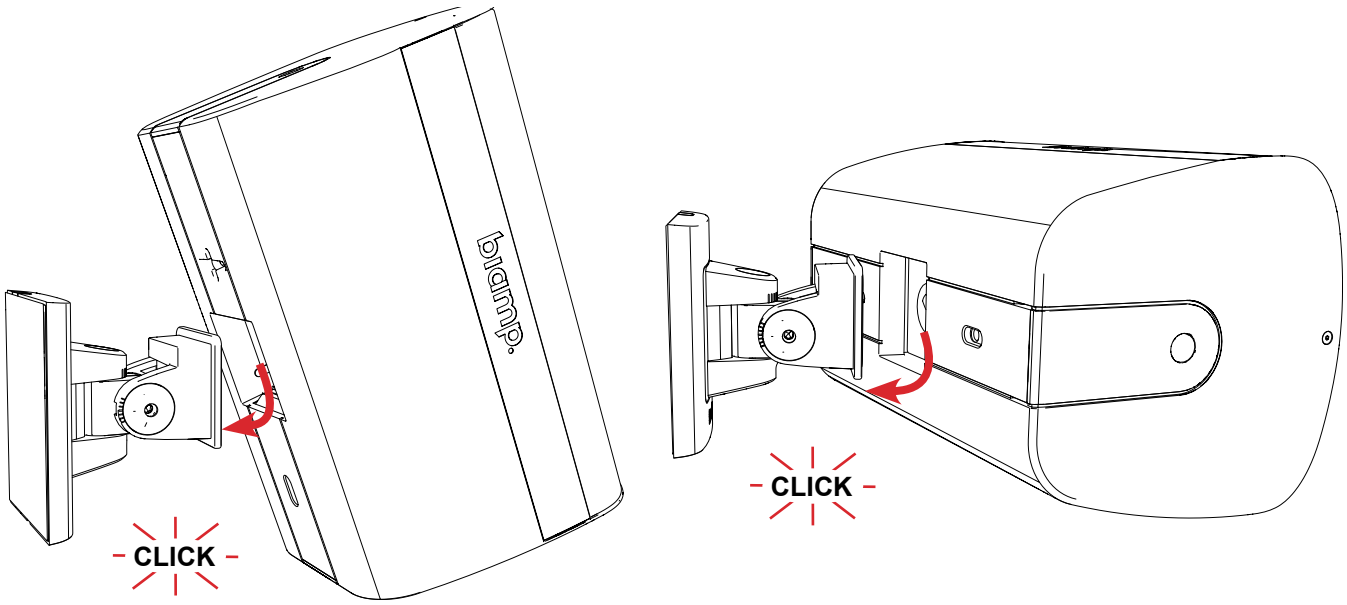

Figure 5. Rotate and press the loudspeakers on the ClickMount bracket

6. Secure the loudspeaker with a safety cable attached to the loop on the rear. The cable should be mounted to a secondary mounting point close to the bracket to avoid any kinetic force if the wall mount should fail, or the latch be released without the loudspeaker being supported. The cable should be a little slack to accommodate the aiming angle.

NOTE: The installer is responsible for sourcing the proper safety cable to meet all applicable local building codes and standards.

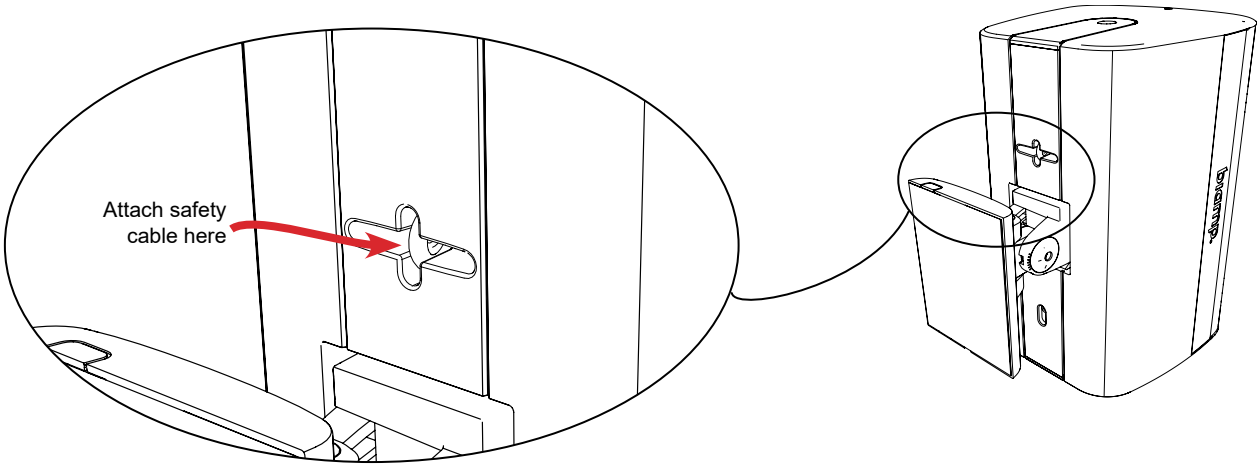

Figure 6. Attach safety cable

Aim the loudspeaker

7. Insert a 5mm hex wrench into the bracket as shown (Figure 7) and loosen. The adjustment mechanism can be accessed from either side of the bracket.

   IMPORTANT: Support the loudspeaker while manipulating the bracket's pan and tilt, because the weight of the loudspeaker will pull it down.

8. As the bracket is loosened, it will first move vertically and then horizontally as it is fully loosened. The bracket will move in indexed predetermined angles (see illustrations on the next page for aiming angle definitions). Fully loosen the bracket, pan it to reach the desired side angle, tighten the bracket slightly and set the vertical angle.
9. Fully tighten the bracket with the hex wrench from the same side that it was loosened. Do **not** overtighten.

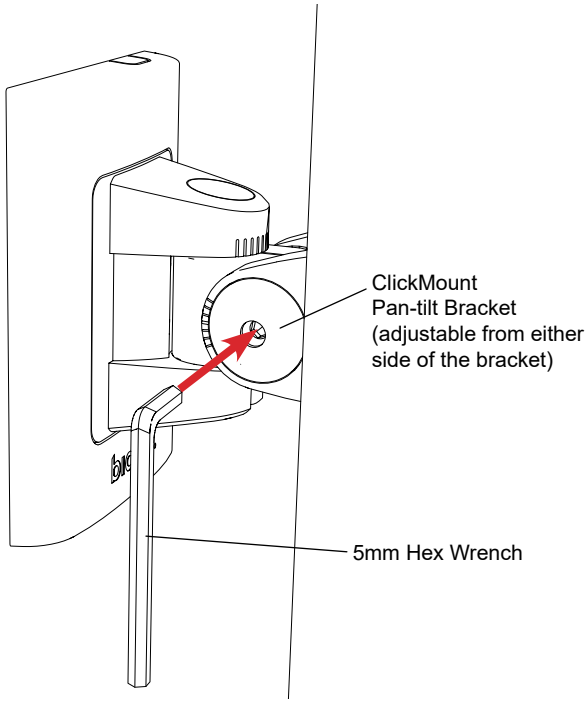

Figure 7. Insert and turn hex wrench to loosen or tighten the bracket to adjust the aiming angle

To remove loudspeaker from the bracket

The loudspeaker can be removed from the ClickMount pan-tilt bracket as follows:

1. Insert a 5mm hex wrench into the hole within the slot in the middle of the label on the rear panel (Figure 8a).
2. Pull down (or toward the base) and the latch will release and remain in the "unlocked" position until the speaker is removed from the bracket. The loudspeaker must be fully supported as you release the latch. See Warning at right.
3. Rotate the bottom of the speaker away from the ClickMount Bracket.

WARNING: When you release the clickmount latch - the loudspeaker **will fall** off the ClickMount bracket! Fully support the cabinet while releasing the latch. This is especially important with horizontally-mounted EX loudspeakers! The safety cable should be in place to take the strain but the loudspeaker will be dangling.

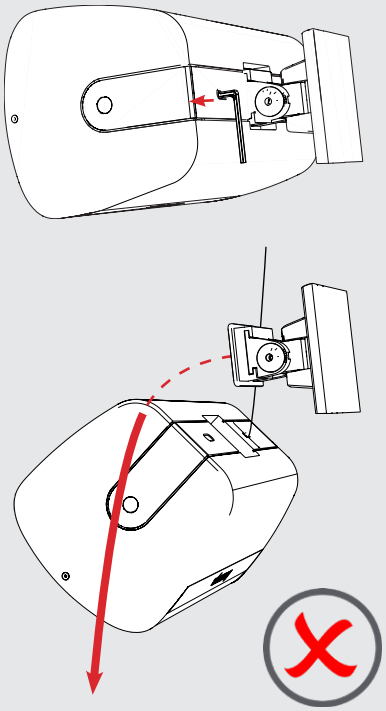

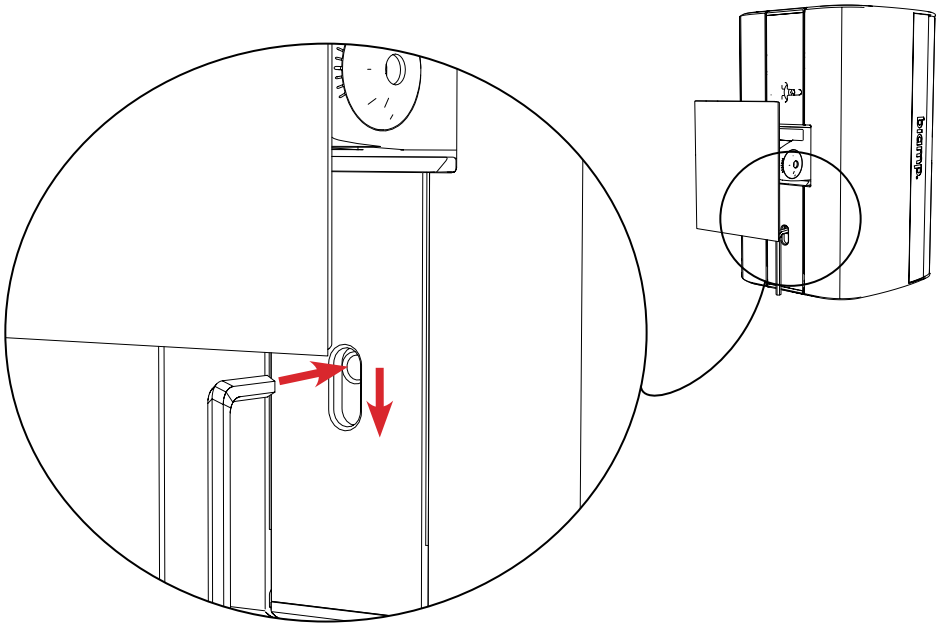

Figure 8a. Insert hex wrench into hole and pull down to release latch

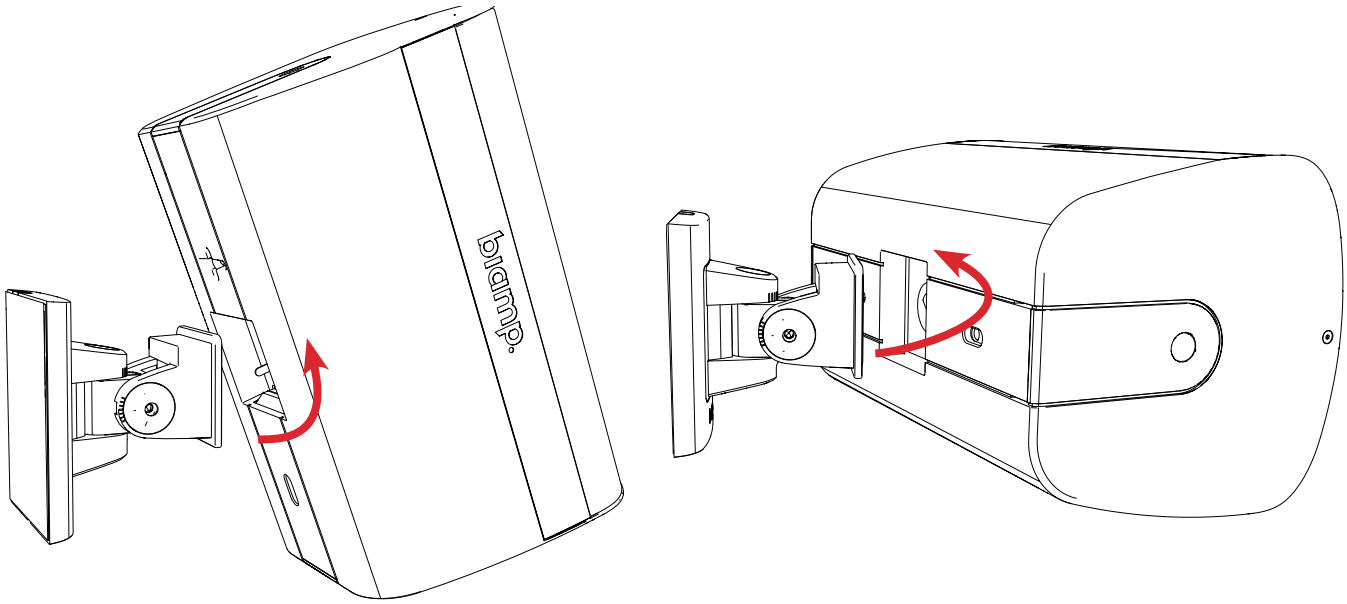

Figure 8b. Lift and rotate bottom of speaker away from the ClickMount bracket.

ClickMount Pan-tilt Aiming Angles (Small Bracket EX-S6)

Portrait [Vertical] Orientation

Top View

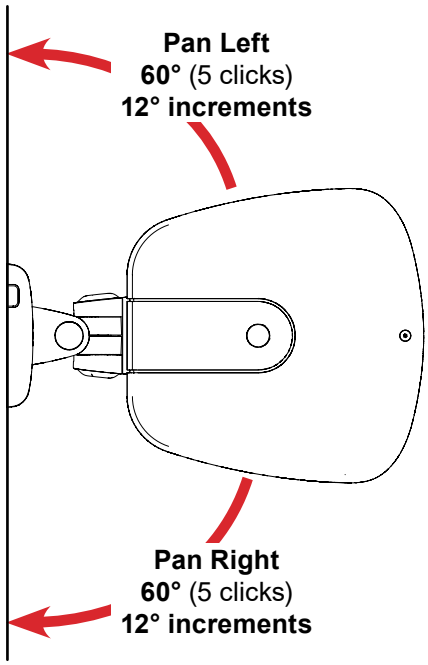

Side View

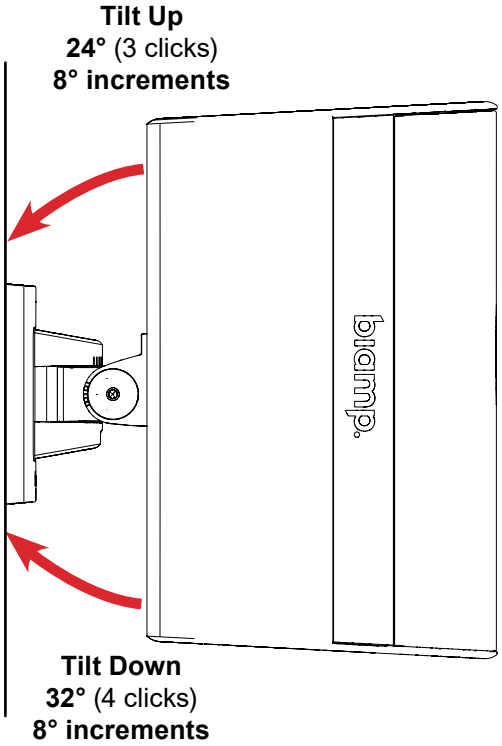

Landscape [Horizontal] Orientation

Top View

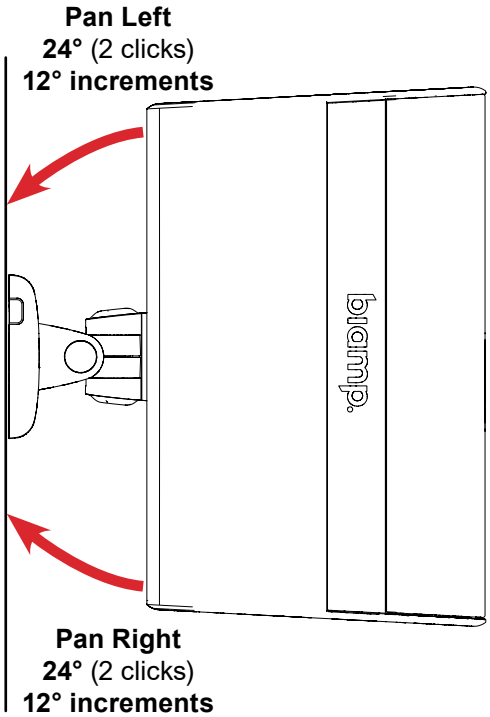

Side View

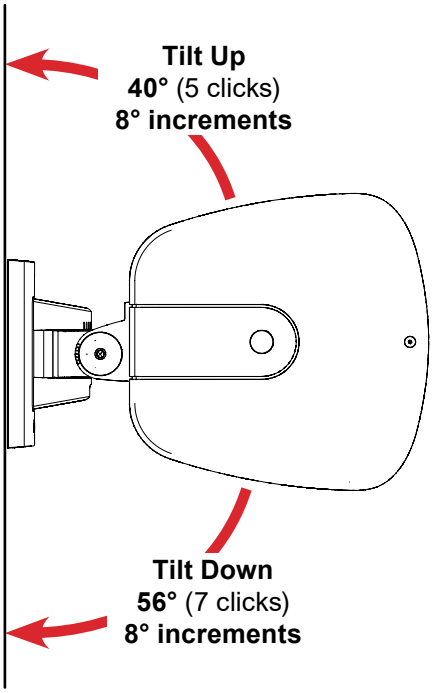

ClickMount Pan-tilt Aiming angles (Large Bracket EX-S8)

Portrait [Vertical] Orientation

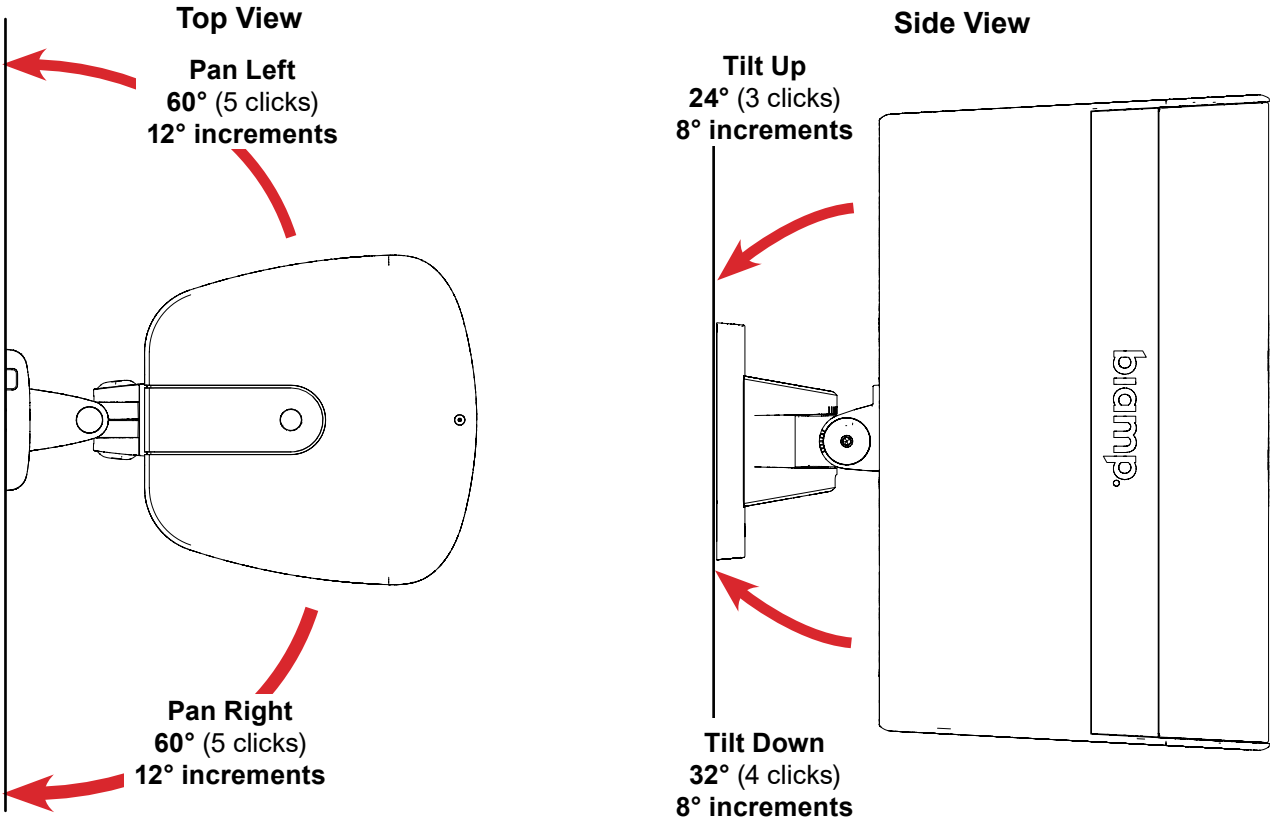

Landscape [Horizontal] Orientation

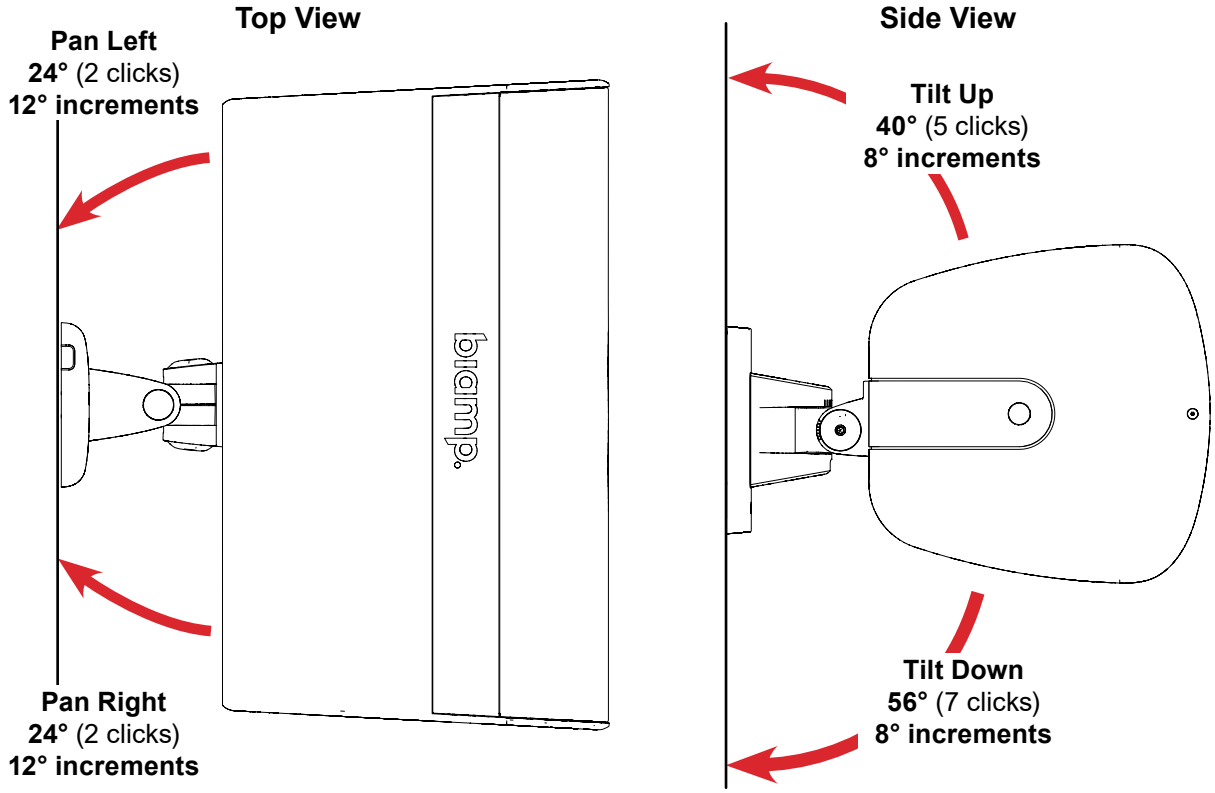

ClickMount Pan-tilt Aiming angles (Large Bracket EX-S10, EX-S10SUB)

Portrait [Vertical] Orientation

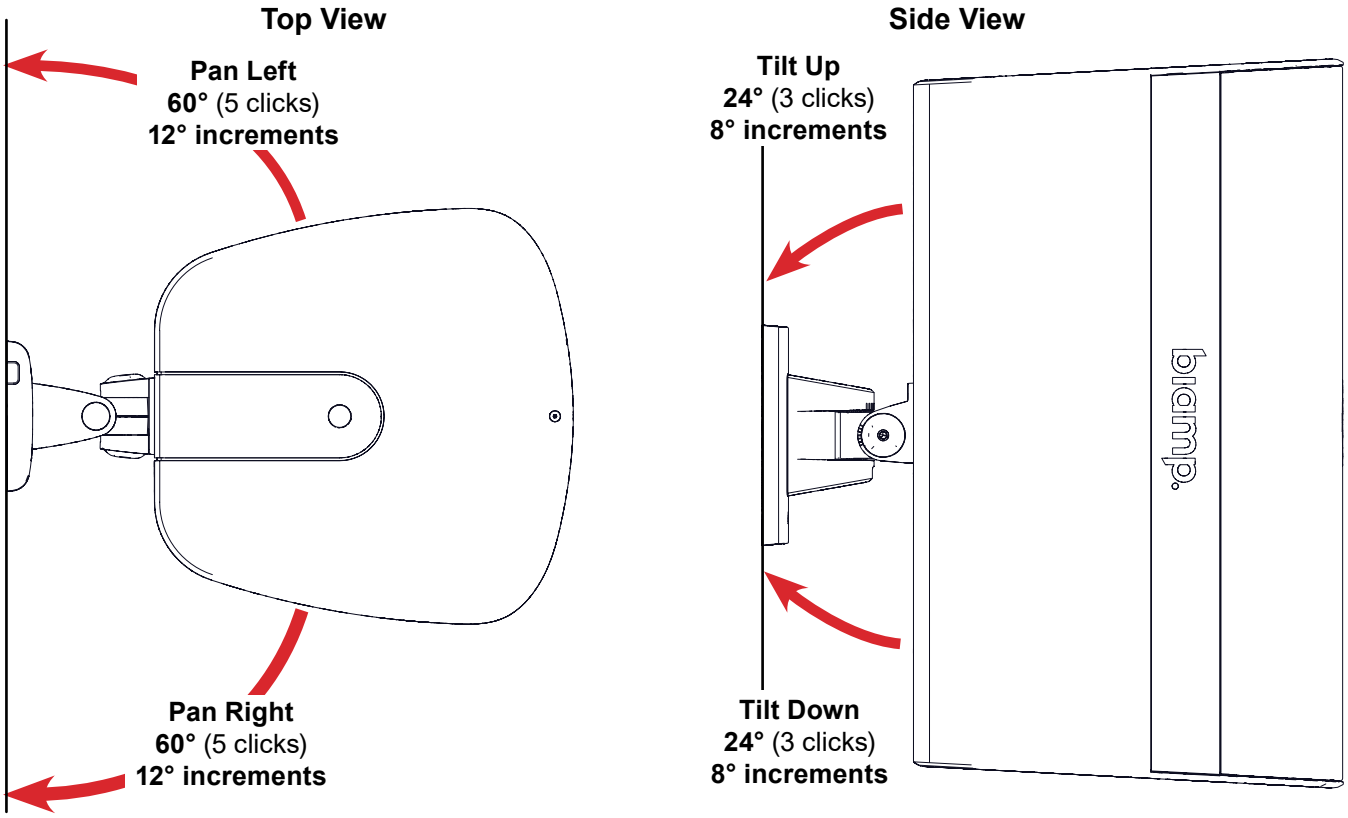

Landscape [Horizontal] Orientation

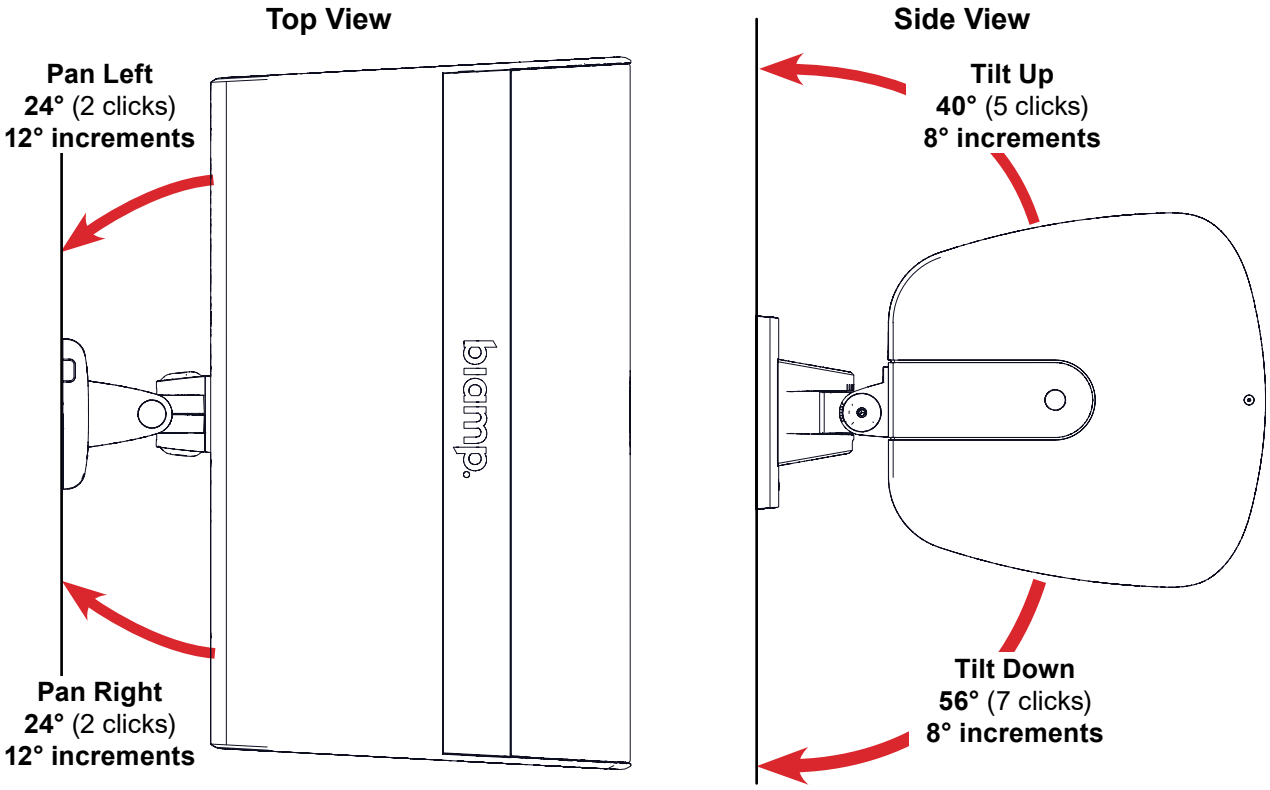

Installation - U-Bracket

The U-Bracket is a low profile powder-coated Marine Grade aluminum design that allows the unit to be connected to a center suspension post or against the wall, ceiling or other flat surface. It can also be mounted to a variety of third party stand and pole adapters.

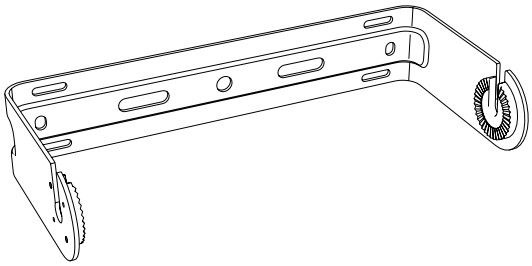

1. Mount U-Bracket to wall prior to loudspeaker installation - the wiring can be routed along the channel and out any of the interior holes not used for mounting the U-Bracket. If mounting in a horizontal orientation on a wall, the slots should face up - see image at right.
2. Sufficient cable should be pulled through the bracket holes to create a drip loop (damp/wet applications) with enough extra to connect to the ClickPlug. If the wall is to be finished before the loudspeaker is mounted, the U-Bracket and cable should be masked with painter's tape or other masking material.

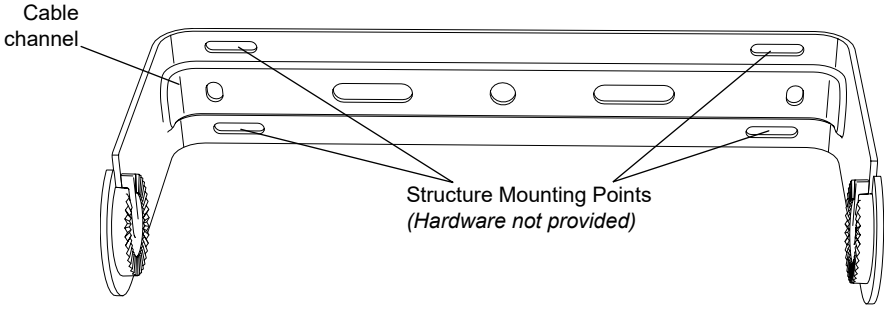

Cable / Wire Size

ClickPlug Cable gland nut will accept a 4-8mm (0.15-.3 in) diameter cable or 2 pairs 1.5mm² (16 ga) or 1 pair 2.5mm² (14 ga). For outside or moisture-rich environments - round SJOW cable or equivalent is advised to provide a weather-resistant seal in the tightened gland nut. Forming the cable into a drip loop will also prevent any moisture migrating into the gland nut.

Tools Needed

- 5.5mm (or 7/32") Hex wrench

3. Wire ClickPlug as shown (Figures 9a, 9b) leaving enough for the likely mounting angle and a drip loop for damp/wet applications. Do before mounting the loudspeaker.

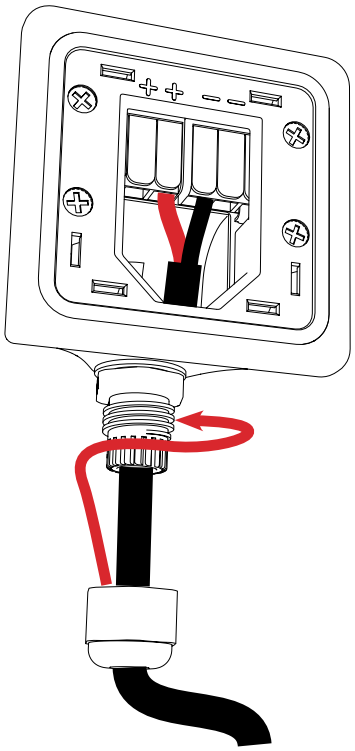

Figure 9a. Thread cable through gland nut and barrel into ClickPlug *(2 conductor cable shown)*

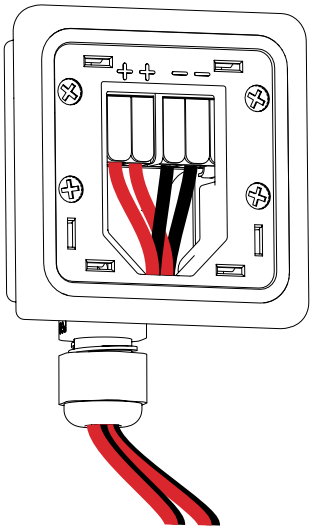

Figure 9b. ClickPlug wired with 2 pairs for daisy-chained applications

Attach the Loudspeaker to the U-Bracket

4. The loudspeaker must be mounted in a specific way to allow the ClickMount teeth on the U-Bracket to guide the speaker perfectly into place using the shallow channels on each end of the speaker. (Figure 10). The grille must face directly away from the slots in the bracket - See below (1) for both loudspeaker mounting positions. Partially screw the knobs on the loudspeaker (leaving 16mm [0.63"]) and fully fit the loudspeaker in the bracket slots.
5. Tighten the knobs loosely by hand (2) so that teeth in the yoke ends engage with the loudspeaker teeth, but still allow the EX to rotate (with clicks).
6. Set aiming angle (3) and tighten the knobs by hand (4) to prevent any movement. Once angle is final, fully tighten knobs by using a 5.5mm (7/32") hex wrench. The loudspeaker will rotate 200° on the bracket in 10° increments.

IMPORTANT: The cabinet is finished with a light coat of paint. Take care to avoid scratching or marring the finish when sliding the loudspeaker onto the U-Bracket.

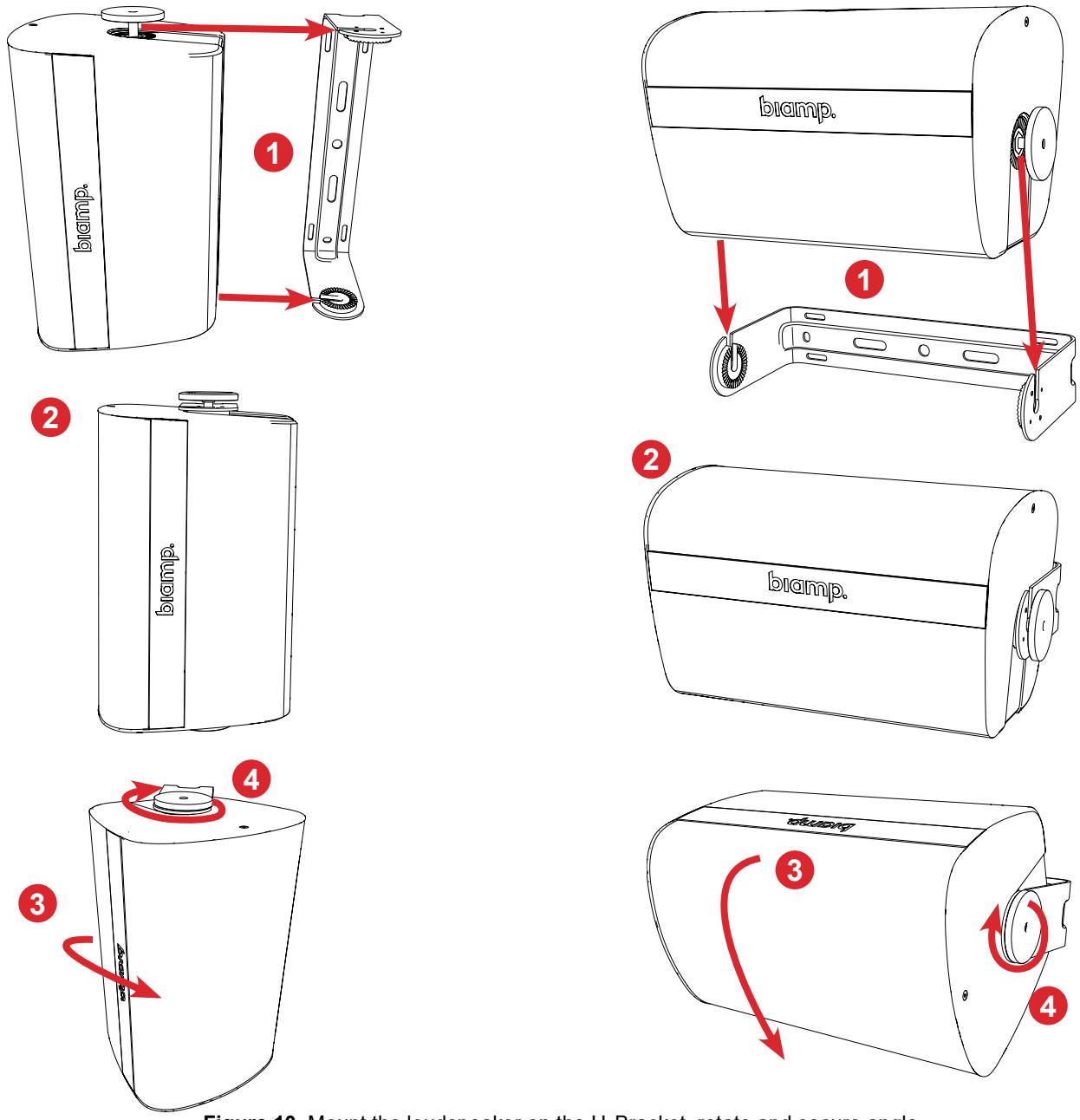

Figure 10. Mount the loudspeaker on the U-Bracket, rotate and secure angle
(Vertical and horizontal orientations shown)

Adjust the Tap Switch

7. The tap switch should be adjusted before you attach the ClickPlug to the loudspeaker. Rotate the switch to the desired setting (Figure 11).

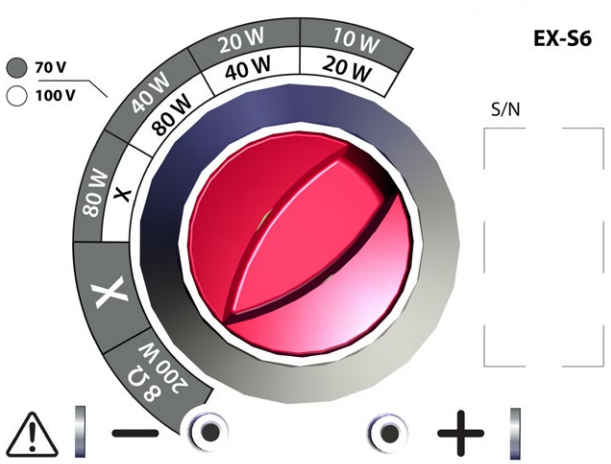

Figure 11. Rotate tap switch

Attach the ClickPlug

8. Insert the wired ClickPlug into the opening with the plug top (or side) into the indent under the safety cable loop first, then "click" it into place by pushing it against the latch (Figure 12) until it is fully seated. The general orientation of the ClickPlug should be with gland nut pointed down (exception noted below). It cannot be mounted with the gland nut pointed toward the safety loop. **IMPORTANT:** The fit is very tight; press on the raised portion of the ClickPlug rather than the gland nut when inserting it.

> **CAUTION:** The ClickPlug fit is very tight and is difficult to remove, especially if it is oriented toward the side of the unit. Avoid attaching the ClickPlug until the speaker is fully installed. If the unit is installed outdoors or in a damp location make sure a cable drip loop is utilized to prevent any moisture from migrating into the gland nut.

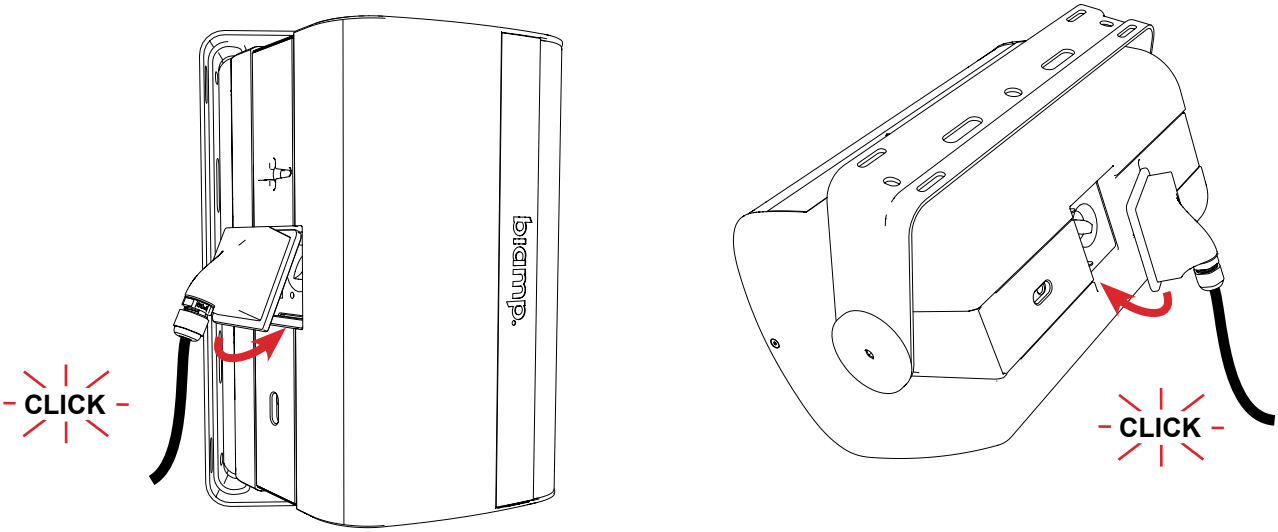

Figure 12. Attach ClickPlug

Installation - U-Bracket (continued)

The ClickPlug should be oriented as shown below. It can not be installed upside-down (Figure 13).

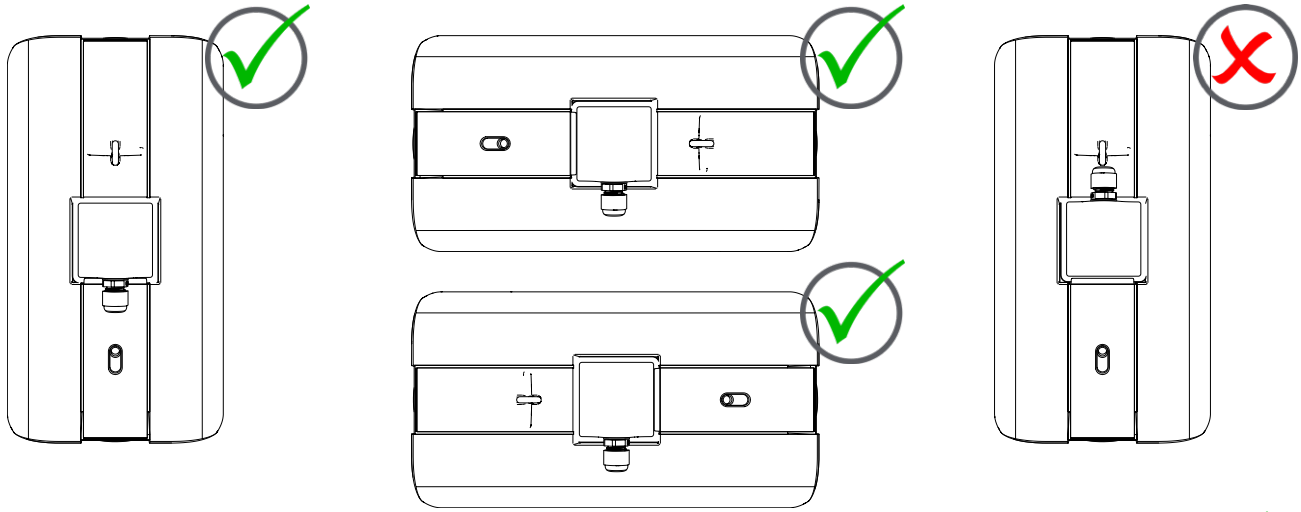

NOTE: At some landscape orientation down angle points, the ClickPlug gland nut and U-Bracket will interfere with each other. In these instances, the ClickPlug needs to be rotated 90 degrees to provide clearance for the U-Bracket rotation. In damp/wet applications you must use a drip loop to prevent the chance of water traveling into the gland nut.

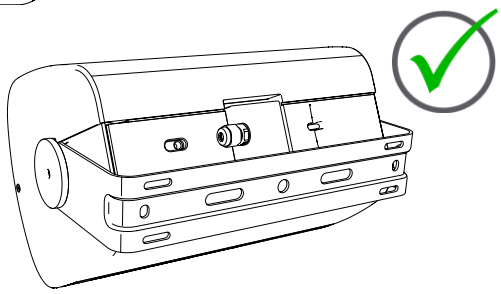

Figure 13. ClickPlug orientation

Attach Safety Cable

9. Secure the loudspeaker with a safety cable attached to the loop on the rear (Figure 14). The cable should be mounted to a secondary mounting point close to the U-Bracket to avoid any kinetic force if the mount should fail.

NOTE: The installer is responsible for sourcing the proper safety cable to meet all applicable local building codes and standards.

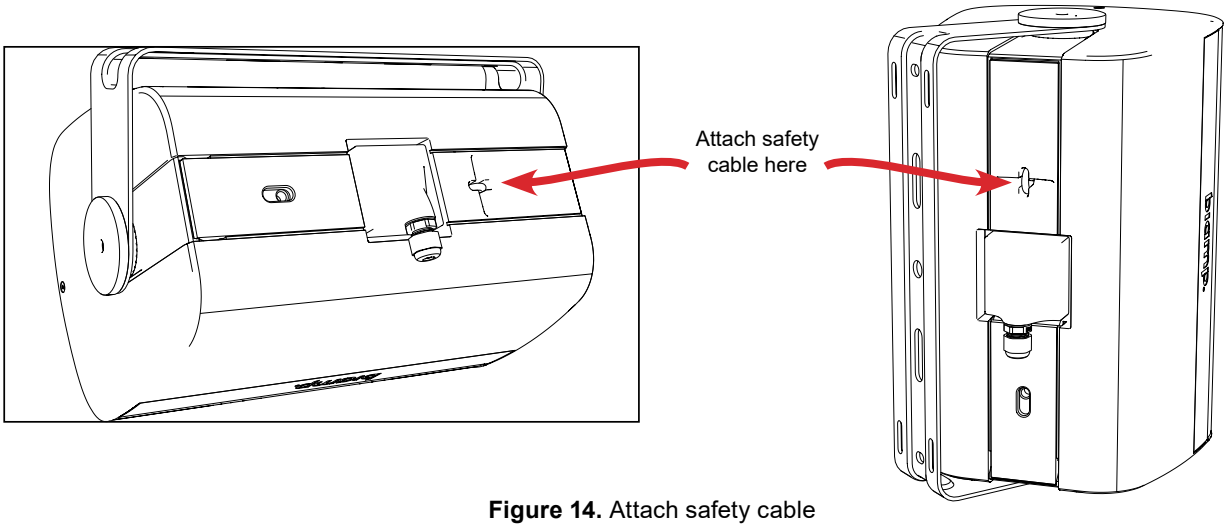

Figure 14. Attach safety cable

Remove ClickPlug from the Loudspeaker

The ClickPlug can be removed from the loudspeaker as follows:

1. Insert a 5mm hex wrench into the hole within the slot in the middle of the label on the rear panel (Figure 12a).
2. Pull down (or toward the base) and the latch will release and remain in the "unlocked" position until the ClickPlug is removed. If the loudspeaker is mounted close to a surface you can loosen the end knobs and rotate the speaker to access the ClickPlug. Take care to note the original position so it can be restored once the ClickPlug is back in place. See Caution at right.
3. The ClickPlug must be pulled away from the latch side first. Do **NOT** use a tool to remove it as you will mar and/or deform the plastic.

CAUTION: The ClickPlug fit is very tight and is difficult to remove, especially if it is oriented toward the side of the unit. Avoid attaching the ClickPlug until the speaker is fully installed. If the unit is installed outdoors or in a damp location make sure a cable drip loop is utilized to prevent any moisture from migrating into the gland nut.

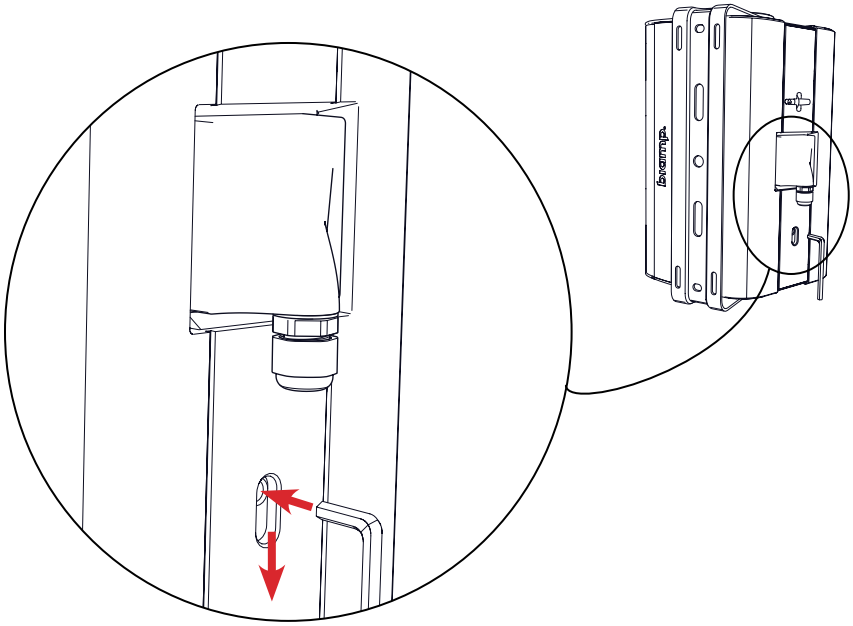

Figure 15a. Insert hex wrench into hole and pull down to release latch

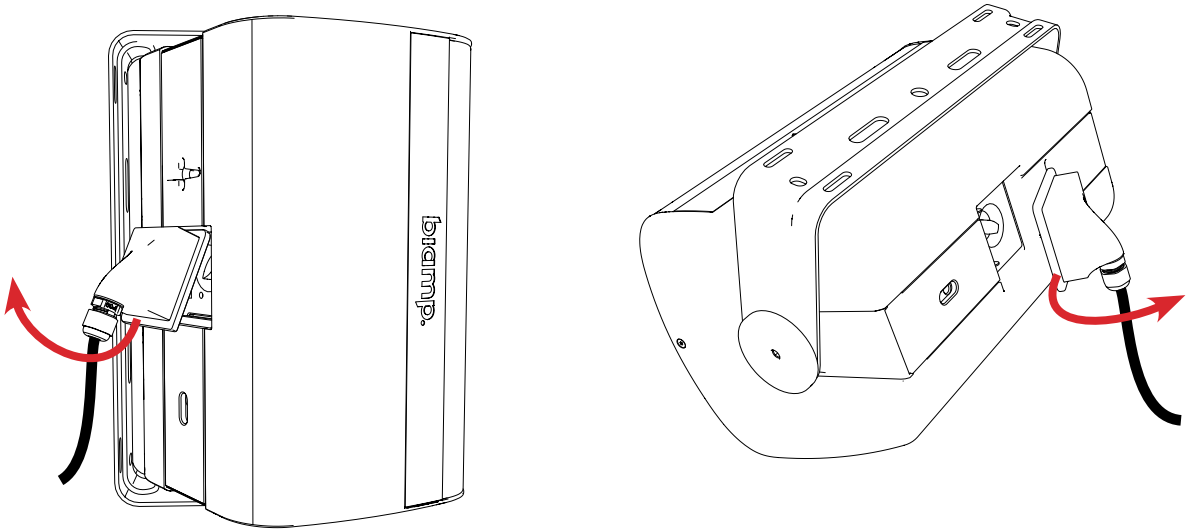

Figure 15b. Pull the ClickPlug away from the latch side. Do **NOT** use a tool to remove it as you will mar and/or deform the plastic.

END CAP COVERS

The end cap covers can be removed if you purchased a unit with a ClickMount pan-tilt bracket and need to change it to a U-Bracket mount with the addition of an accessory UB kit. If you purchased a UB model and need to change to a pan-tilt bracket, the covers can be reattached starting at Step 5

Tools Needed

- Small flat screwdriver
- 6 mm hex wrench

Cover Removal (Figure 16)

1. Insert a small screwdriver under the front end of the circular cap. Pry up and remove the cap.

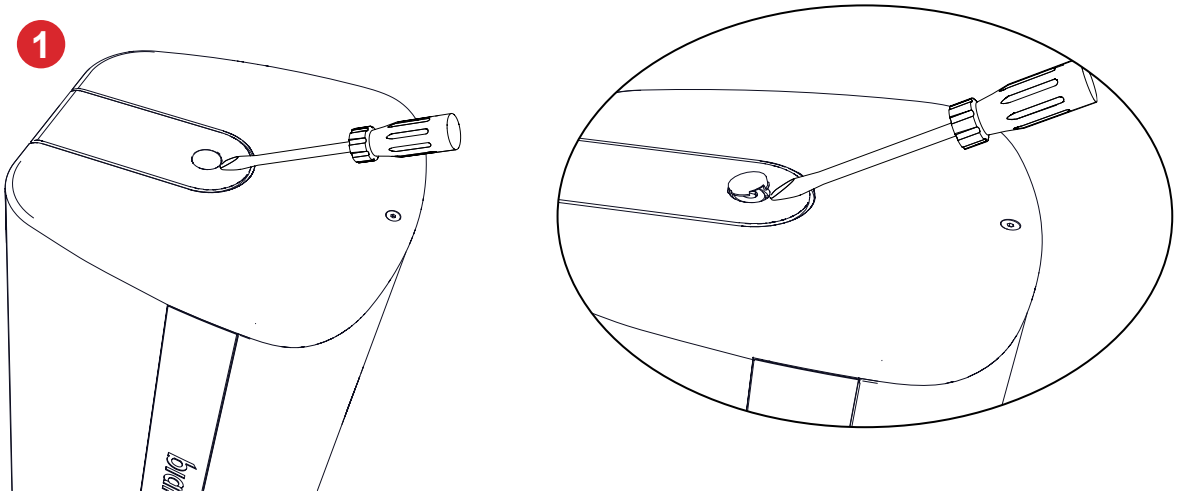

2. Use a 6mm hex wrench to remove the cover retention nut.
3. Use a small screwdriver to lift the front end of the cover.
4. Slide cover off, and repeat for the other cover

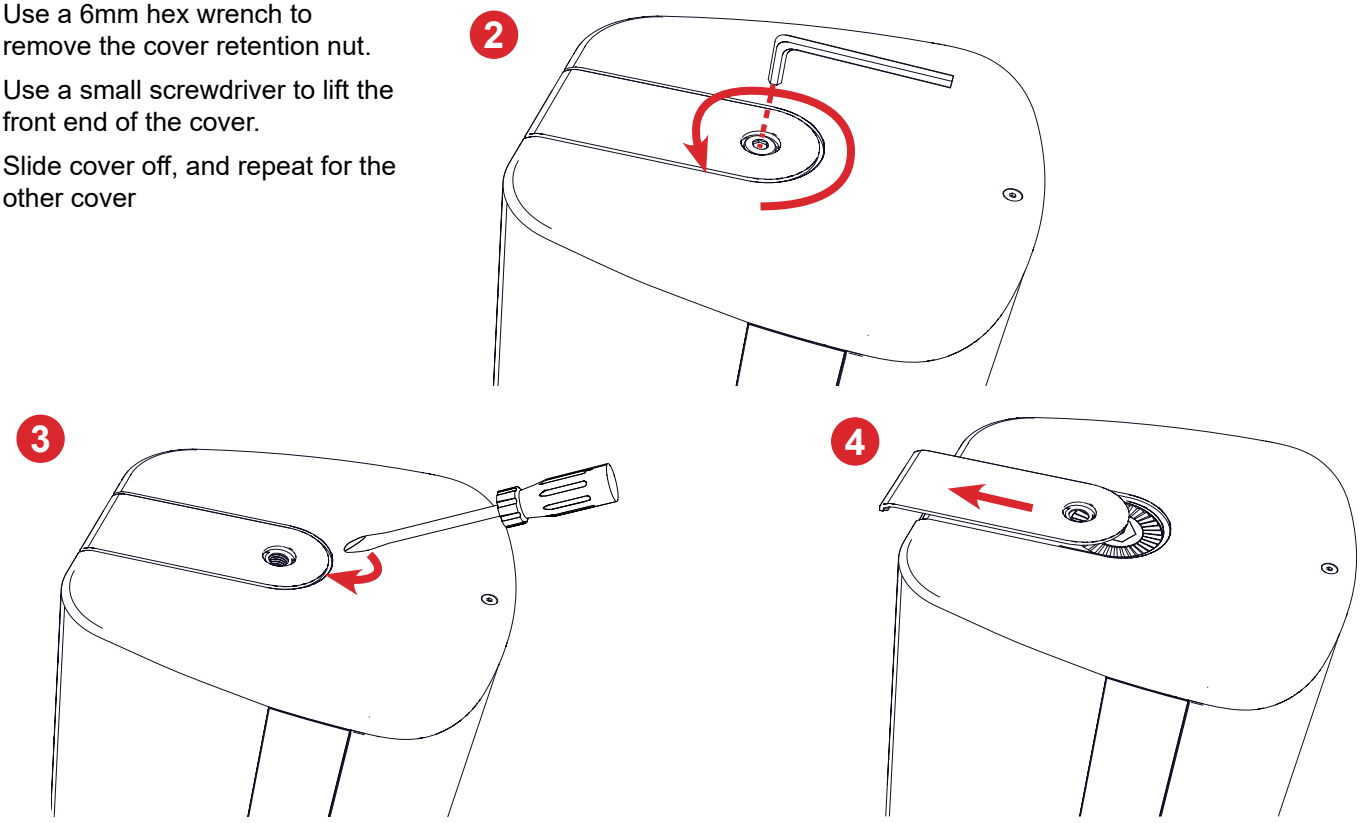

Figure 16. Remove end cap covers

End Cap Covers (continued)

Cover Attachment (Figure 17)

5. Slide cover on and seat over the threaded insert.
6. Screw on the cover retention nut with the 6mm hex wrench.
7. Cover the nut with the small cap - insert the rear tabs first, then push down the front to fully seat.

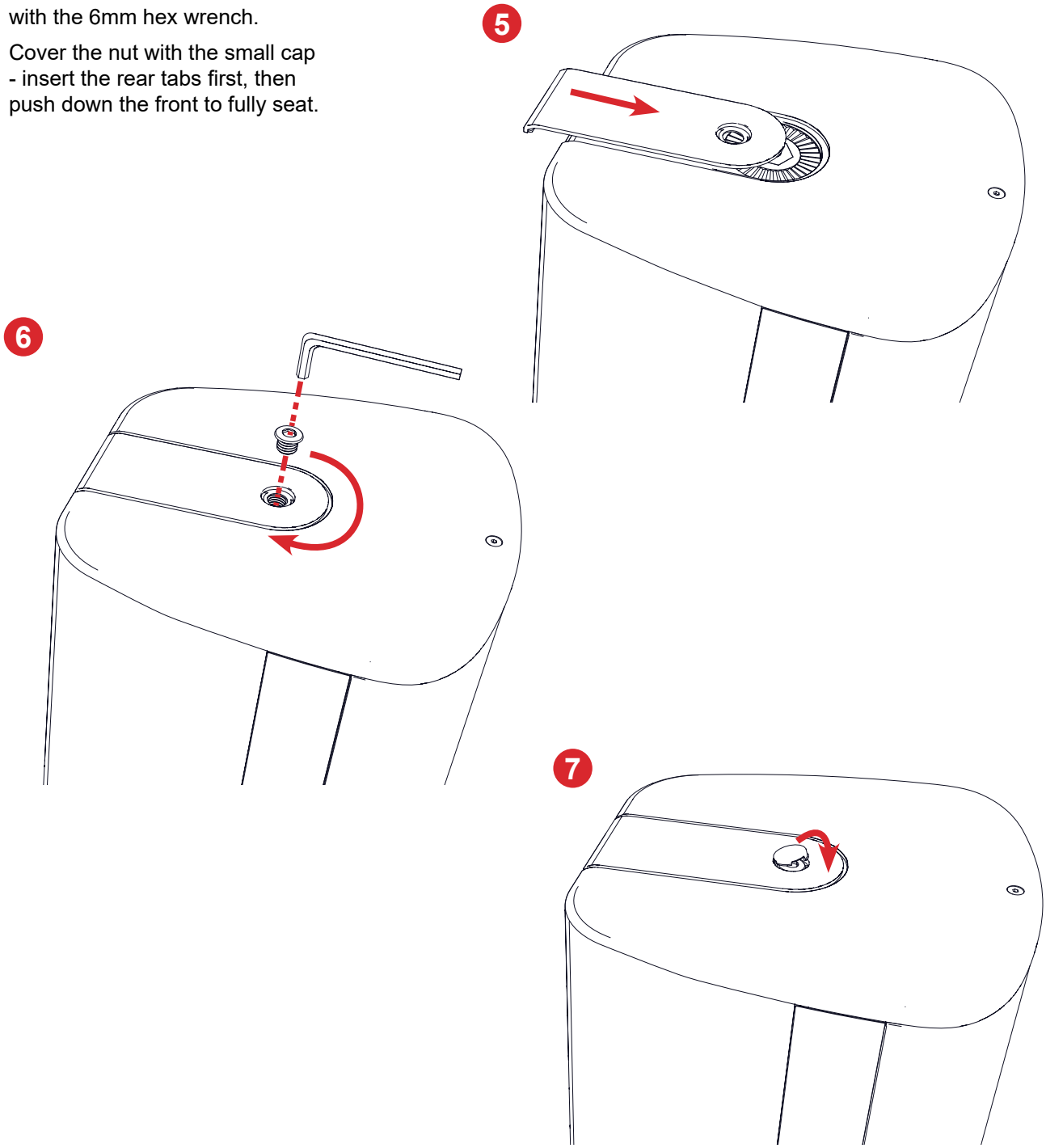

Figure 17. Attach end cap covers

EYEBOLT SUSPENSION *(OPTIONAL)*

EX loudspeakers can be suspended by a single shouldered eyebolt and have the angle adjusted with a secondary cable attached to the safety cable location. (Figure18) This is only applicable for static indoor mounting locations. The UB option must have been ordered for this, since it contains the ClickPlug for wiring.

1. If necessary, remove the U-Bracket from the loudspeaker. Screw the eyebolt into the BOTTOM threaded insert until fully seated. The loudspeaker will hang upside-down to have the secondary cable attachment below the ClickPlug.
2. Wire the ClickPlug per instructions on page 10. Click it into place with the gland nut aiming up (toward the rear safety label). Make sure it is fully seated and the latch is engaged.
3. Suspend loudspeaker using two (2) cables; primary support from the eyebolt and secondary from the back to refine the aiming angle. *Never use the safety point as a primary load-bearing mounting point.*

Tools/Hardware Needed

- Rated M10 Eyebolt shaft length 0.75 (20mm)
- 5 mm hex wrench (latch release)

WARNING: The wiring to the ClickPlug must **NOT** be weightbearing - it will add stress to the latch mechanism and may affect wiring connections to the unit.

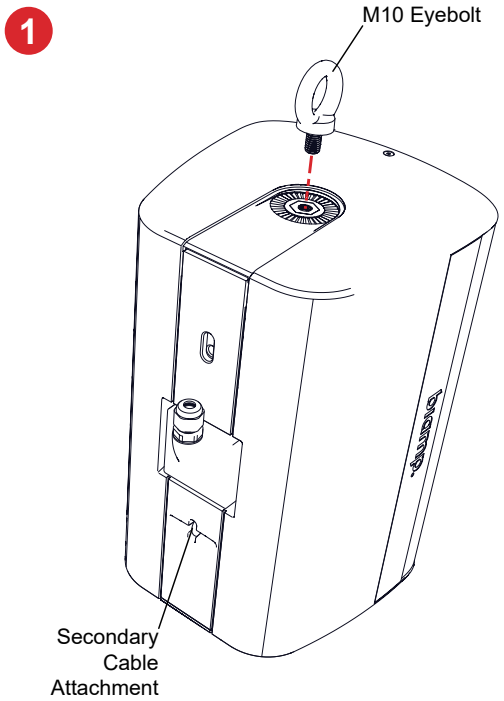

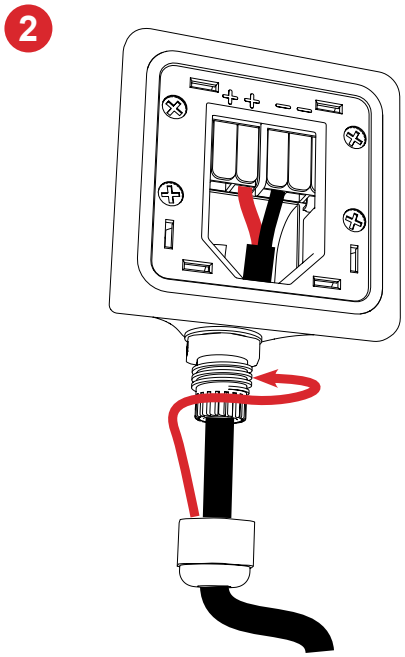

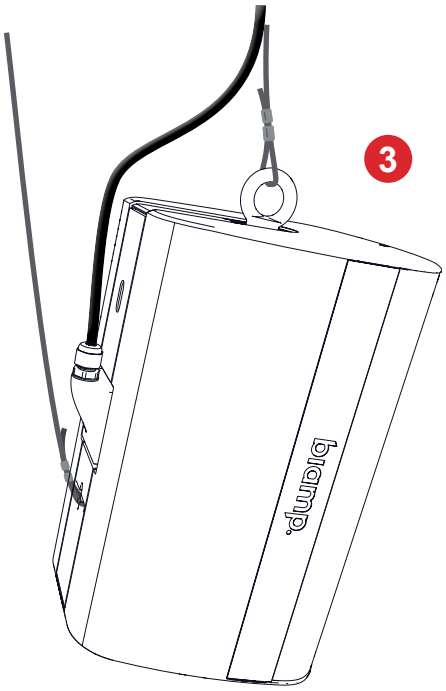

Figure 18. Eyebolt suspension

PAINTING INSTRUCTIONS

The Desono EX cabinets have a light paint coat over the plastic material. They accept almost any type of latex or enamel (oil based) paint. We recommend application of two light coats. If the grille is to be painted, it must be removed to be painted (spray paint only) and then reinstalled.

IMPORTANT: Do not remove the scrim material from the grille. It is treated with a hydrophobic compound to repel moisture.

Process

If the grille will not be painted, fully mask it and proceed to Step 2.

1. Carefully remove the screws at the top and bottom of the cabinet. Pull the grille away from the cabinet. Take care not to bend the tabs or the grille (Figure 19).

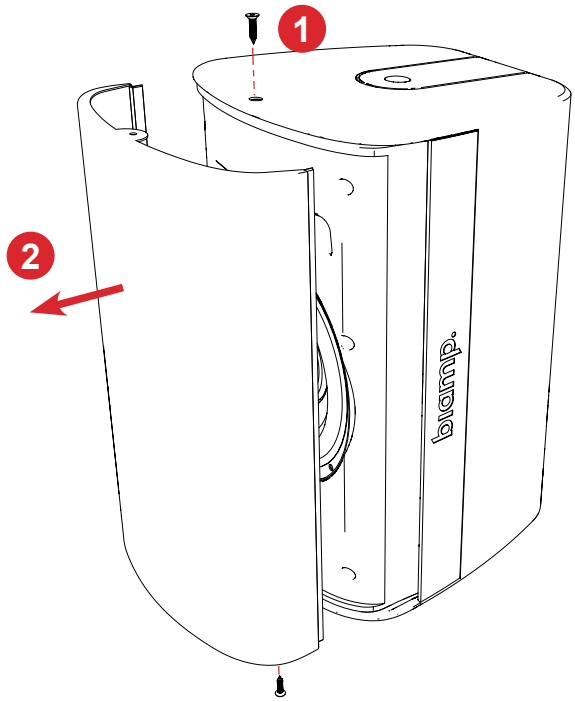

Figure 19. After removing the screws, carefully pry off the grille

CAUTION: NEVER use abrasives, gasoline, kerosene, acetone, methyl ethyl ketone (MEK), paint thinner, harsh detergents or other chemicals on the loudspeaker. These chemicals and agents may permanently damage the finish. Some are also toxic and highly flammable.

IMPORTANT: Take care not to bend or damage the grille on removal or reinstallation.

IMPORTANT: Blocking the grille holes with paint or getting any paint on the drivers or internal parts will affect loudspeaker performance and void the warranty.

IMPORTANT: For applications where UL1480A or EN54-24 certification is required, ensure that relevant information on the rear label is not painted over.

You will need:

- Removable masking tape or painter's tape
- Machinist scribe tool or knife
- Phillips head screwdriver

Useful Tips

Use a sharp knife to trim the masking material close to the edges of the masked areas.

Painting Instructions (continued)

Loudspeaker preparation

2. Fully mask the full (black) loudspeaker face so that all internal components will not receive any paint. Also mask off the rear input panel (area around the tap switch) the retaining latch for the mounts, the rear label and latch access (Figure 20). For UB models, the center mounting holes and teeth on both ends must also be masked. We advise against using conventional masking tape and NEVER use duct tape: these kinds of tape generally leave adhesive residue that can be difficult to remove and that may actually cause damage. Painter's or other low-adhesive tape is best.
3. Clean the grille assembly and the loudspeaker cabinet by rubbing them with a lightly dampened cloth. Do not use abrasives such as sandpaper or steel wool.
4. After cleaning, apply two or more thin coats of either latex or oil-based paints. Latex paint will adhere better if an oil-based primer is used first. Paint is best applied by spraying it on, but the enclosure may be brushed with light coats.
5. To paint the grille, spray paint with 2 light coats – enough to cover grille but NOT clog any of the holes. You can blow air through the back of the grille to ensure that there are no paint particulates on the grille cloth. Let all components dry completely before reassembly.
6. Remove all of the masking materials and reassemble. **IMPORTANT:** The grille must be reinserted as carefully as it was removed - insert the sides into the cabinet with the top and bottom tabs fitting in the channel in the cabinet face. Do not push on the center of the grille as it may deform or not seat properly and adversely affect performance. Re-secure the grille with the screws in the top and bottom of the loudspeaker (Figure 21).

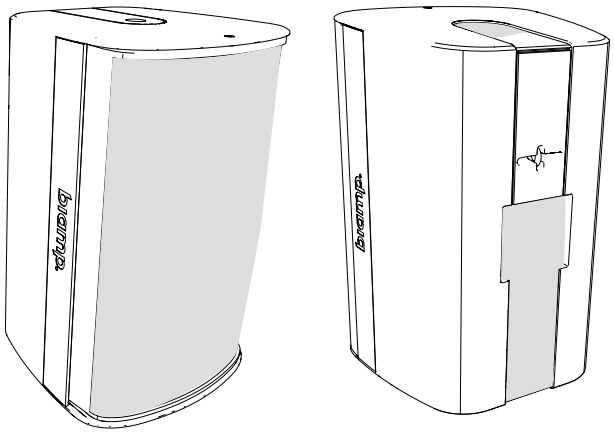

Figure 20. Mask off the full black face, all connection points, input panel, rear label, and latch access

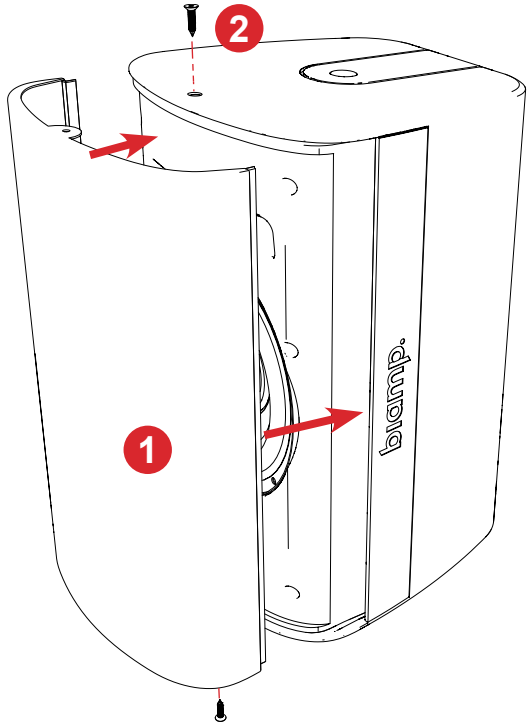

Figure 21. Reassemble the loudspeaker, carefully insert grille tabs and sides into the cabinet then re-install screws.

TECHNICAL DRAWINGS - CLICKMOUNT PAN-TILT BRACKET

CMX-SM

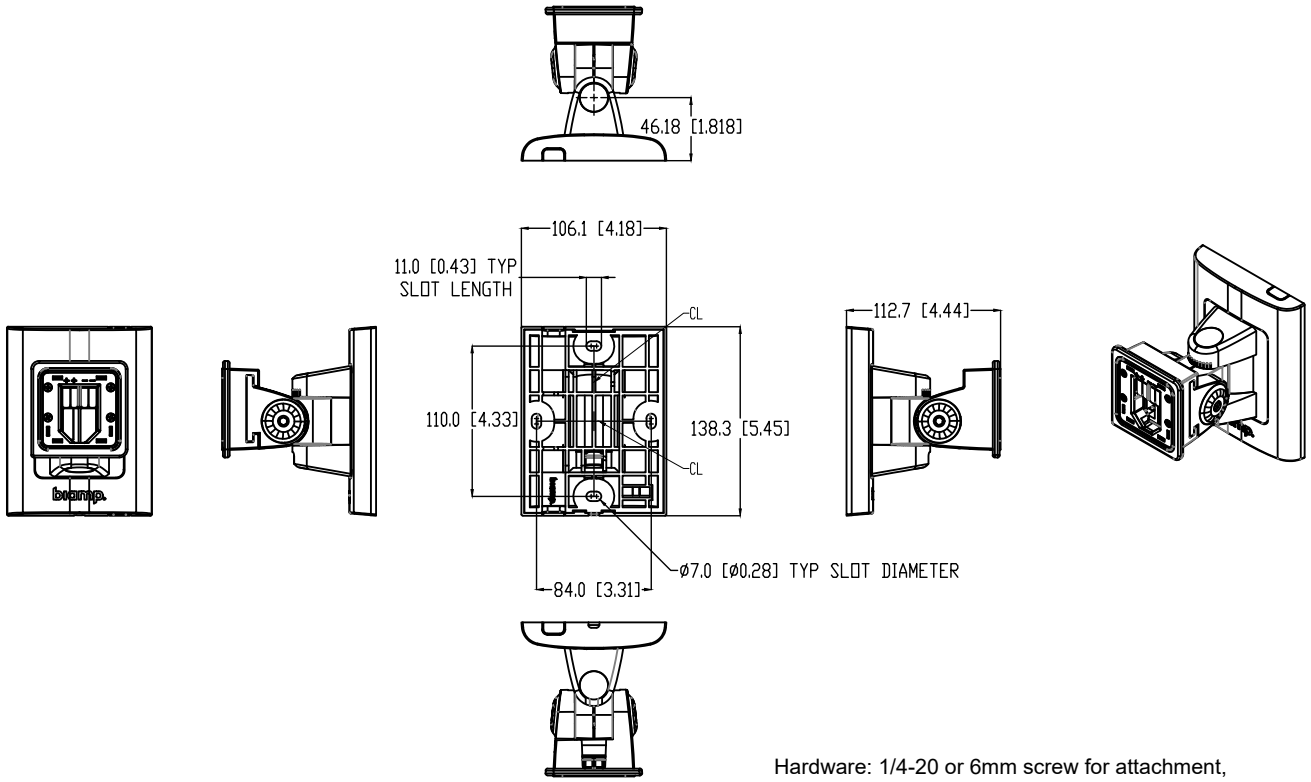

Hardware: 1/4-20 or 6mm screw for attachment,
Backplate will accept typical 1/2" or 13mm socket (18mm OD)

TECHNICAL DRAWINGS - U-BRACKETS

EXUB-S6

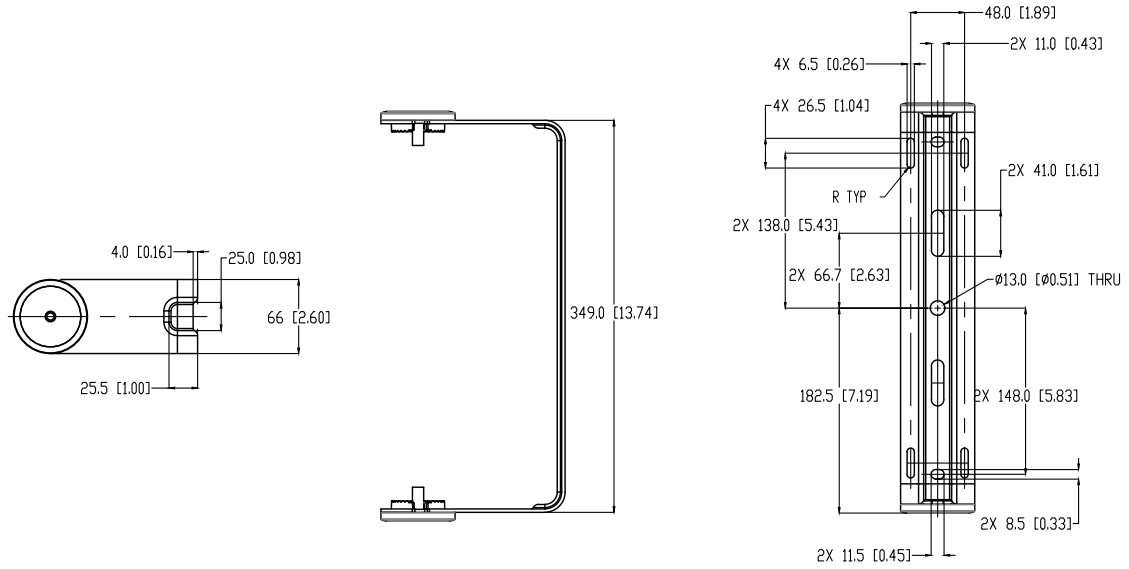

CONTACT US

Email: support@biamp.com

Web: support.biamp.com

Warranty: biamp.com/legal/warranty-information

Safety & Compliance: biamp.com/compliance

Note: *Every effort has been made to ensure that the information contained in this manual was complete and accurate when printed. However, due to ongoing technical advances, changes or modifications may have occurred that are not covered in this manual. The latest version is available here.*

A: 9300 S.W. Gemini Drive Beaverton, OR 97008 USA W: www.biamp.com

30JUN2021