B-TECH AV MOUNTS

BT8583

LARGE FLAT SCREEN TWIN COLUMN FLOOR STAND

INSTALLATION GUIDE

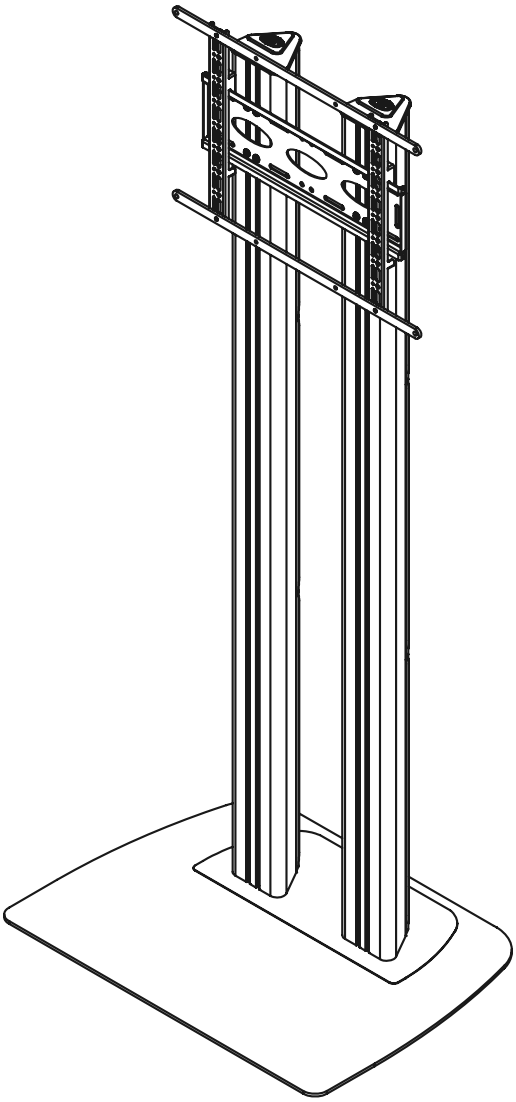

SPECIFICATIONS

- Recommended for screens up to: 70" (177cm)
- Max load: 70kg (154lbs)
- Suitable for screens with VESA® fixings up to 600 x 400mm
- Universal design suitable to mount screens in a landscape or portrait orientation
- Integrated cable management
- Dimensions:
  H.1826 x **W.**800 x **D.**600mm (**H.**71.90" x **W.**31.50" x **D.**23.62")
- Simple 'hook-on' installation with all mounting hardware included

70KG

70" 177CM

VESA 600 x 400

CONTENTS

Installation Safety Notes.....2
Parts List.....4
Installation Instructions.....6
Product Dimensions.....11
B-Tech Contact Details.....12

INSTALLATION SAFETY INSTRUCTIONS

CAUTION: This stand is intended for use only with the maximum weights indicated. Use with equipment heavier than the maximum indicated may result in instability causing possible injury.

Do not attempt to install this product until all instructions and warnings have been read and properly understood.

Please keep these instructions for future reference.

Please check carefully to make sure there are no missing or defective parts - defective parts must never be used.
B-Tech AV Mounts, its distributors and dealers are not liable or responsible for damage or injury caused by improper installation, improper use or failure to observe these safety instructions. In such cases, all guarantees will expire.

General

B-Tech AV Mounts recommends that a professional AV installer or other suitably qualified person install this product.
Great care must always be taken during installation as most AV equipment is of a fragile nature, possibly heavy and easily damaged if dropped.
If you do not fully understand the instructions or are not sure how to install this product safely, then please consult a professional for advice and/or to install this product for you. Failure to mount this product correctly may cause serious injury or death, both during installation and at any time thereafter.
Do not mount any AV equipment that exceeds the specific weight limit of the product you are installing.
This weight limit will be clearly stated on each product and its packaging and will vary from product to product.

Product location

Please pay careful attention to where this product is located. Designed for indoor use, this mount is suitable for public or home installation. Check load capacity of the floor prior to installation as some surfaces are not suitable for installation.
When verifying the stability of the structure, consider the following external factors: The strength of the floor, exposure to sudden and severe wind and danger arising from contact with people and / or objects (eg installations in passageways, emergency exits), if located in a public or frequently populated area ensure that the product is out of the immediate reach of people. When drilling holes it is essential to avoid contact with electrical cables and water or gas pipes contained within.

Fixing hardware

It is highly recommended that all fixing screws be used where supplied and that the purpose of all other fixing hardware is fully understood. In some cases more AV equipment fixing hardware will be supplied to accommodate different models of equipment and set up configurations. The installer must be satisfied that any supplied fixing hardware is suitable for each specific installation.
If any fixing screws or included hardware are deemed not sufficient for a safe installation then please consult a professional or your local hardware store.

Hazard limitation

When routing cables take advantage of any built in cable management features that the product might provide and ensure that all cables are tidy and secure. Check to see that any moving aspect of the product can do so unhindered by any cabling.
Some products have moving parts and the potential to cause injury through the crushing or trapping of fingers or other body parts. Particular attention to the nature of moving parts is required especially when assembling installing and adjusting during set up. Immediately after installation double-check that the work done is safe and secure. Double-check all necessary fixings are present and are of ample tightness.
It is recommended that periodic inspections of the product and its fixing points are made as frequently as possible (no more than 6 months apart) to ensure that safety is maintained.
If in doubt consult a professional AV installer or other suitably qualified person.

CN B-Tech AV Mounts 建议本产品由专业AV安装人员或其他合格人员安装。 B-Tech AV Mounts 及它的代理商、经销商不对由于不恰当的安装而造成的损失或伤害负责。 本产品必须安装在合适的架构上，并仅用于不超过所标示的最大承重。

CS Společnost B-Tech AV Mounts doporučuje provést instalaci tohoto produktu instalátora AV či jinak způsobilé osoby. Společnost B-Tech AV Mounts, její distributoři a prodejci nenesou prostřednictvím odborného odpov ědnost za škody nebo zranění zp ůsobená nevhodnou instalací. Tento výrobek je nutno umístit do vhodné konstrukce a používat jen po uvedenou maximální výšku.

DE B-Tech AV Mounts empfiehlt, dass dieses Produkt durch einen qualifizierten AV-Techniker oder eine andere Person mit geeigneter Qualifikation installiert wird. B-Tech AV Mounts, ihre Distributoren und Händler können nicht für durch fehlerhafte Montage verursachte Beschädigung oder Verletzung haftbar bzw. verantwortlich gemacht werden. Dieses Produkt muss auf eine geeignetem Untergrund montiert werden und darf nur bis zum angegebenen Höchstgewicht verwendet werden.

ES B-Tech AV Mounts recomienda que un instalador de audio y video profesional u otra persona debidamente cualificada instalen este producto. B-Tech AV Mounts, sus distribuidores y concesionarios no se hacen cargo ni se responsabilizan de ningún daño o lesión provocados por una instalación inapropiada. Este producto se debe montar en una estructura adecuada y se debe utilizar soportando solamente hasta el peso máximo indicado.

FR B-Tech AV Mounts recommande de confier l'installation de ce produit à un installateur AV professionnel ou à une autre personne dûment qualifiée. B-Tech AV Mounts, ses distributeurs et ses revendeurs ne sauraient être tenus responsables de tout dégât ou de toute blessure résultant d'une installation incorrecte. Ce produit doit être monté sur un support approprié et utilisé dans la limite du poids maximum indiqué.

IT B-Tech AV Mounts consiglia di affidare l'installazione di questo prodotto a un installatore specializzato o ad altra persona adeguatamente qualificata. B-Tech AV Mounts, i suoi distributori e rivenditori non accettano alcuna responsabilità nei riguardi di eventuali danni o infortuni causati da un'errata installazione. Questo prodotto deve essere fissato a una struttura idonea e utilizzato unicamente sino al peso massimo indicato.

JP B-Tech AV Mounts はAV設置の専門家または適合した知識を備えた人が製品を設置することを推奨します。B-Tech AV Mounts と販売店、取引先はこうした安全指針に従わない場合に随伴される製品の損傷や傷害に対する責任を負いません。場合によって製品が設置されるに適していないところもあるので設置位置に特別な注意を傾けてください。この製品の位置に注意を傾けて設置に適していない壁がいるかを確認してください。指定した重さ制限を超過するAV装備を装着しないでください。

KR B-Tech AV Mounts 는 AV 설치 전문가 또는 적합한 지식을 갖춘 사람이 제품을 설치하도록 권장합니다. B-Tech AV Mounts 와 판매점, 거래처는 이러한 안전 지침을 따르지 않을 경우에 수반될 제품의 손상이나 상해에 대한 책임을 지지 않습니다. 경우에 따라 제품이 설치되기에 적합하지 않은 곳들도 있으므로 설치 위치에 특별한 주의를 기울여 주시기 바랍니다. 제품의 설치 위치에 주의를 기울여 확인하십시오. 지정된 무게 제한을 초과하는 AV 장비를 장착하지 마십시오.

NL B-Tech AV Mounts adviseert om dit product te laten installeren door een professionele AV-installateur of andere hiervoor gekwalificeerde persoon. B-Tech AV Mounts , haar distributeurs en dealers zijn niet aansprakelijk of verantwoordelijk voor schade of letsel die is veroorzaakt door onoordeelkundige installatie. Dit product moet worden gemonteerd aan een geschikte constructie, waarbij het aangegeven maximum gewicht niet mag worden overschreden.

PL Firma B-Tech AV Mounts zaleca, aby ten produkt był instalowany przez profesjonalnych instalatorów AV lub inny odpowiednio przeszkolony personel. Firma B-Tech AV Mounts, jej dystrybutorzy i dealerzy nie ponoszą odpowiedzialności za uszkodzenia lub obrażenia ciała powstałe w wyniku nieprawidowej instalacji. Niniejszy produkt musi być amontowany na odpowiedniej powierzchni, a podczas użytkowania nie wolno przekraczać podanego maksymalnego obciążenia.

PT A B-Tech AV Mounts recomenda que a instalação deste produto seja efectuada por um instalador de AV instalador de AV profissional ou outra pessoa devidamente habilitada. A B-Tech AV Mounts e os seus distribuidores e concessionários não são responsáveis por danos ou lesões causados por uma instalação incorrecta. Este produto tem de ser montado numa estrutura adequada e utilizado somente até ao peso máximo indicado.

RU Компания B-Tech AV Mounts рекомендует, чтобы установка данного изделия производилась инженером по установке аудтио-видеотехники или другим специалистом с соответствующей квалификацией. Компания B-Tech AV Mounts ее дистрибьюторы и дилеры не несут ответственности за повреждения или травмы, полученные в результате неправильной установки.

توصي بي- تك للتجارة الدولية المحدودة بأن شخص محترف فى تركيب ال AV او شخص مؤهل تأهيلا مناسبا لتركيب هذا المنتج. بي- تك للتجارة الدولية، موزعيها والتجار ليست عرضة أو مسؤولة عن الأضرار أو الإصابات الناجمة عن تركيب غير سليم، والاستخدام غير السليم أو عدم مراعاة هذه التعليمات للسلامة. يجب أن يتم تركيب هذا المنتج فى بنية مناسبة ويجب استخدامة فقط لدعم الحد الأقصى للوزن المشار إليه.

BT8583 **PARTS LIST**

PLEASE KEEP THIS FOR FUTURE REFERENCE

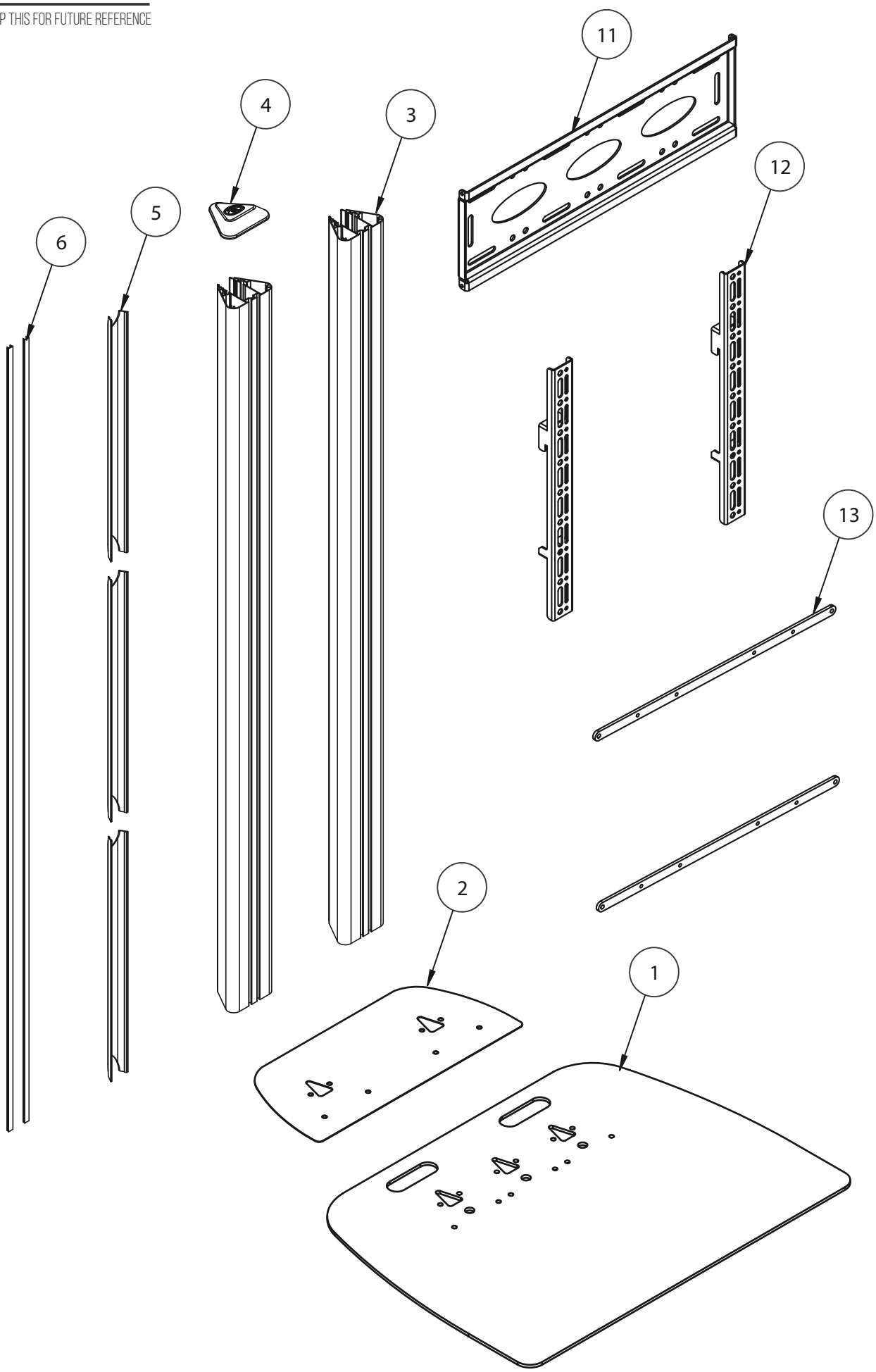

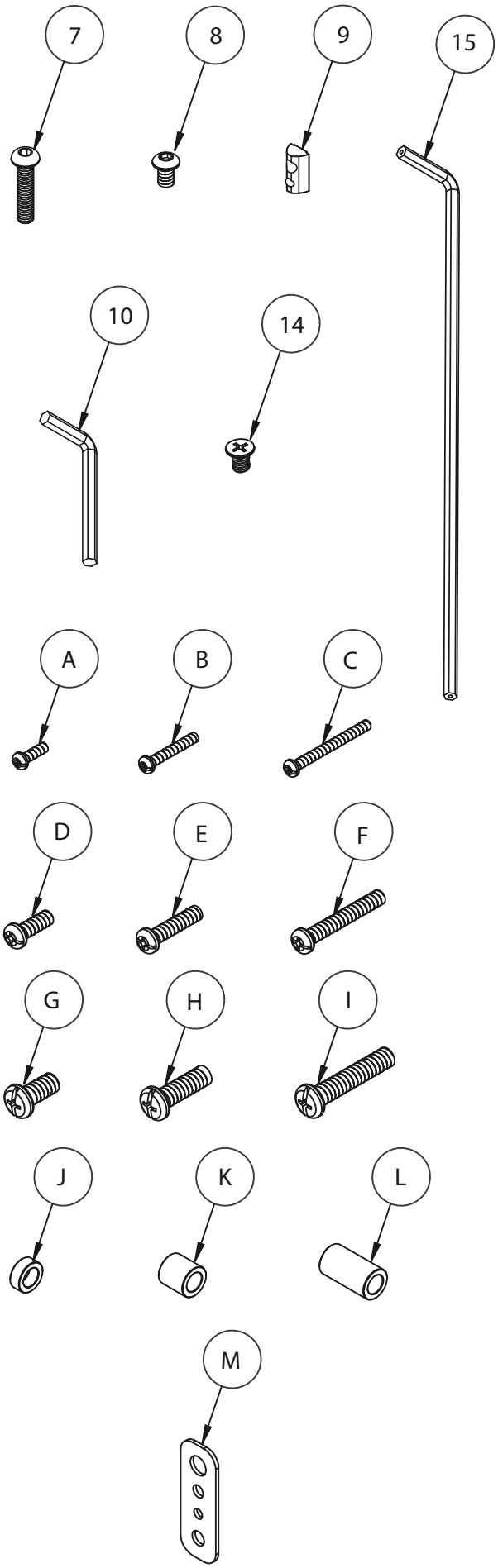

ITEM	PART NAME	QTY
1	FLOOR BASE	1
2	COVER PLATE	1
3	VERTICAL COLUMN 1.8M	2
4	COLUMN CAP	2
5	REAR COVER	6
6	PLASTIC SLOT INSERT	4
7	M8 x 35mm HEX SCREW	8
8	M8 x 12mm HEX SCREW	10
9	M8 SLIDING INSERT	10
10	5AF HEX KEY	2
11	MOUNTING PLATE	1
12	INTERFACE ARMS	2
13	600mm ADAPTOR ARM	2
14	M8 x 12mm CSK SCREW	4
15	4AF LONG HEX KEY	1
INTERFACE KIT		
A	M4 x 12mm SCREW	4
B	M4 x 25mm SCREW	4
C	M4 x 40mm SCREW	4
D	M6 x 16mm SCREW	4
E	M6 x 25mm SCREW	4
F	M6 x 40mm SCREW	4
G	M8 x 16mm SCREW	4
H	M8 x 25mm SCREW	4
I	M8 x 40mm SCREW	4
J	M8 5mm SPACER	4
K	M8 13mm SPACER	4
L	M8 24mm SPACER	4
M	MULTIWASHER	4

Suitable for loads up to 70kg (154lbs)

INSTALLATION TOOLS REQUIRED

Crosshead screwdriver

Level *(Optional)*

INSTALLATION INSTRUCTIONS

1. ATTACH COLUMNS TO BASE

Fix *item 3* to *items 1 & 2* using *item 7*.

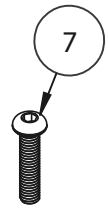

M8 x 35mm
HEX SCREW

Note: Use the double sided tape on the bottom of the *item 2* to fix the cover in place on *item 1*.

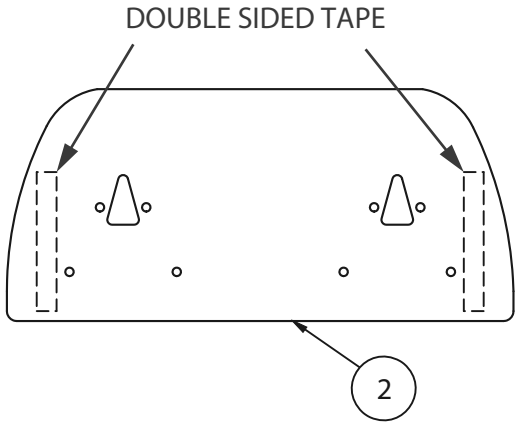

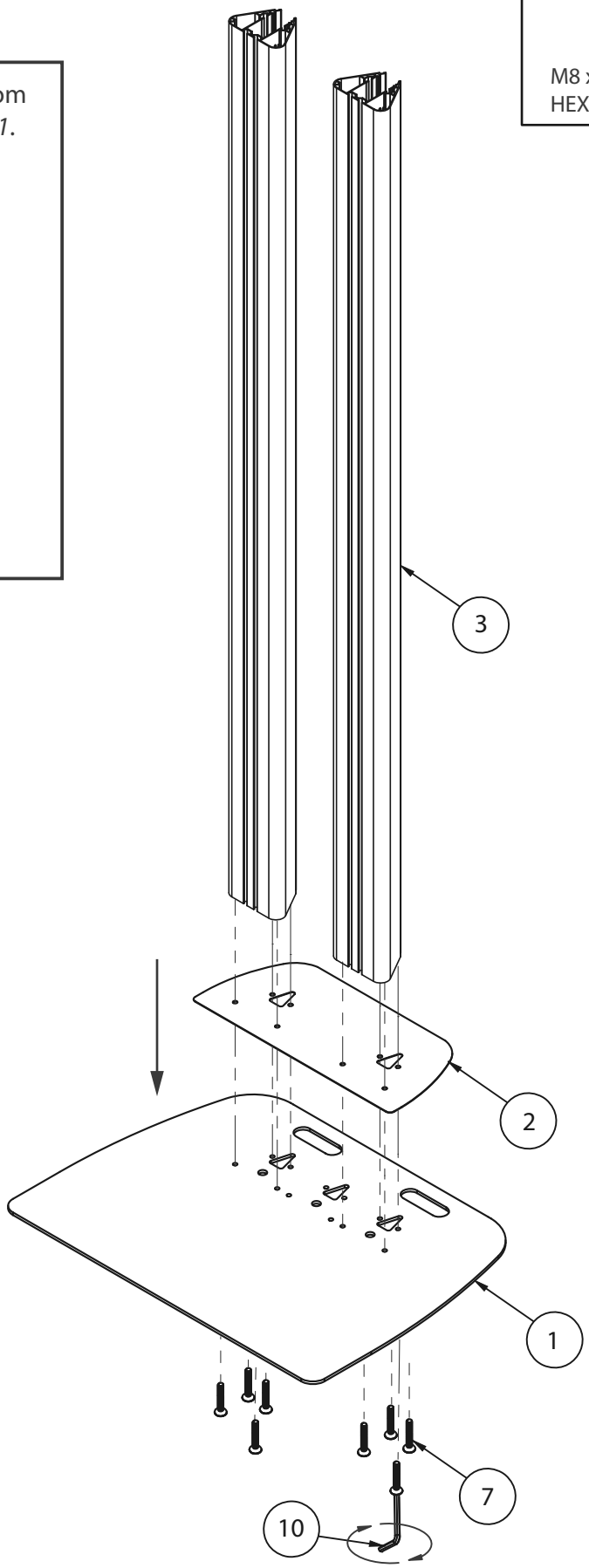

2. ATTACH MOUNTING PLATE TO COLUMNS

i. Insert 4x *item 9* into *item 3* (2 in each channel).

Note: Position *item 9* in the columns at the preferred height for the screen mount.

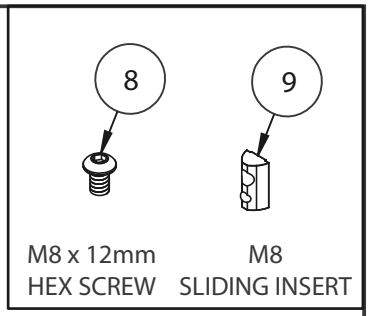

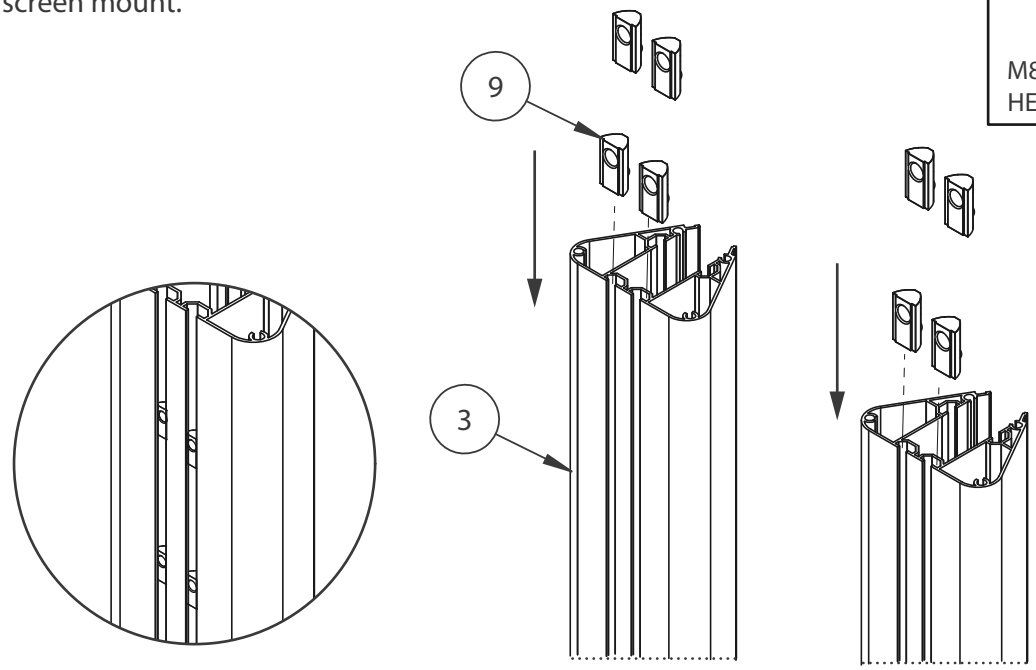

ii. Fix *item 11* to item 3 using *items 8 & 9*.

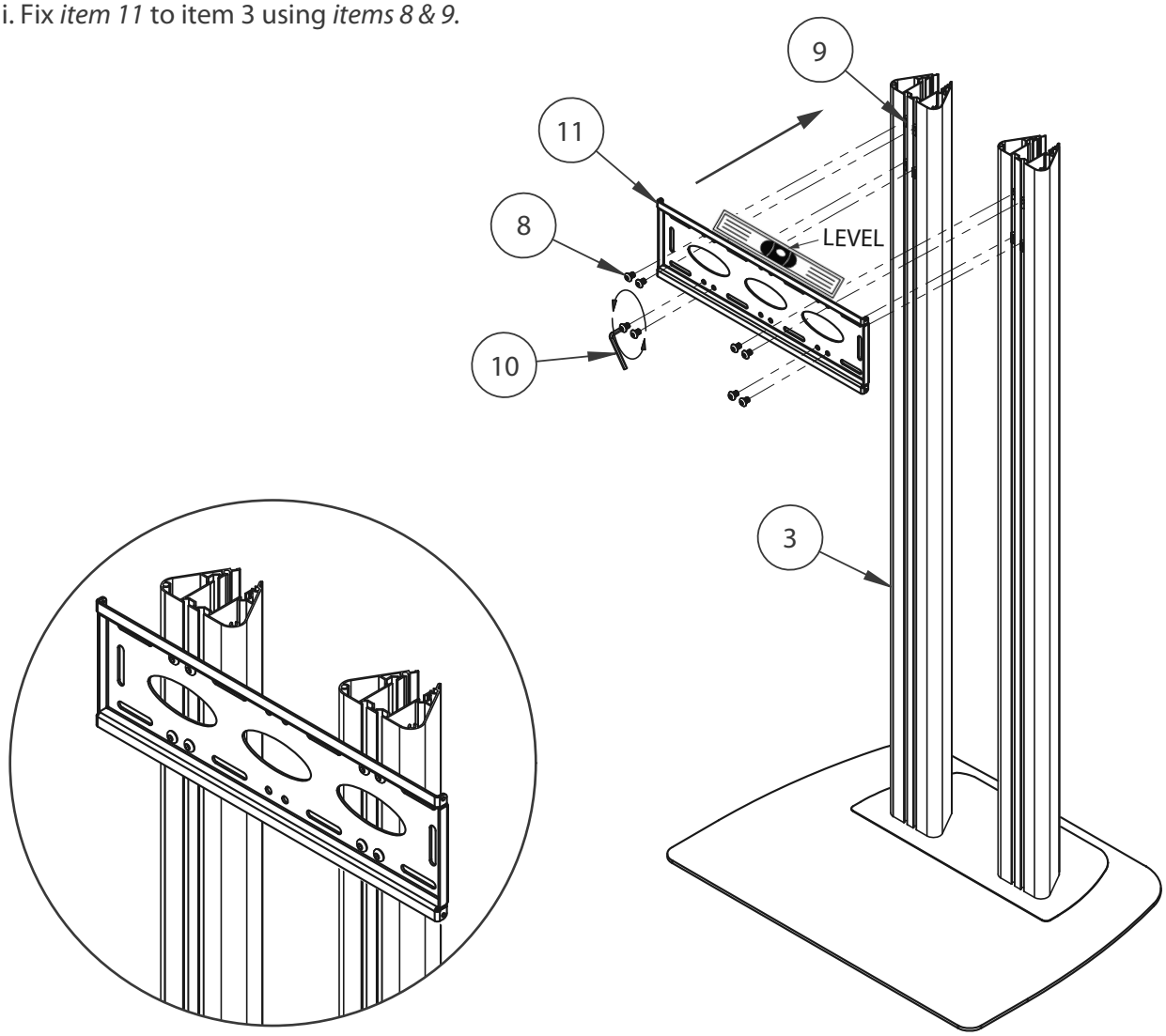

3. FIX INTERFACE ARMS TO SCREEN

Fix *items 12* to the back of the screen using the interface kit (*items A-M*).

Note: Ensure the arms are facing the correct way round and the same holes are used on both arms.

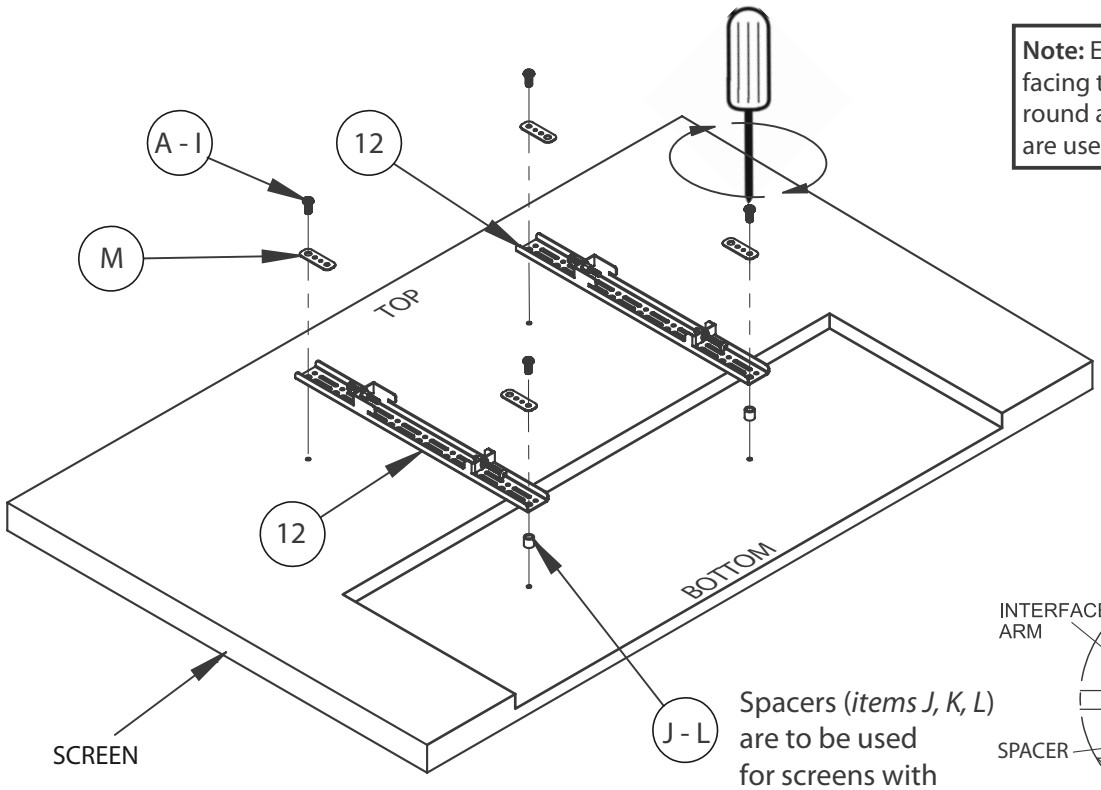

Spacers (*items J, K, L*) are to be used for screens with recessed fixings.

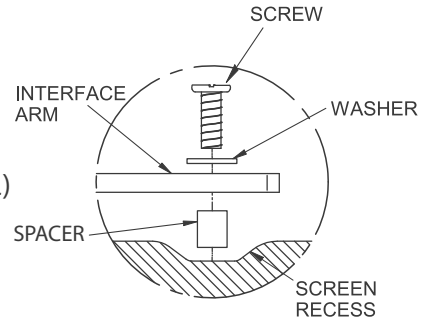

OPTIONAL **ADAPTOR ARMS**

FOR SCREENS WITH VESA 600 x 400 FIXINGS

i. Attach *item 13* to *item 12* using *item 14*.

ii. Fix *item 13* to the back of the screen using the screen interface kit *(items A - I)*.

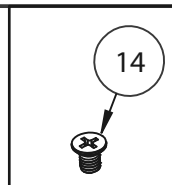

M8 x 12mm CSK SCREW

ASSEMBLY FOR PORTRAIT ORIENTATION

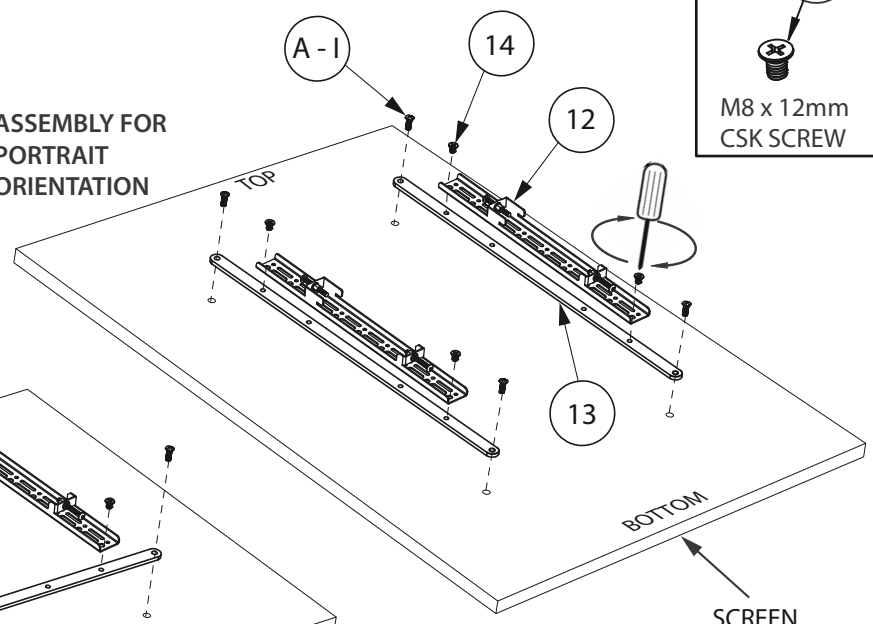

ASSEMBLY FOR LANDSCAPE ORIENTATION

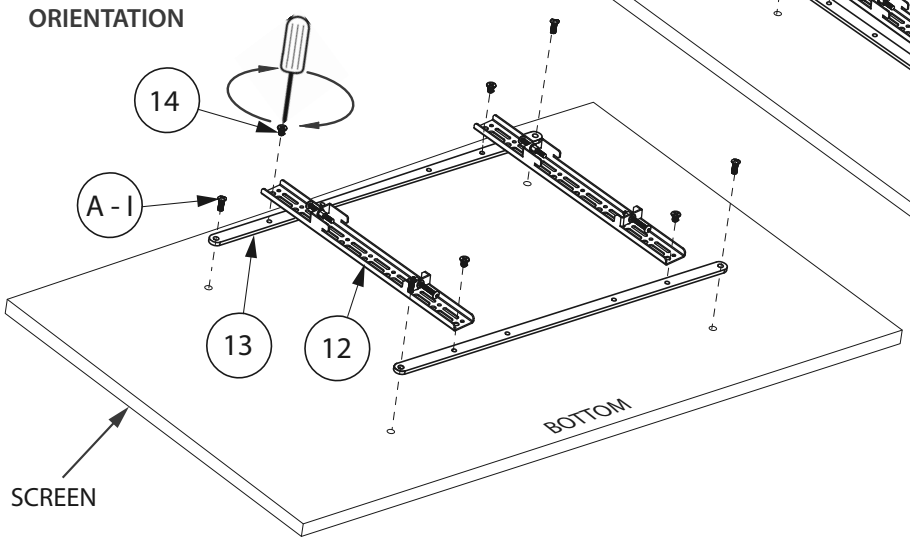

4. MOUNT SCREEN ONTO STAND

Hook screen onto *item 11*.

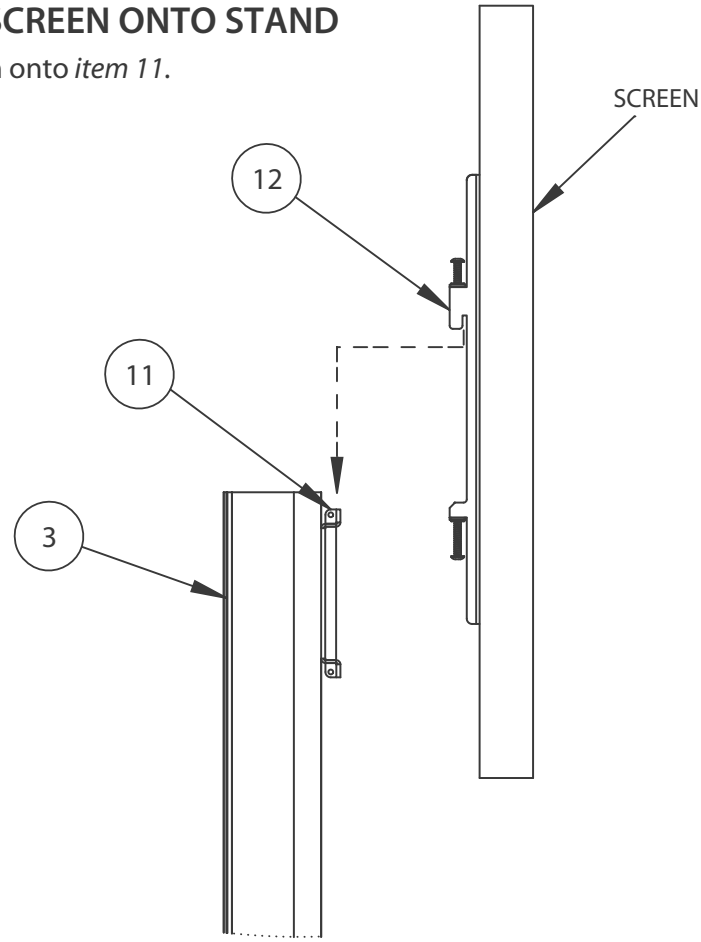

Note: If necessary, once screen is mounted laterally adjust by hand.

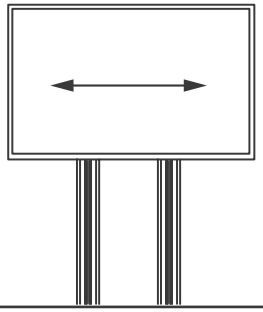

5. SECURE SCREEN TO MOUNTING PLATE

Lock screen onto *item 11* using the safety screws at the bottom of *item 12*.

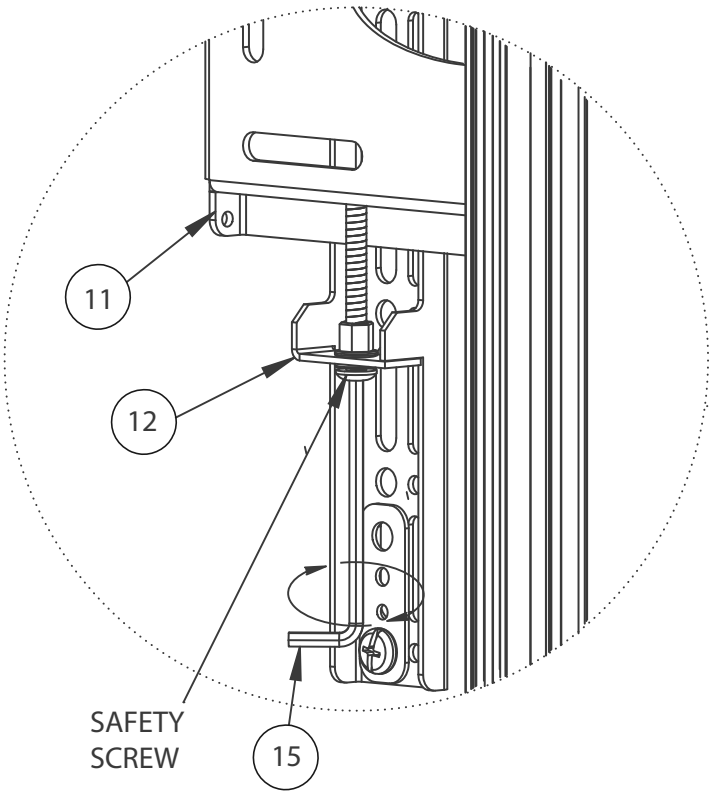

HEIGHT ADJUSTMENT SCREW

Optional: Level screen using the height adjustment screws at the top of *item 12*.

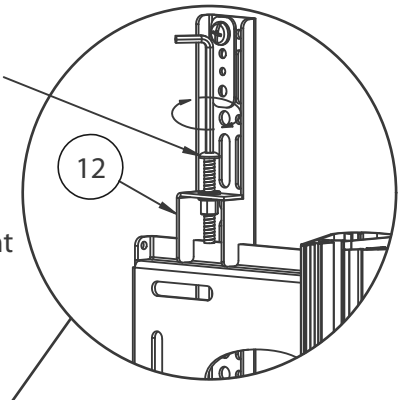

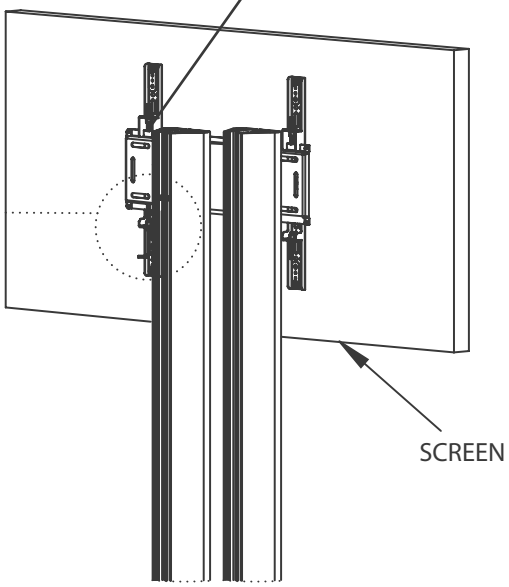

6. ATTACH COVERS

i. Route screen cables through the back of of *item 3* and attach *item 5*.

ii. Fit *item 4* to the top of *item 3*.

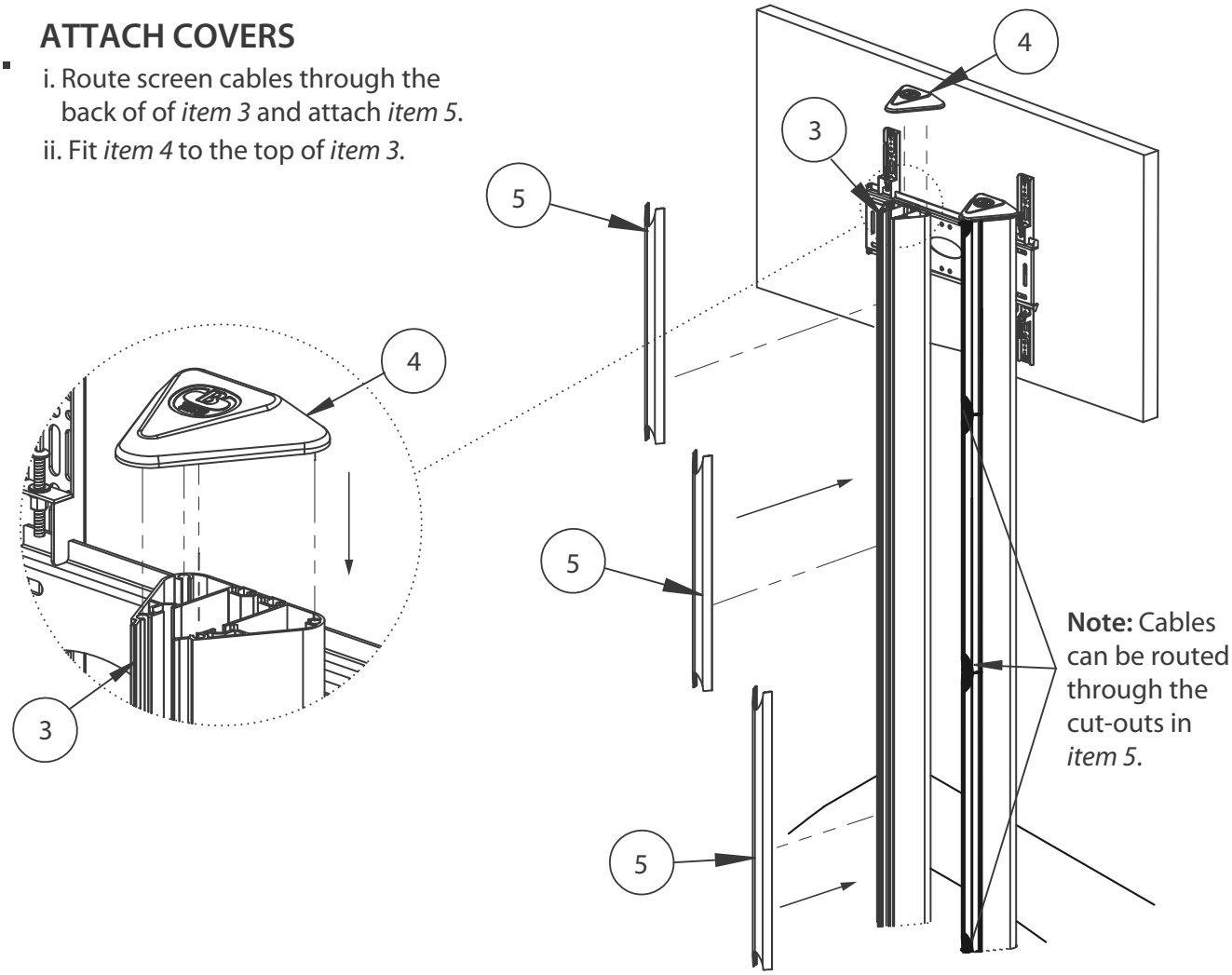

iii. Insert *item 6* into the front slots on *item 3*.

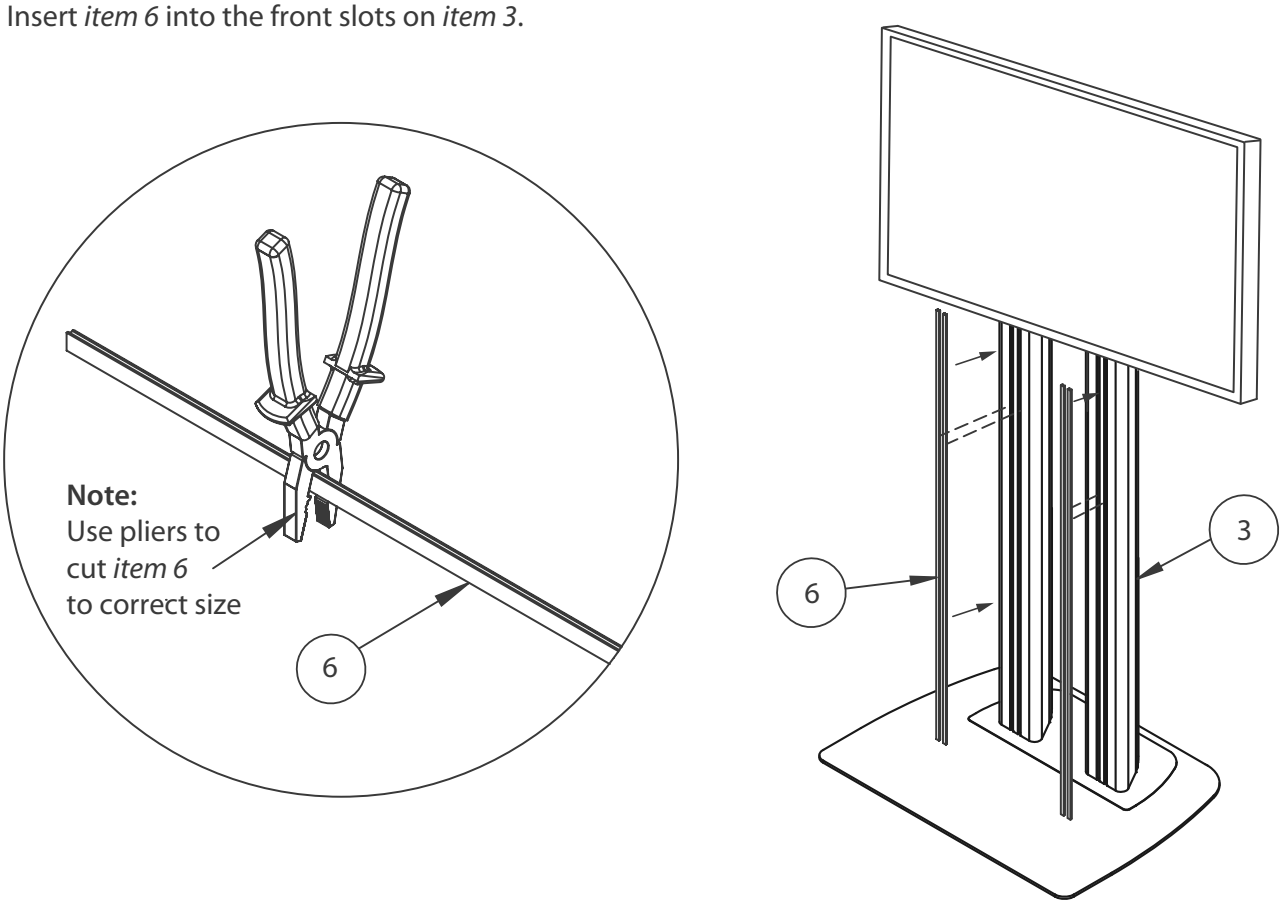

BT8583 **DIMENSIONS**

PLEASE KEEP THIS FOR FUTURE REFERENCE

FRONT VIEW

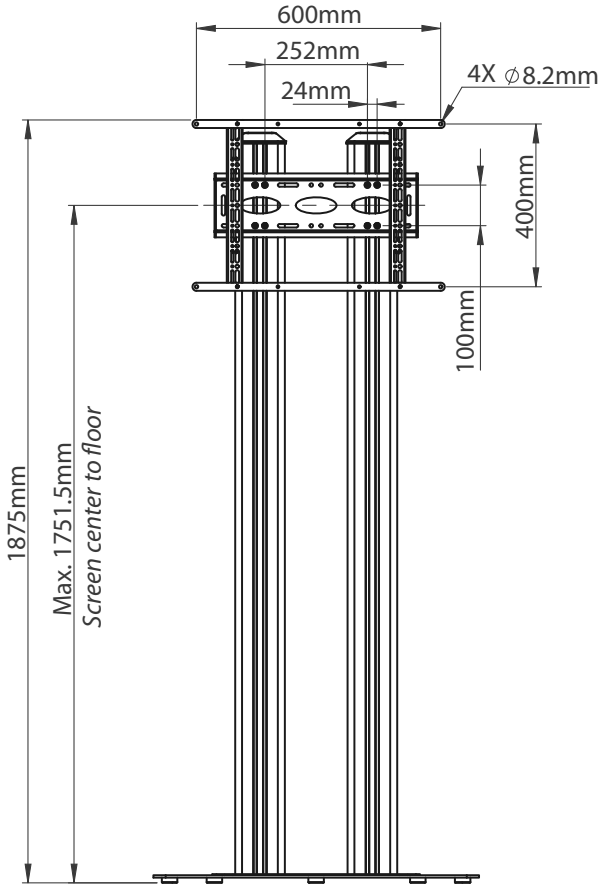

REAR VIEW

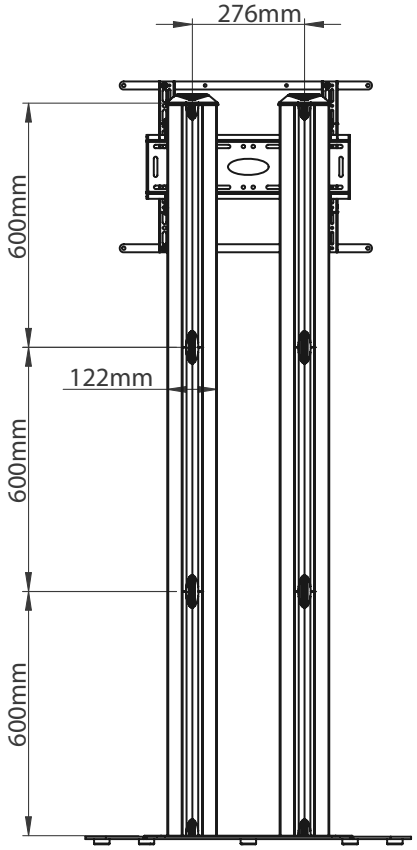

SIDE VIEW

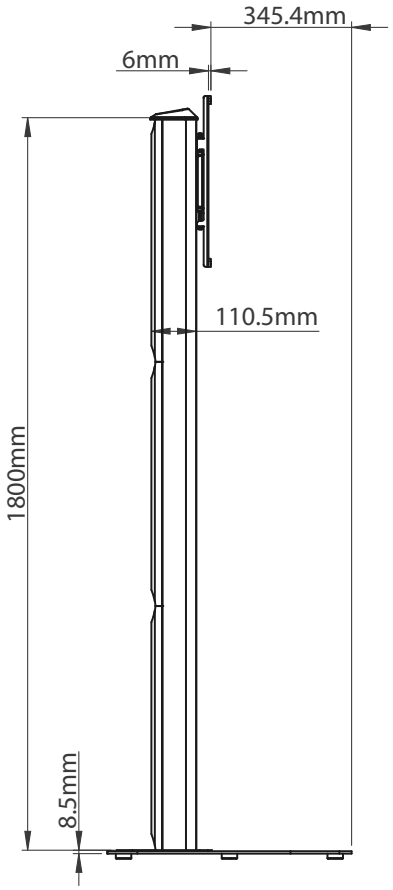

TOP VIEW

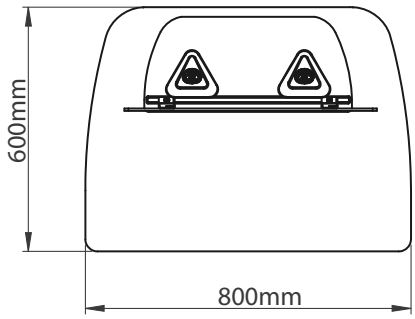

SCREEN INTERFACE WITHOUT ADAPTORS

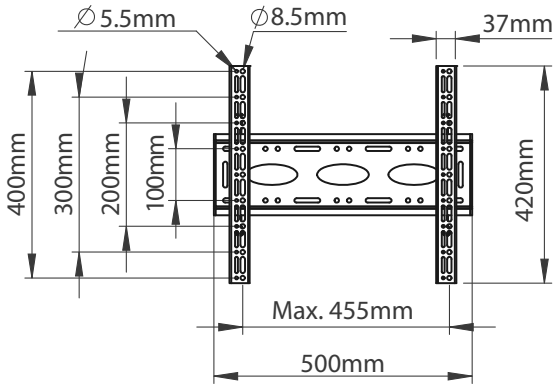

THESE INSTRUCTIONS ARE INTENDED AS A GUIDE ONLY AND B-TECH ACCEPTS NO LIABILITY FOR THE ACCURACY OF THE INFORMATION CONTAINED IN THIS DOCUMENT.

B-TECH AV MOUNTS

CONTACT:
info@btechavmounts.com

©2021 B-Tech International Design and Manufacturing Ltd. All rights reserved.

B-Tech AV Mounts is a division of B-Tech International Design and Manufacturing Ltd.
B-Tech AV Mounts and the B-Tech logo are registered trade marks.
All other brands and product names are trademarks of their respective owners.
Photographs are for illustrative purposes only. E&OE.

AMA-BT8583-V1-0821-BTECH MADE IN VIETNAM