INTEGRUS

Wireless Language Distribution System

en User manual

Table of contents

1	**Safety**	**5**
2	**About this manual**	**6**
2.1	Purpose	**6**
2.2	Intended audience	**6**
2.3	Related documentation	**6**
2.4	Use latest software	**6**
2.5	Alerts and notice signs	**7**
2.6	Copyright and disclaimer	**7**
2.7	Document history	**7**
3	**System overview**	**8**
3.1	Security measures	**10**
3.2	Transmitter OMNEO	**11**
3.3	Radiators	**13**
3.3.1	Charging units	**15**
3.4	Receivers	**17**
3.4.1	Normal operation	**18**
3.5	Receiver headphones	**19**
4	**Planning**	**20**
4.1	IR radiation	**20**
4.2	Aspects of Infrared distribution systems	**20**
4.2.1	Directional sensitivity of the receiver	**20**
4.2.2	The footprint of the radiator	**21**
4.2.3	Ambient lighting	**23**
4.2.4	Objects, surfaces and reflections	**24**
4.2.5	Position the radiators	**24**
4.2.6	Overlapping footprints and black spots	**27**
4.3	Plan an Integrus infrared radiation system	**29**
4.3.1	Rectangular footprints	**29**
4.3.2	Plan radiators	**30**
4.3.3	Cabling	**31**
5	**Installation**	**32**
5.1	Transmitter OMNEO	**32**
5.2	Medium and high power radiators	**32**
5.2.1	Attach mounting plate to the suspension bracket	**33**
5.2.2	Attach the suspension bracket	**34**
5.2.3	Mount radiator on a floor stand	**34**
5.2.4	Mount radiator on a wall	**35**
5.2.5	Mount radiator on a ceiling	**36**
5.2.6	Mount radiator on horizontal surfaces	**36**
5.2.7	Secure the radiator with a safety cord	**36**
5.3	Integrus receivers	**37**
5.4	Integrus Charging Units	**37**
6	**Connection**	**39**
6.1	Power the Transmitter OMNEO	**39**
6.2	Connect to another transmitter	**40**
6.3	Connect the radiators	**41**
7	**System setup**	**42**
7.1	DICENTIS controlled mode	**42**

7.2	Manually controlled mode	**43**
7.3	Slave mode	**44**
8	**Configuration**	**45**
8.1	Transmitter OMNEO	**45**
8.1.1	Status Dashboard	**45**
8.1.2	Audio Configuration	**45**
8.1.3	Carrier Management	**45**
8.1.4	Network Settings	**46**
8.1.5	General Settings	**46**
8.1.6	Licensing	**46**
8.1.7	User Management	**47**
8.2	Integrus Radiators	**48**
8.2.1	Set the output power selection switch	**48**
8.2.2	Set the delay switches	**48**
8.3	Determine the radiator delay switch positions	**48**
8.3.1	System with one transmitter	**49**
8.3.2	System with two or more transmitters in one room	**52**
8.3.3	Systems with more than 4 carriers and a radiator under a balcony	**54**
9	**Third-party integration**	**55**
10	**Testing**	**56**
10.1	Integrus Receiver	**56**
10.2	Test the coverage area	**56**
11	**Maintenance**	**58**
12	**Technical data**	**59**
12.1	Electrical	**59**
12.1.1	Overall system characteristics	**59**
12.1.2	Transmitter	**59**
12.1.3	Radiators and Accessories	**59**
12.1.4	Receivers, battery packs, and chargings units	**60**
12.2	Mechanical	**61**
12.2.1	Transmitter	**61**
12.2.2	Radiators and Accessories	**61**
12.2.3	Receivers, Battery Packs and Charging Units	**62**
12.3	Environmental	**63**
12.3.1	Overall system conditions	**63**
12.3.2	Transmitter	**63**
12.4	Rules and Standards	**65**
12.4.1	Overall system conformance	**65**
12.5	Guaranteed rectangular footprints	**65**
12.5.1	Metric values of radiators with hardware version higher than 2.00	**65**
12.5.2	Imperial values of radiators with hardware version higher than 2.00	**67**
12.5.3	Metric values of radiators with hardware version lower than 2.00.	**69**
12.5.4	Imperial values of radiators with hardware version lower than 2.00.	**71**
13	**Support services and Bosch Academy**	**73**

1 Safety

Prior to installing or operating the products, always read the installation instructions in section Installation and the Safety Instructions which are provided with the mains powered products.

Warning!
To prevent possible hearing damage, do not listen at high volume levels for long periods.

FCC Supplier’s Declaration of Conformity
Changes or modifications not expressly approved by the party responsible for compliance could void the user's authority to operate the equipment.

Note: This equipment has been tested and found to comply with the limits for a Class A digital device, pursuant to part 15 of the FCC Rules. These limits are designed to provide reasonable protection against harmful interference when the equipment is operated in a commercial environment. This equipment generates, uses, and can radiate radio frequency energy and, if not installed and used in accordance with the instruction manual, may cause harmful interference to radio communications. Operation of this equipment in a residential area is likely to cause harmful interference in which case the user will be required to correct the interference at his own expense.

2 About this manual

2.1 Purpose

The purpose of this document is to provide information required for installing, configuring, operating, maintaining and troubleshooting an Integrus Language Distribution System.

2.2 Intended audience

This document is intended for installers and users of an Integrus Language Distribution System.

2.3 Related documentation

– DICENTIS Installation and configuration manuals. Refer to the product related information at: www.boschsecurity.com.

2.4 Use latest software

Before operating the device for the first time, make sure that you install the latest applicable release of your software version. For consistent functionality, compatibility, performance, and security, regularly update the software throughout the operational life of the device. Follow the instructions in the product documentation regarding software updates.
If the INT-TXO is connected to the DICENTIS Conference System or uses DICENTIS sources in Manually controlled mode, upgrade the software of the INT-TXO with the firmware upgrade tool of the DICENTIS software, which is installed on the DICENTIS server. With this software, the INT-TXO can operate in the DICENTIS controlled and Manually controlled modes.
If the INT-TXO only operates in Manually controlled mode and does not use DICENTIS sources, download the firmware installation package from the INT-TXO product page in the product catalog. This package installs a firmware upload tool and the latest INTEGRUS firmware. The firmware upload tool enables the installation of the software in the INT-TXO.
The following links provide more information:
– General information: https://www.boschsecurity.com/xc/en/support/product-security/
– Security advisories, that is a list of identified vulnerabilities and proposed solutions: https://www.boschsecurity.com/xc/en/support/product-security/security-advisories.html

Bosch assumes no liability whatsoever for any damage caused by operating its products with outdated software components.

2.5 Alerts and notice signs

Four types of signs can be used in this manual. The type is closely related to the effect that may be caused if it is not observed. These signs - from least severe effect to most severe effect - are:

Notice!
Containing additional information. Usually, not observing a ‘notice’ does not result in damage to the equipment or personal injuries.

Caution!
The equipment or the property can be damaged, or persons can be lightly injured if the alert is not observed.

Warning!
The equipment or the property can be seriously damaged, or persons can be severely injured if the alert is not observed.

Danger!
Not observing the alert can lead to severe injuries or death.

2.6 Copyright and disclaimer

All rights reserved. No part of this document may be reproduced or transmitted in any form by any means, electronic, mechanical, photocopying, recording, or otherwise, without the prior written permission of the publisher. For information on getting permission for reprints and excerpts, contact Bosch Security Systems B.V..
The content and illustrations are subject to change without prior notice.

2.7 Document history

Release date	Documentation version	Reason
2023-01	V01	Release of INT-TXO.
2024-07	V02	Extension of the INT-TXO functionality with the Manually controlled operating mode.

3 System overview

INTEGRUS is a system for wireless distribution of audio signals through infrared radiation. It can be used in a simultaneous interpretation system for international conferences where multiple languages are used. To enable all participants to understand the discussion, interpreters simultaneously translate the speaker's language as required. These interpretations are distributed throughout the conference venue, and participants select their preferred language and listen to it through headphones.

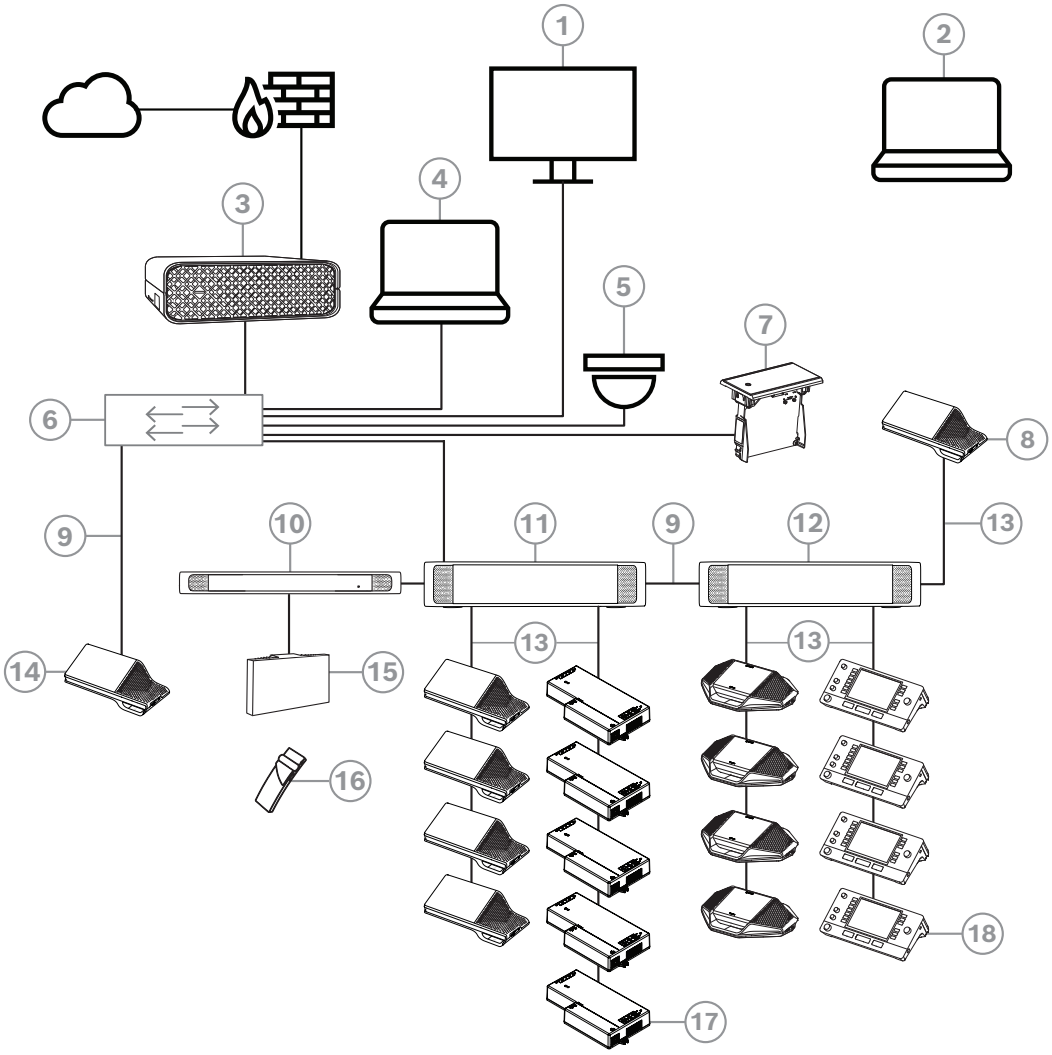

Figure 3.1: Typical DICENTIS Conference System setup

A typical DICENTIS Conference System consists of:

1. Hall display of the conference room:
– Shows a synoptic layout of the meeting or meeting notes.
2. Laptop:
– Used by a meeting participant joining remotely.
3. DICENTIS System server:
– The heart of the system. It licenses functionality, configures and controls the system.
4. Client PC:
– Can be used to: Manage meetings, prepare meetings and configure the system.
5. Optional video camera (Onvif Profile-S compatible cameras, Sony IP cameras via CGI commands, or Panasonic HD Integrated IP) + external power supply:

- Captures the image of a speaking participant.

6. Ethernet switch:

- Ethernet switch with PoE on some ports.
  - Routes de system data via Ethernet.
  - Provides power to the DICENTIS devices via PoE.

7. Flush language selector:

- This device allows the participants to easily choose their preferred language.

8. Multimedia device:

- This device is used for “system power on/off”. It is always connected to the powered socket of the Audio processor and powering switch or Powering switch.
  Note: Only one DICENTIS Multimedia device should be connected here.

9. CAT-5e Ethernet cable (minimum requirement).
10. Transmitter OMNEO:

- This device allows for wireless language distribution.

11. Powering switch:

- Used to increase the number of DICENTIS devices connected to the system.

12. Audio processor and powering switch:

- Controls the system audio, routes audio from and to the system and supplies power to the DICENTIS devices.

13. System Network Cable:

- Connects DICENTIS devices, the Audio processor and powering switch, and one or more Powering switches to each other.

14. Multimedia device**:**

- Only one DICENTIS device should be connected here.

15. Integrus Radiator:

- Through infrared distribution, the signals from the INT-TXO are transmitted to the radiators in the room.

16. Integrus Pocket Receiver:

- The pocket receivers collect the signals sent by the radiators.

17. Flush base device:

- This device is intended for use in flush-mounted solutions, adding a number of functions.

18. Interpreter Desk**:**

- Provides extensive facilities for professional interpretation for the DICENTIS Conference System.
  Note: A maximum of 10 desks can be installed per booth.

The INTEGRUS Wireless Language Distribution System comprises one or more of the following:

Transmitter OMNEO
The transmitter is the core of the INTEGRUS system. The INT-TXO Transmitter OMNEO connects directly to the DICENTIS conference system. This transmitter has four infrared language channels (0-3). The number of channels can be extended through the INT-L1AL.

Infrared radiators
Two radiators are available:
- The LBB4511/00 Radiator for medium size area is a medium-power radiator for small and medium conference venues
- The LBB4512/00 Radiator for large size area is a high-power radiator for medium and large conference venues.

The radiators can be mounted on walls, ceilings or floor stands.

Infrared receivers
Three multi-channel infrared receivers are available:
- The LBB4540/04 Pocket receiver for 4 languages for 4 audio channels
- The LBB4540/08 Pocket receiver for 8 languages for 8 audio channels
- And the LBB4540/32 Pocket receiver for 32 languages for 32 audio channels.

The receivers can operate with a rechargeable NiMH battery pack or with disposable batteries. The charging circuitry is incorporated in the receiver.

Charging equipment
This equipment is available for charging and storing 56 infrared receivers. Two versions are available:
- The LBB4560/00 Charger case for 56x LBB4540 for portable systems
- And the LBB4560/50 Charger cabinet for 56x LBB4540 for permanent systems

3.1 Security measures

The installer takes care of security measures to prevent improper use of the system via the Internet and local wired or wireless networks.

Consider the following items to increase security:
- Change the admin user name.
- Prevent unauthorized access to the INT-TXO.
- Prevent unauthorized physical and logical access to the wired Ethernet connection of the INT-TXO.
- Place the INT-TXO in a separate VLAN.
- Use a firewall.
- Install the latest INT-TXO software.
- Set a PIN code on each Dante™ device, as indicated below.

To set a PIN code for a Dante™ device:
1. Open the Dante Controller application
2. Select the *Device Info* tab

3. In the *Device Lock* column, left click the row of the device you wish to lock
4. Enter a 4-digit code in the *PIN* field, and confirm the code in the *Confirm PIN* field
5. Click the *Lock* button

⇨ The PIN code is now set for the Dante™ device.

3.2 Transmitter OMNEO

The INT-TXO is the central element in the INTEGRUS system that allows INTEGRUS to interact with the DICENTIS Conference System. The INT-TXO modulates the signals into carrier waves and transmits them to the radiators in the room.

INT-L1AL 1 Additional language license

In addition to the four standard channels, you can add 28 more language channels to the INT-TXO through the INT-L1AL 1 Additional language license. The Transmitter OMNEO allows for a maximum of 32 channels.

Front view

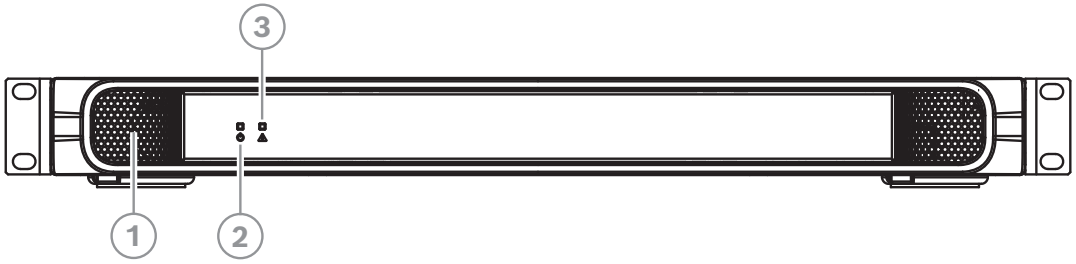

1	**Ventilation inlet**.
2	**LED Indication**: – Off: Power off. – Green: Power on. – Blinking green: Transmitter not (yet) connected to source. – Amber: Standby mode. – Blinking amber: Standby mode and not yet connected to DICENTIS or Dante™. – Blinking green/amber: Factory mode, needs to upgrade.
3	**LED Indication**: – Off: Power off. – Green: Master mode. – Blinking green: For a future release. – Amber: Slave mode. – Blinking amber: Transmitter not (yet) connected to a radiator. – Blinking green/amber: General error.

Rear view

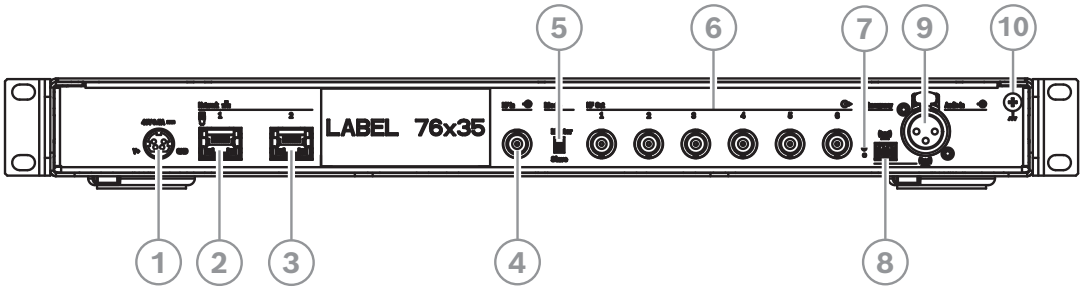

1	**Power supply**.
2	**Network 1:** Supports powering through DICENTIS or PoE.
3	**Network 2:** Supports powering through DICENTIS.
	The LEDs next to the network connectors share the same behavior: – Red/green or amber/green blinking: The transmitter needs to be upgraded. – Yellow: Network activity present. – Green: Network speed of 1 GB. – Orange: Network speed of 100 MB.
4	**HF In:** Slave input. BNC connector that accepts an HF signal from a transmitter in Master mode.
5	**Mode Master/Slave** switch. The default mode is Master.
6	**HF Out 1-6**: Six high-frequency BNC connectors, used to connect to the radiators. Up to 30 radiators can be connected in a loop to each output.
7	**Reset** button: Press and hold for 10 seconds to reset the device to factory settings.
8	**Emergency** terminal block socket for distribution of emergency messages to all channels.
9	**Audio In:** XLR socket distribute audio to all channels.
10	**Chassis ground**.

3.3 Radiators

The radiators accept the carrier signals generated by the transmitter and emit infrared radiation carrying up to 32 audio distribution channels. The radiators are connected to one or more of the 6 HF BNC outputs of the IR transmitter. Connect a maximum of 30 radiators to each of these outputs by means of loop-through connections.
The LBB4511/00 has an infrared output of 21 Wpp, while the LBB4512/00 has an infrared output of 42 Wpp. Both select automatically the mains power voltage and switch on when the transmitter is switched on.
The radiator equalizes automatically the attenuation of the signal by the cable. The radiator initializes the equalization when the radiator is supplied with power and the transmitter is switched on. The red LED flashes for a brief period of time to indicate that the initialization is in progress.
When not receiving carrier waves, the radiators switch to standby mode. The temperature protection mode is also available. It automatically switches the radiators from full to half power or from half power to standby if the temperature of the IREDs becomes too high.

Front view

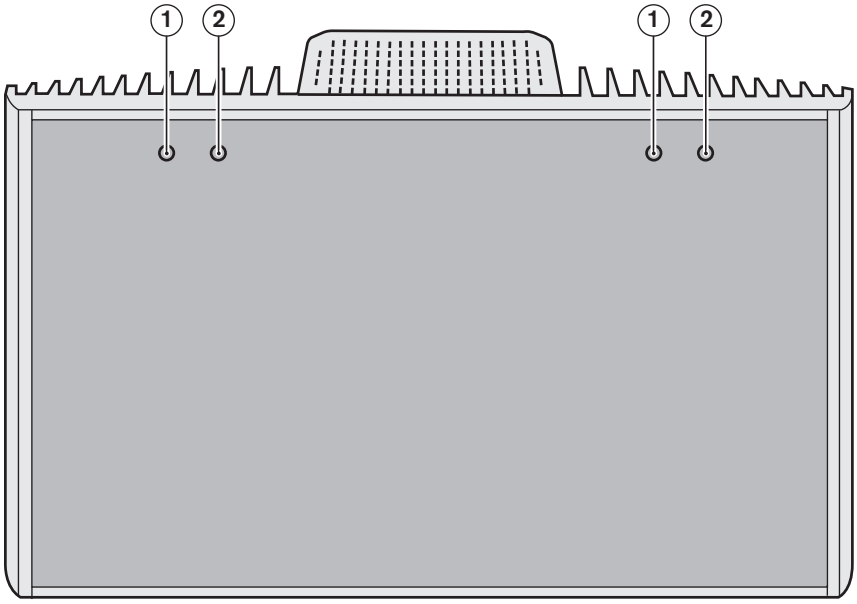

1	**Red LED**	2	**Amber LED**	**Status**
On		Off		Standby mode.
Off		On		Transmitting.
Blinking		On		At switch-on: Initializing signal equalization. During operation: Temperature protection mode.
On		On		IRED panel failure.

Notice!
The indicator LEDs are positioned behind the semi-transparent cover. For this reason, the LEDs are only visible when ON.

Notice!
When in operation, the radiators might feel warm to the touch. This is the expected behavior, and does not indicate a radiator fault or malfunction.

Side and rear view

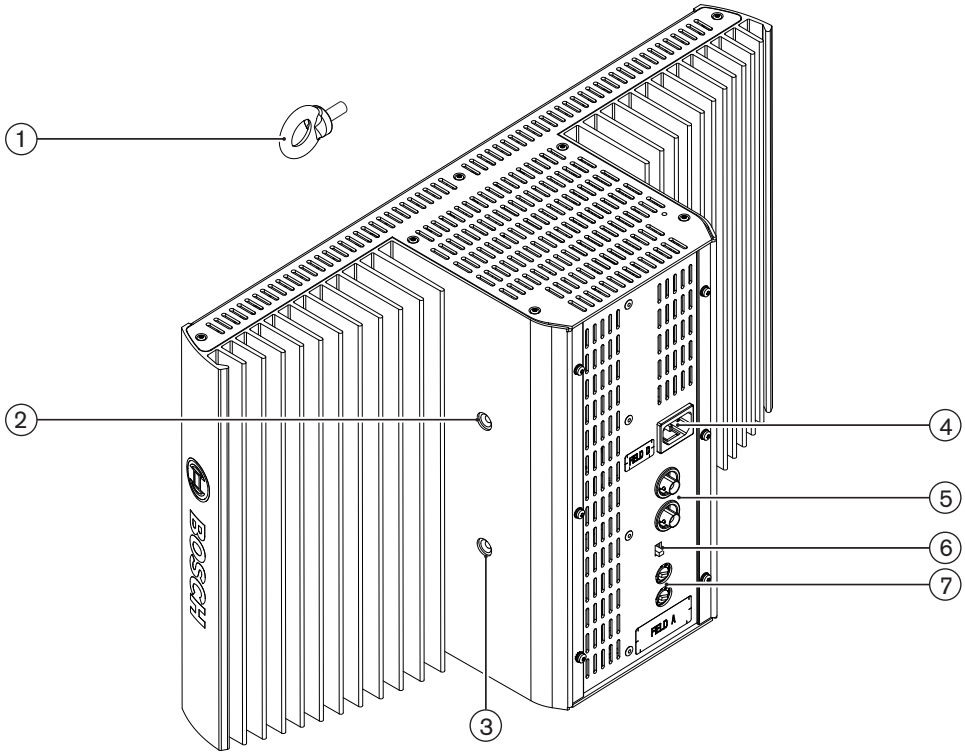

1	**Safety eye**: Used to mount a safety cord for extra security.
2	**Safety eyehole**: Tapped hole to mount the safety eye.
3	**Bracket hole**: Tapped hole to mount the suspension bracket.
4	**Mains input**: Male Euro mains connector. The radiators selection automatically the mains voltage.
5	**IR signal input/loop-through**: Two HF BNC connectors for connecting the radiator to the transmitter and for loop-through connection to other radiators. A built-in switch in the BNC connectors achieves automatic cable termination.
6	**Output power selection switch**: Switch the radiators between full and half-power operation.
7	**Delay compensation switches**: Two switches in the 10-position to compensate for differences in cable lengths to the radiators.

Suspension bracket and mounting plate of LBB4511/00 and LBB4512/00

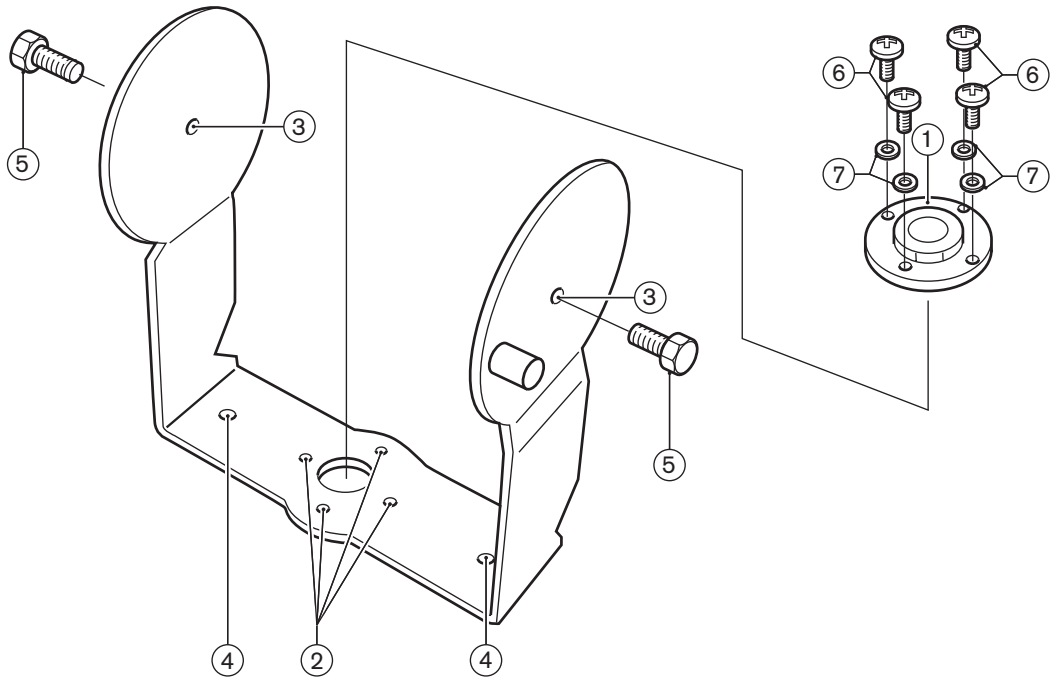

1	**Mounting plate**: Accessory plate used in case of mounting on a floor stand or of wall-mounting. Depending on the way of mounting, install the mounting plate at one or the other side of the bracket.
2	**Mounting plate hole**: Tapped holes to mount the mounting plate.
3	**Radiator hole**: Holes for bolts.
4	**Mounting hole**: Holes for screws to mount the bracket to the ceiling or on horizontal surfaces.
5	**Bolt**: Bolt to mount the suspension bracket to the radiator.
6	**Screw**: Screw to mount the mounting plate to the suspension bracket.
7	**Washer**

Refer also to *Attach mounting plate to the suspension bracket, page 33*.

3.3.1 Charging units

The charging units can recharge up to 56 receivers at once. The charging unit contains the power supply with automatic mains voltage selection. The charging electronics and a charging indicator LED are integrated in each receiver. The charging circuitry checks if a battery pack is present and controls the charging process.

Two versions are available, which are functionally identical:
- LBB4560/00 Charger case for 56x LBB4540 for portable systems.
- LBB4560/50 Charger cabinet for 56x LBB4540 for permanent systems. Suitable for either tabletop or wall-mounted use.

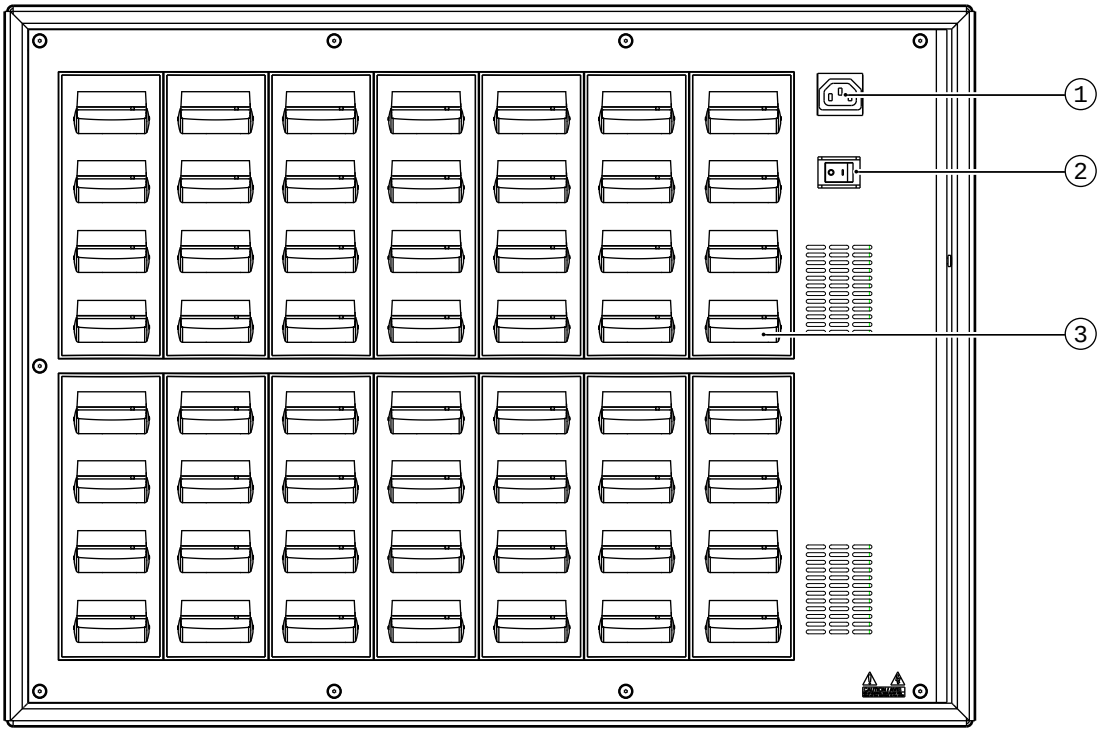

Figure 3.2: LBB4560 Charging unit

1	**Mains input**: Male Euro mains socket. The charging unit has automatic mains voltage selection. A mains cable is provided.
2	**Mains on/off switch**
3	**Receiver positions**: One charging unit can charge up to 56 receivers simultaneously.

Make sure that the charging unit is connected to the mains and that it is switched on. Place the receivers firmly in the charging compartments. The charging indicator on the power on/off button of all receivers should turn on. The indicator shows the charging status of each receiver:

LED color	Charging status
Green	Charging completed.
Red	Charging in progress.
Red blinking	Error status.
Off	Charger switched off or receiver not properly inserted.

Notice!
These charging units are only intended to charge LBB4540 receivers with an LBB4550/10 battery pack. You cannot charge other receiver types with the LBB4560 charging units, nor can you use other charging units to charge LBB4540 receivers.
It is preferred to switch on the charging unit before inserting the receivers. Receivers can be inserted or removed without damage while the charging unit is switched on.
Charge the battery pack to full capacity before using them for the first time.
The charger always applies fast charge during the first 10 minutes after inserting a receiver. Inserting the receiver multiple times with a fully charged battery pack should therefore be avoided, as this will damage the battery pack.
Continuously charging the receiver will not damage the receiver or battery pack. Receivers can therefore safely be left in their charging positions when they are not used.

3.4 Receivers

LBB4540 receivers are available for 4, 8 or 32 channels. They can operate with a rechargeable NiMH battery pack or with disposable batteries. The receivers have controls for channel selection, volume adjustment, and an on/off push button. All receivers have a 3.5 mm (0.14 inch) stereo jack output socket for mono or stereo headphones.
An LCD display shows the channel number and indicators for signal reception and low battery power.
The charging circuitry is included in the receiver.

Notice!
When you put the receiver into storage for a long period, make sure:
- That the humidity is less than 60%
- That the temperature is less than 25 °C.
- That the receiver is re-charged every few months.

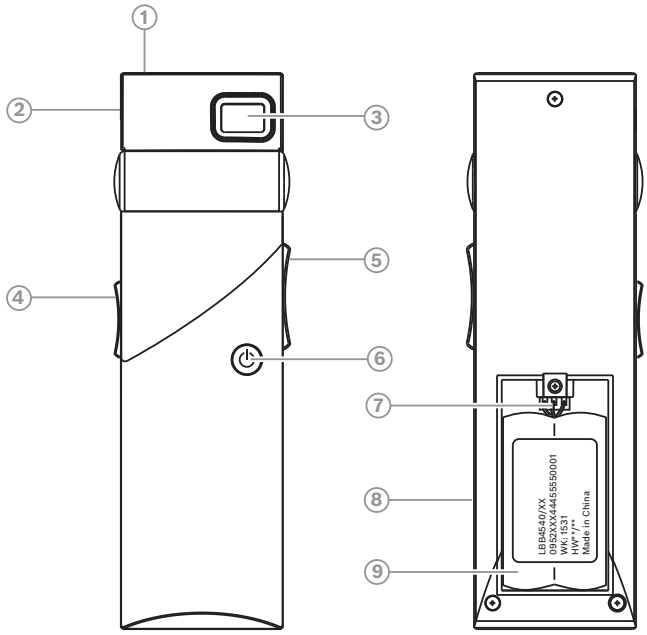

Figure 3.3: Receiver, front view and back view with open battery compartment

1	**Charging indicator LED:** Used in combination with the charging equipment.
2	**Headphone connector:** A 3.5 mm (0.14 inch) stereo jack output socket for the headphone, with integrated Stand-by/Off-switch.
3	**LCD Display**: A two digit display showing the selected channel. An antenna symbol is visible when the receiver picks up an infra red signal of adequate quality. A battery symbol is visible when the battery pack or the batteries are almost empty.
4	**Volume control**: A slider to adjust the volume.
5	**Channel selector**: An up/down switch to select an audio channel. The channel number is shown on the LCD display.
6	**On/Off button**: When a headphone is connected, the receiver switches to Stand-by state. Pressing the On/Off button switches the receiver from Stand-by to On. To switch back to Stand-by, press and hold the button for approx. 2 seconds. When the headphone is removed, the receiver switches automatically to the Off-state.
7	**Battery pack connector**: This connection is used to connect the battery pack to the receiver. Charging is automatically disabled when this connector is not used.
8	**Charging contacts**: Used in combination with the charging equipment to recharge the battery pack (if used)
9	**Battery pack or disposable batteries:** Either a rechargeable NiMH battery pack (LBB4550/10) or two disposable A--size 1.5 V batteries**.**

3.4.1 Normal operation

Connect a headphone for the receiver to operate:

1. Connect a headphone to the receiver.
2. Push the on/off button.
3. Push the volume button up/down to increase/decrease the volume.
4. Push the channel button up/down to select another channel. The highest channel number automatically matches the number of channels that has been set on the transmitter.
5. Push the on/off button for more than 2 seconds to put the receiver manually into standby mode.

The display of the receiver can show:

– The channel number
– A battery symbol when the batteries or the battery pack is almost empty
– An antenna symbol when the signal reception is okay. No antenna symbol when no signal reception.

During short interruptions in the reception, the receiver mutes the headphones output.
In case standby mode is enabled, the receiver automatically switches to standby mode when no adequate IR signal is detected for more than 1 minute (e.g. when a delegate leaves the conference room). When the receiver is in standby mode, press the on button to return to normal operation.

Warning!
When the receiver is not used, disconnect the headphones. This will make sure that the receiver is totally switched off and that no energy is consumed from the batteries or the battery pack.

3.5 Receiver headphones

The headphones connect with the receivers via a 3.5 mm (0.14 inch) stereo jack connector. Suitable headphone types are:

- HDP-SE Single ear headphone
- HDP-LW Lightweight headphones
- Or any other compatible type (see *Technical data, page 59*)

4 Planning

4.1 IR radiation

The Integrus system is based on transmission by modulated infrared radiation. Infrared radiation forms part of the electromagnetic spectrum, which is composed of visible light, radio waves and other types of radiation. It has a wavelength just above that of visible light. Like visible light, it is reflected from hard surfaces, yet passes through translucent materials such as glass. The infrared radiation spectrum in relation to other relevant spectra is shown in the next figure.

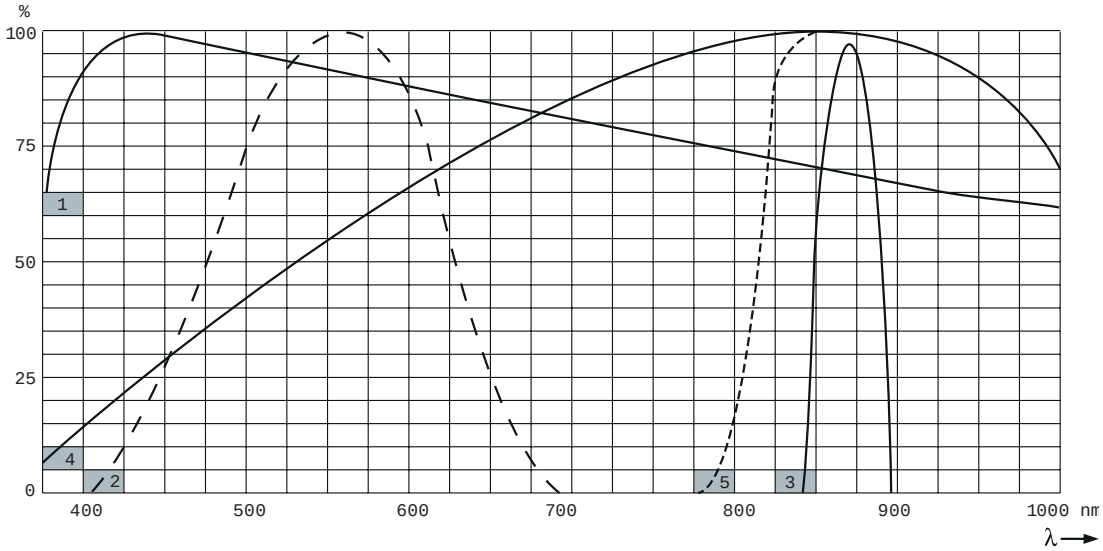

Figure 4.1: Infrared radiation spectrum in relation to other spectra

1	**Daylight spectrum**
2	**Sensitivity of the human eye**
3	**IR radiator**
4	**Sensitivity of IR sensor**
5	**Sensitivity of IR sensor with daylight filter**

4.2 Aspects of Infrared distribution systems

A good infrared distribution system ensures that all delegates in a conference venue receive the distributed signals without disturbance. This is achieved by using enough radiators, placed at well planned positions, so that the conference venue is covered with uniform IR-radiation of adequate strength. There are several aspects that influence the uniformity and quality of the infrared signal, which must be considered when planning an infrared radiation distribution system. These are discussed in the next sections.

4.2.1 Directional sensitivity of the receiver

The sensitivity of a receiver is at its best when it is aimed directly towards a radiator. The axis of maximum sensitivity is tilted upwards at an angle of 45 degrees (see the next figure). Rotating the receiver will decrease the sensitivity. For rotations of less than +/- 45 degrees this effect is not large, but for larger rotations the sensitivity will decrease rapidly.

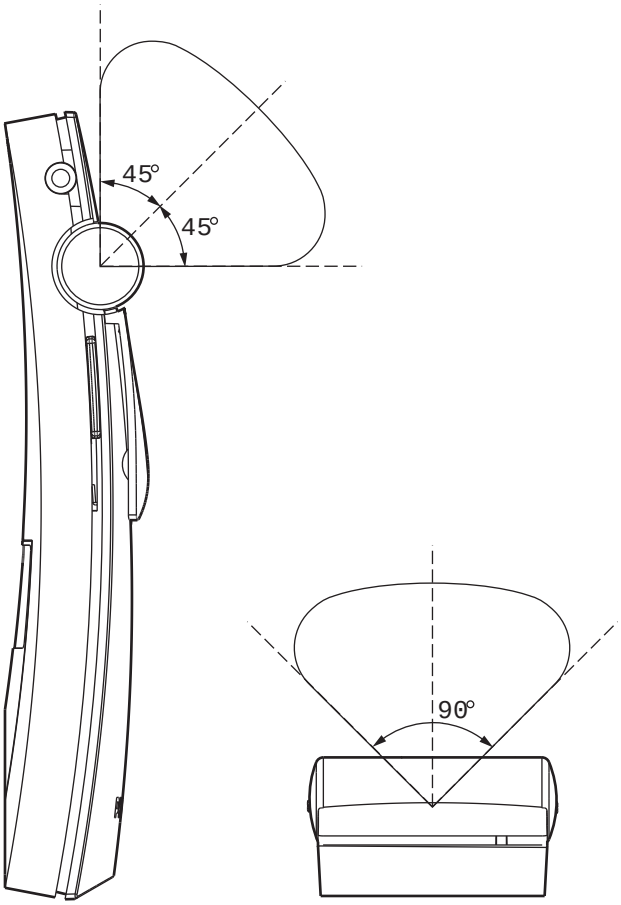

Figure 4.2: Directional characteristics of the receivers

4.2.2 The footprint of the radiator

The coverage area of a radiator depends on the number of transmitted carriers and the output power of the radiator. The coverage area of the LBB 4512/00 radiator is twice as large as the coverage area of the LBB 4511/00. The coverage area can also be doubled by mounting two radiators side by side. The total radiation energy of a radiator is distributed over the transmitted carriers. When more carriers are used, the coverage area gets proportionally smaller. The receiver requires a strength of the IR signal of 4 mW/m^2 per carrier to work without errors (resulting in a 80 dB S/N ratio for the audio channels). The effect of the number of carriers on the coverage area can be seen in the next two figures. The radiation pattern is the area within which the radiation intensity is at least the minimum required signal strength.

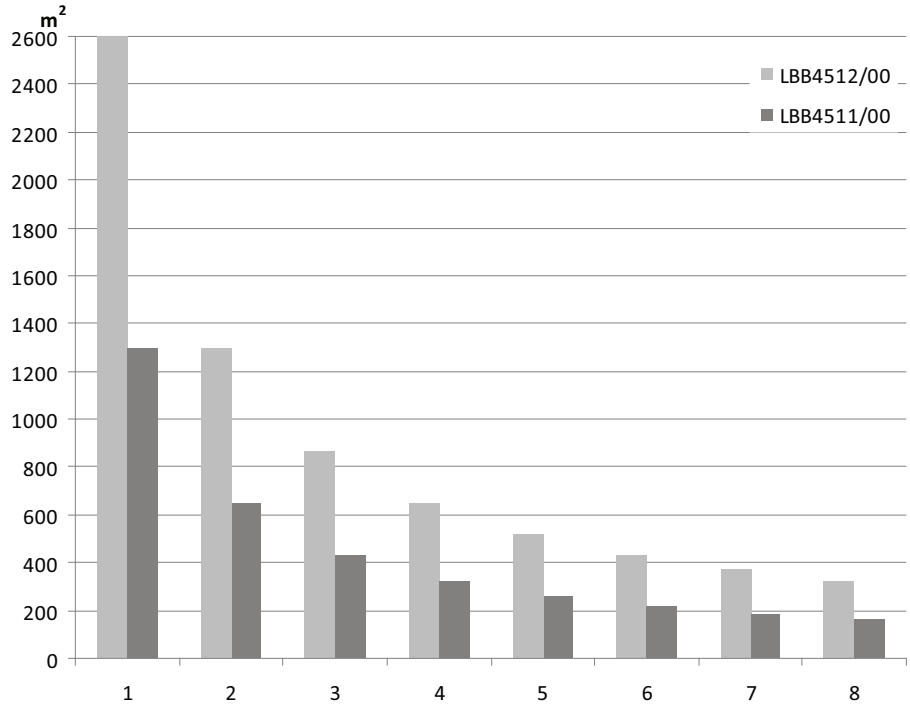

Figure 4.3: Total coverage area of LBB 4511/00 and LBB 4512/00 for 1 to 8 carriers

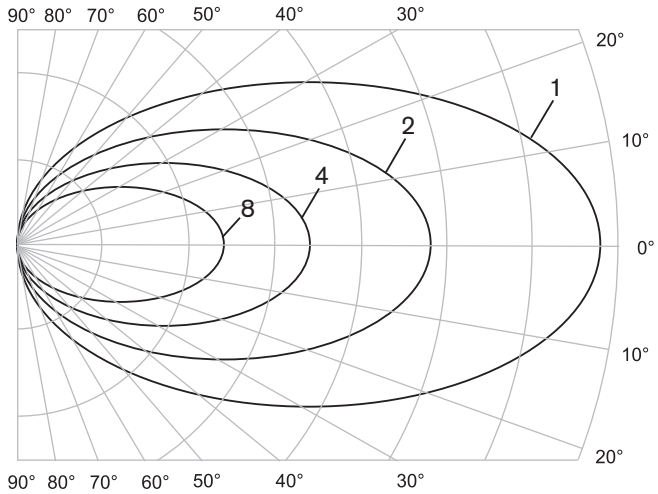

Figure 4.4: Polar diagram of the radiation pattern for 1, 2, 4 and 8 carriers

Footprint

The cross section of the 3-dimensional radiation pattern with the floor of the conference venue is known as the footprint (the white area in the following three figures). This is the floor area in which the direct signal is strong enough to ensure proper reception, when the receiver is directed towards the radiator. As shown, the size and position of the footprint depends on the mounting height and angle of the radiator.

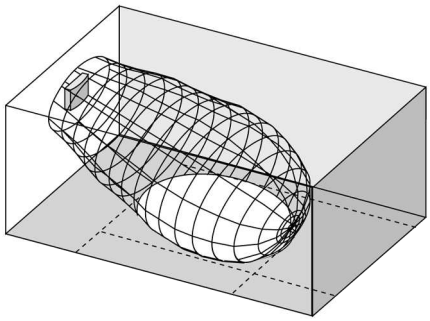

Figure 4.5: The radiator mounted at 15° to the ceiling

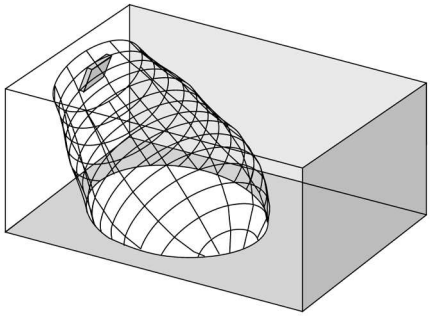

Figure 4.6: The radiator mounted at 45° to the ceiling

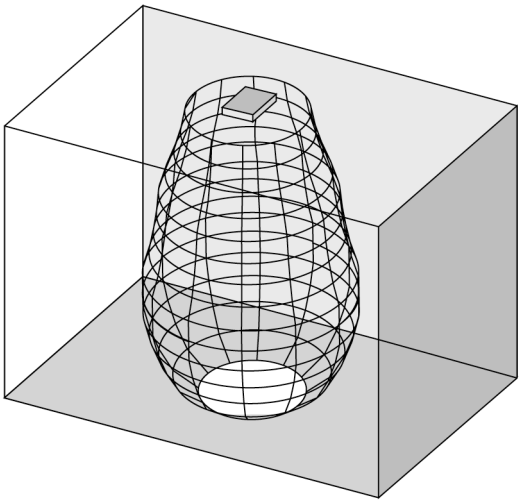

Figure 4.7: The radiator mounted perpendicular (at 90°) to the ceiling

4.2.3 Ambient lighting

The Integrus system is practically immune for the effect of ambient lighting. Fluorescent lamps (with or without electronic ballast or dimming facility), such as TL lamps or energy saving lamps give no problems with the Integrus system. Also sunlight and artificial lighting with incandescent or halogen lamps up to 1000 lux give no problems with the Integrus system. When high levels of artificial lighting with incandescent or halogen lamps, such as

spotlights or stage lighting are applied, you should directly point a radiator at the receivers in order to ensure reliable transmission. For venues containing large, unscreened windows, you must plan on using additional radiators. For events taking place in the open air a site test will be required in order to determine the required amount of radiators. With sufficient radiators installed, the receivers will work without errors, even in bright sunlight.

4.2.4 Objects, surfaces and reflections

The presence of objects in a conference venue can influence the distribution of infrared light. The texture and color of the objects, walls and ceilings also plays an important role. Infrared radiation is reflected from almost all surfaces. As is the case with visible light, smooth, bright or shiny surfaces reflect well. Dark or rough surfaces absorb large proportions of the infrared signal (see the next figure). With few exceptions it cannot pass through materials that are opaque to visible light.

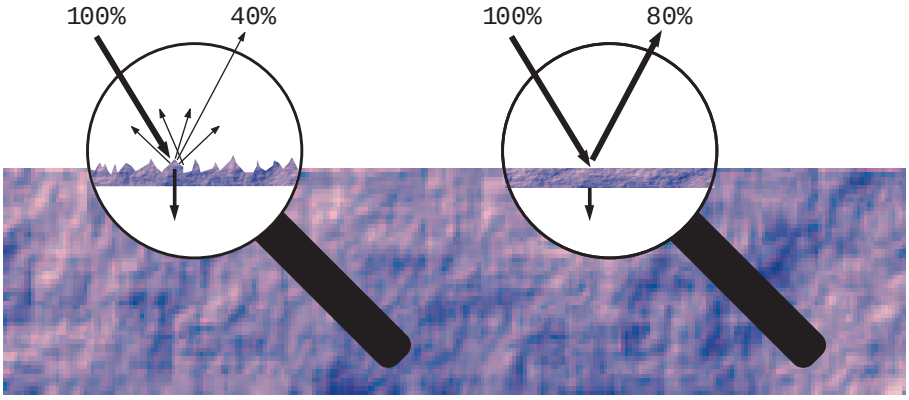

Figure 4.8: The texture of the material determines how much light is reflected and how much is absorbed

Problems caused by shadows from walls or furniture can be solved by ensuring that there are sufficient radiators and that they are well positioned, so that a strong enough infrared field is produced over the whole conference area. Care should be taken not to direct radiators towards uncovered windows, as most of this radiation will subsequently be lost.

4.2.5 Position the radiators

Since infrared radiation can reach a receiver directly and/or via diffused reflections, it is important to take this into account when considering the positioning of the radiators. Though it is best if receivers pick up direct path infrared radiation, reflections improve the signal reception and should therefore not be minimized. Radiators should be positioned high enough not to be blocked by people in the hall (see the next two figures).

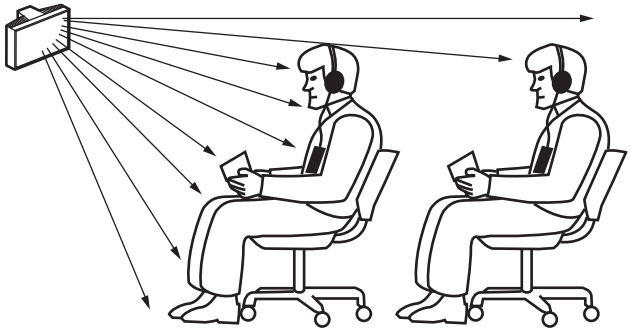

Figure 4.9: Infrared signal blocked by a person in front of the participant

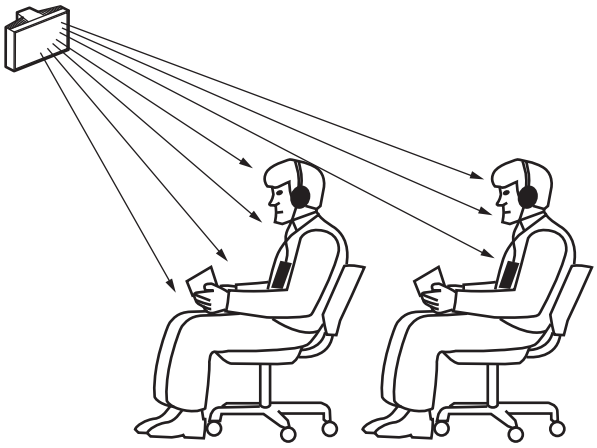

Figure 4.10: Infrared signal not blocked by a person in front of the participant

The figures below illustrate how infrared radiation can be directed to conference participants. In figure 4.12, the participant is situated clear from obstacles and walls, so a combination of direct and diffused radiation can be received. Figure 4.13 shows the signal being reflected from a number of surfaces to the participant.

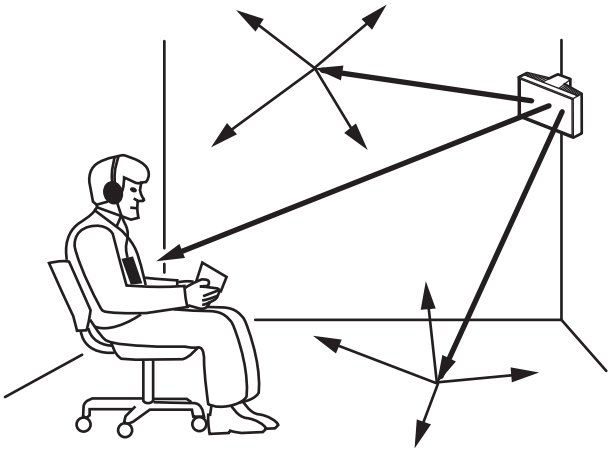

Figure 4.11: Combination of direct and reflected radiation

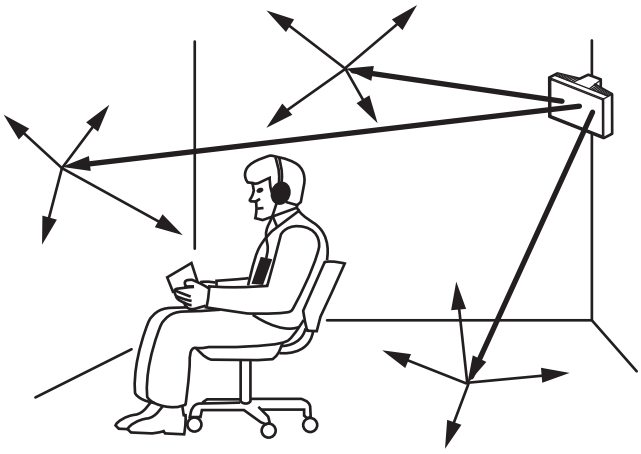

Figure 4.12: Combination of several reflected signals

For concentrically arranged conference rooms, centrally placed, angled radiators located high up can cover the area very efficiently. In rooms with few or no reflecting surfaces, such as a darkened film-projection room, the audience should be covered by direct path infrared

radiation from radiators positioned in front. When the direction of the receiver changes, e.g. with varying seat arrangements, mount the radiators in the corners of the room (see the next figure).

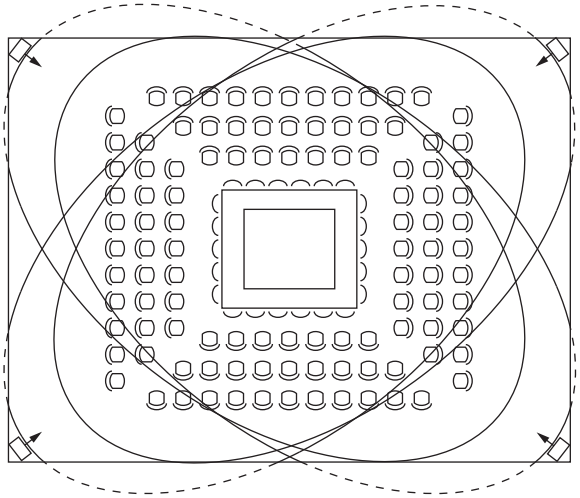

Figure 4.13: Radiator position for covering seats in a square arrangement

If the audience is always directed towards the radiators, you do not need radiators at the back (see the next figure).

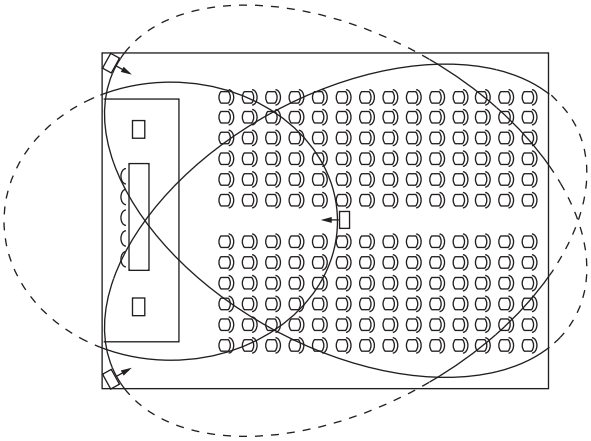

Figure 4.14: Radiator positioning in a conference hall with auditorium seating and podium

If the path of the infrared signals is partially blocked, e.g. under balconies, you should cover the 'shaded' area with an additional radiator (see the next figure).

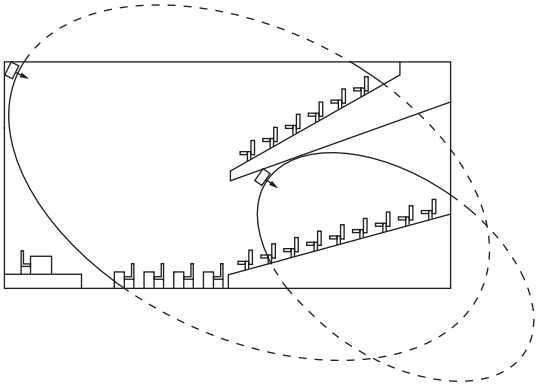

Figure 4.15: Radiator for covering seats beneath a balcony

4.2.6 Overlapping footprints and black spots

When the footprints of two radiators partly overlap, the total coverage area can be larger than the sum of the two separate footprints. In the overlap area the signal radiation power of two radiators are added, which increases the area where the radiation intensity is larger than the required intensity. However, differences in the delays of the signals picked up by the receiver from two or more radiators can result in that the signals cancel each other out (multi path effect). In worst-case situations this can lead to a loss of reception at such positions (black spots).

The next two figures illustrate the effect of overlapping footprints and differences in signal delays.

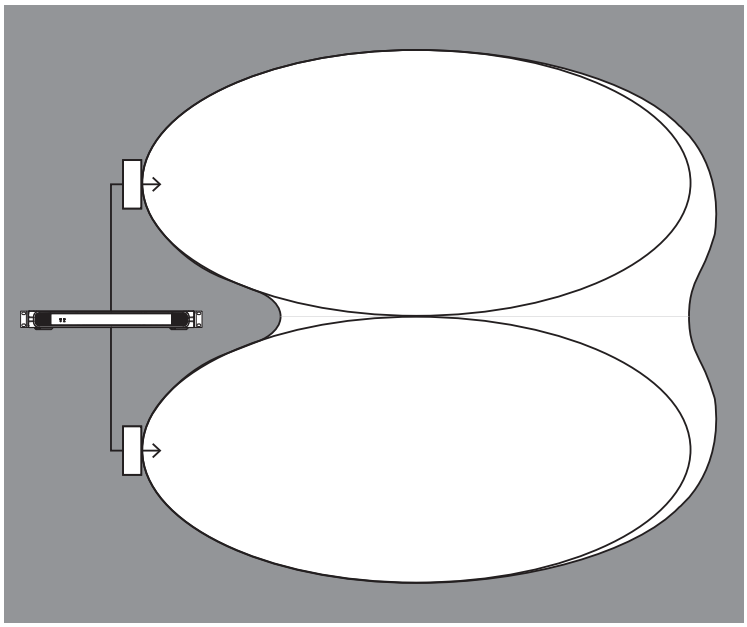

Figure 4.16: Increased coverage area caused by added radiation power

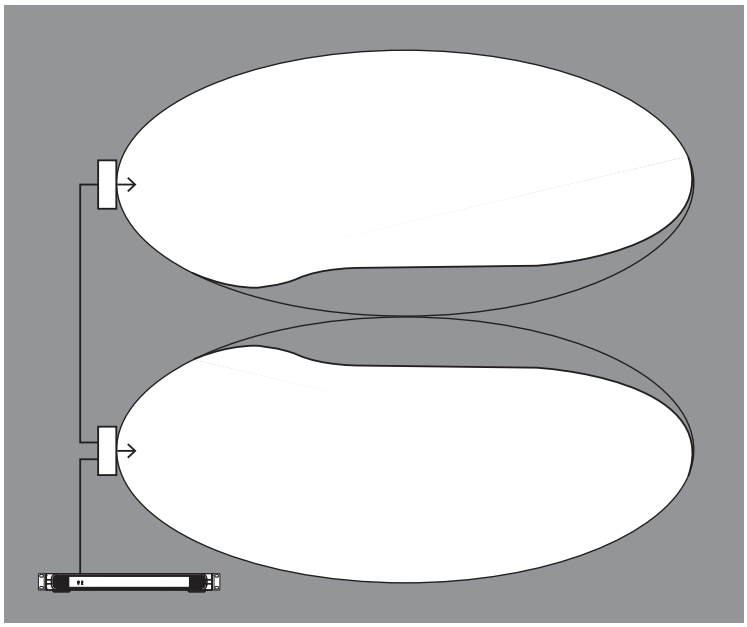

Figure 4.17: Reduced coverage area caused by differences in cable signal delay

The lower the carrier frequency, the less susceptible the receiver is for differences in signal delays. The signal delays can be compensated by using the delay compensation switches on the radiators. Refer to *Determine the radiator delay switch positions, page 48*.

4.3 Plan an Integrus infrared radiation system

4.3.1 Rectangular footprints

Determining the optimal number of infrared radiators required to give 100% coverage of a hall can normally only be done by performing a site test. However, a good estimation can be made by using 'guaranteed rectangular footprints'. Figure 4.19 and 4.20 show what is meant by a rectangular footprint. As can be seen, the rectangular footprint is smaller than the total footprint. Note that in figure 4.20 the 'offset' X is negative because the radiator is actually mounted beyond the horizontal point at which the rectangular footprint starts.

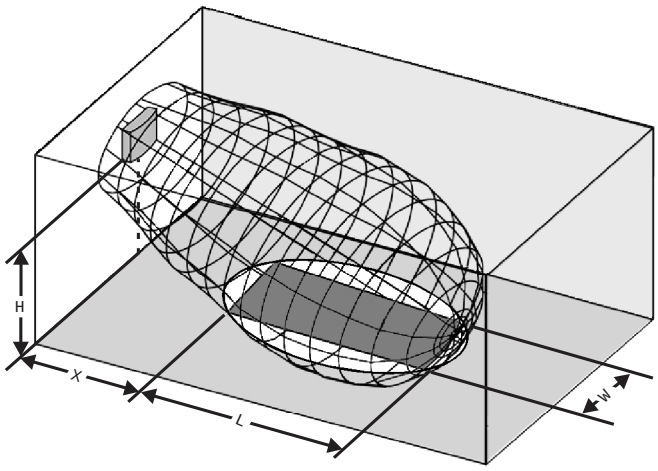

Figure 4.18: A typical rectangular footprint for a mounting angle of 15°

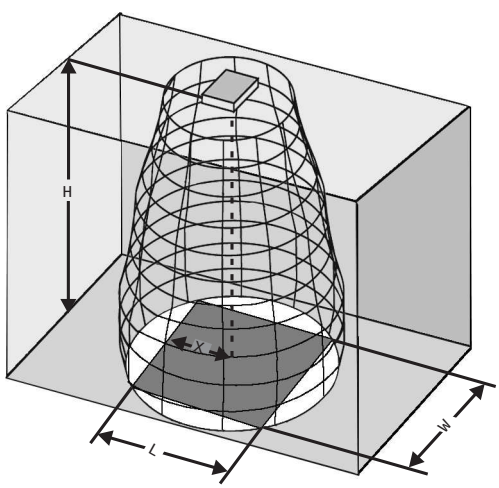

Figure 4.19: A typical rectangular footprint for a mounting angle of 90°

The guaranteed rectangular footprints for various number of carriers, mounting heights and mounting angles can be found in section *Guaranteed rectangular footprints, page 65*. The height is the distance from the reception plane and not from the floor.

Guaranteed rectangular footprints can also be calculated with the footprint calculation tool (available on the documentation DVD). The given values are for one radiator only, and therefore do not take into consideration the beneficial effects of overlapping footprints. The beneficial effects of reflections are also not included. As rule of thumb can be given for systems with up to 4 carriers that if the receiver can pick up the signal of two adjacent radiators, the distance between these radiators can be increased by a factor 1.4 approximately (see the next figure).

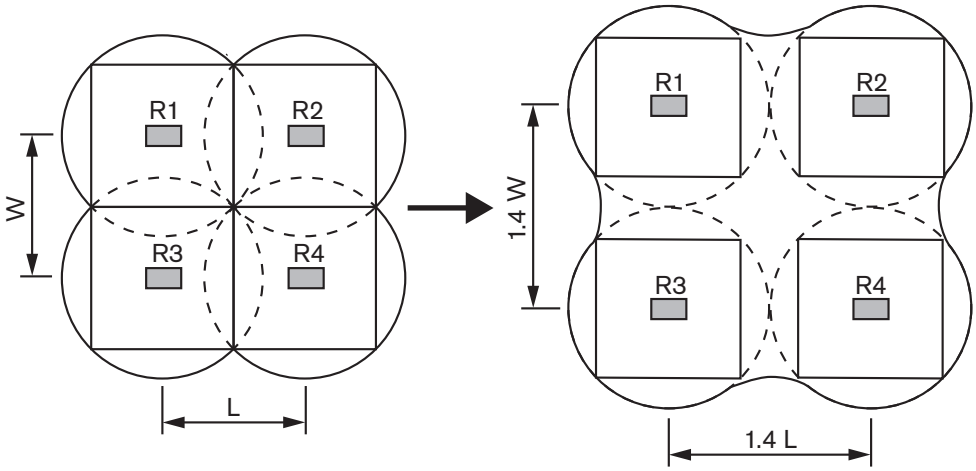

Figure 4.20: The effect of overlapping footprints

4.3.2 Plan radiators

Use the following procedure to plan the radiators:

1. Follow the recommendations in section Aspects of Infrared distribution systems in order to determine the positioning of the radiators.
2. Look up (in the table) or calculate (with the footprint calculation tool) the applicable rectangular footprints.
3. Draw the rectangular footprints in the lay-out of the room.
4. If the receiver can pick up the signal of two adjacent radiators in some areas, determine the overlap effect and draw the footprint enlargement(s) in the lay-out of the room.
5. Check whether you have sufficient coverage with the radiators at the intended positions.
6. If not so, add additional radiators to the room.

See the figures 4.14, 4.15 and 4.16 for examples of a radiator lay out.

4.3.3 Cabling

Signal delay differences can occur due to differences in the cable length from the transmitter to each radiator. In order to minimize the risk of black spots, use equal cable length from transmitter to radiator if possible (see the next figure).

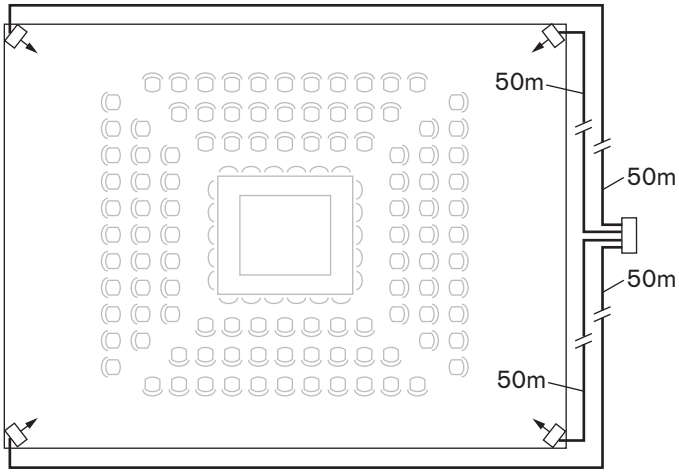

Figure 4.21: Radiators with equal cable length

When radiators are loop-through connected, the cabling between each radiator and the transmitter should be as symmetrical as possible (see the next two figures). The differences in cable signal delays can be compensated with the signal delay compensation switches on the radiators.

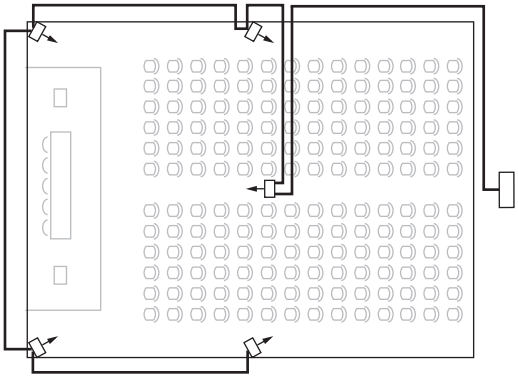

Figure 4.22: Asymmetrical arrangement of radiator cabling (to be avoided)

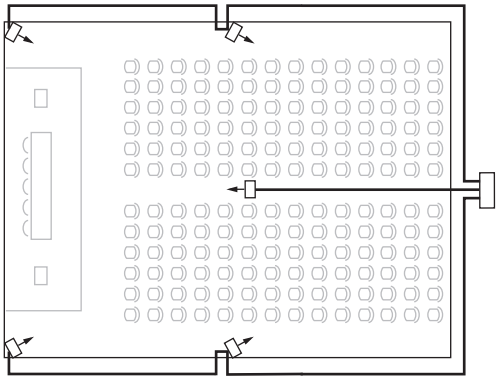

Figure 4.23: Symmetrical arrangement of radiator cabling (recommended)

5 Installation

5.1 Transmitter OMNEO

You can mount the transmitter on a table or on a 19-inch rack:
- Four feet are supplied for table-top use.
- Two mounting brackets are supplied for rack mounting.

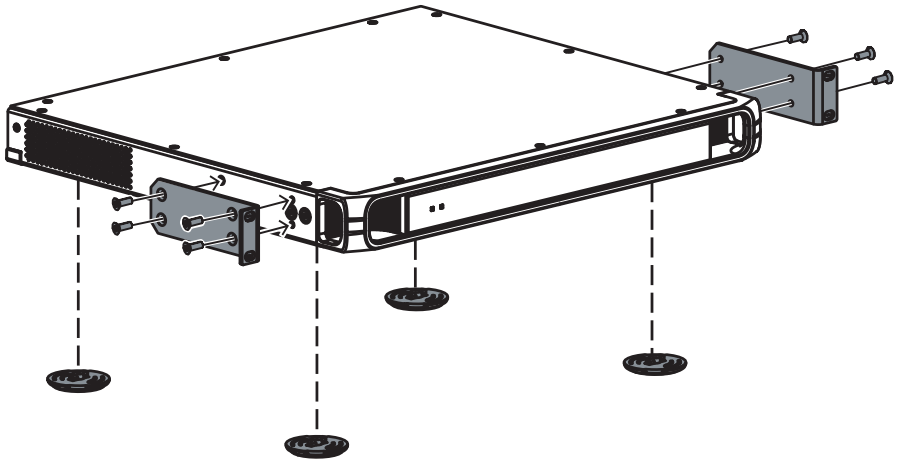

Figure 5.1: INT-TXO with mounting brackets and table-top feet

5.2 Medium and high power radiators

With the suspension bracket supplied with the radiator, radiators in permanent installations can be:
- Fixed to a wall
- Hung under a ceiling or balcony, or
- Secured to any sturdy material.

You can adjust the mounting angle for optimal coverage. The bracket LBB3414/00 is required for wall-mounting. In non-permanent installations, you can use a floor stand.

Warning!
Make sure that the radiator never becomes too hot.
When you install the radiator in the ceiling, keep at least 1 m^3 of free space around the back of the radiator. Make sure that there is a good airflow in this free space.
When determining the position of the radiator, always make sure that the natural airflow is not obstructed. Keep plenty of space around the radiator.

Follow these instructions to mount a radiator:
1. Attach the mounting plate to the suspension bracket. See *Attach mounting plate to the suspension bracket, page 33*
2. Attach the suspension bracket to the radiator. See *Attach the suspension bracket, page 34*
3. Do one of the following:
   - Mount the radiator on a floor stand. See *Mount radiator on a floor stand, page 34*
   - Mount the radiator on a wall. See *Mount radiator on a ceiling, page 36*
   - Mount the radiator on the ceiling. See *Attach mounting plate to the suspension bracket, page 33*

- Mount the radiator on top of a horizontal surface. See *Mount radiator on horizontal surfaces, page 36*

4. Secure the radiator with a safety cord. See Secure the radiator with safety cord.

5.2.1 Attach mounting plate to the suspension bracket

In case of mounting on a floor stand and wall mounting, it is necessary to attach a mounting plate to the suspension bracket.

The place of the mounting plate depends on the intended type of mounting.

- Refer to *Mount radiator on a floor stand, page 34* in case of mounting on a floor stand.
- Refer to *Mount radiator on a wall, page 35* in case of wall mounting.

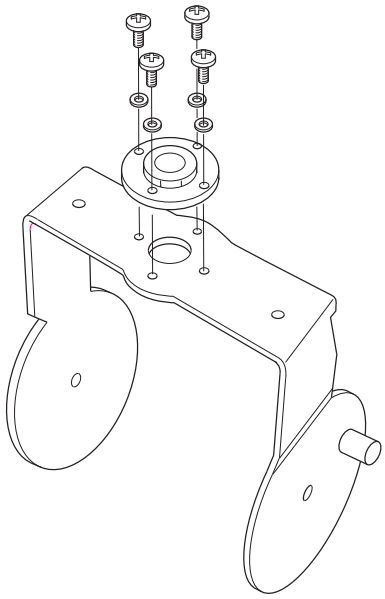

Figure 5.2: Attaching the plate to the suspension bracket in case of mounting on a floor stand

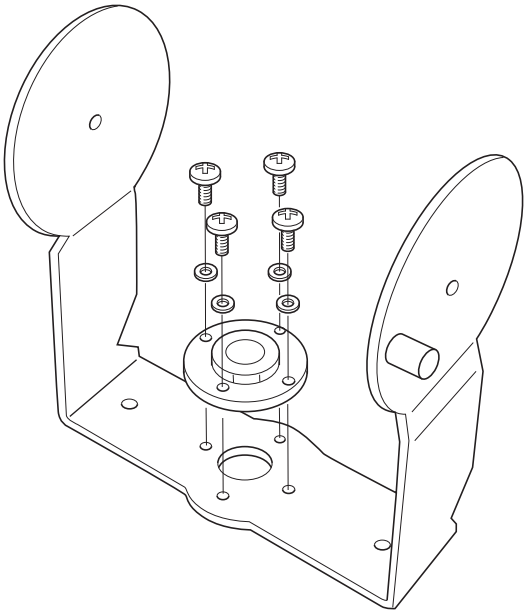

Figure 5.3: Attaching the plate to the suspension bracket in case of wall mounting

5.2.2 Attach the suspension bracket

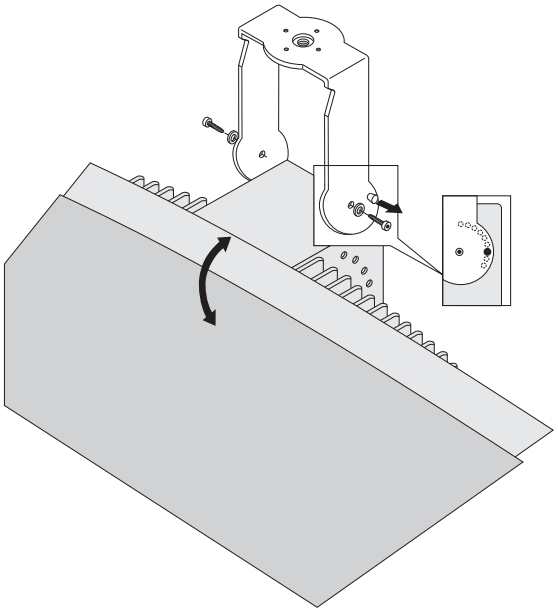

Figure 5.4: Attaching the suspension bracket to the radiator

First assemble the supplied suspension bracket and connect it to the radiator (see section *Attach mounting plate to the suspension bracket, page 33* and the figure above. This bracket is attached to the radiator by two bolts with washers. There are corresponding holes on the back of the radiators. There is also a spring-loaded plunger (indicated by a black arrow in the figure above), located above the bolt hole on the right-hand arm of the bracket, which is used for adjusting the angle of the radiator (shown in inset in the figure above). There are corresponding holes on the back of the radiator for accepting this plunger. The mounting angle can be adjusted in steps of 15°.

5.2.3 Mount radiator on a floor stand

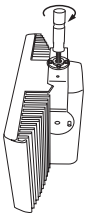

Figure 5.5: Attaching the stud of a floor stand to the suspension bracket of the radiator

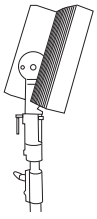

Figure 5.6: Attaching the radiator inclusive suspension bracket and stud to the floor stand

The top of the floor stand is screwed into the suspension bracket (see previous figure). The bracket is supplied with both metric and Whitworth threaded plates, and is therefore compatible with most standard floor stands. For floor stands, the minimum installation height must be 1.80 m, and the mounting angle can be set at 0°, 15° or 30°.

5.2.4 Mount radiator on a wall

For wall mounting, the minimum installation height must be 1.80 m, and an extra wall bracket (LBB 3414/00) is required (must be ordered separately). This bracket is attached to the wall by means of four bolts (see the next figure).

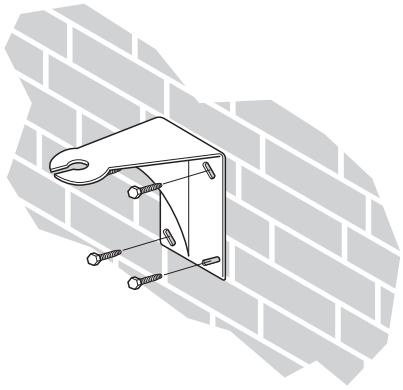

Figure 5.7: Attaching the wall mounting bracket to a wall

Notice!
The four bolts used to attach the bracket must each be able to withstand a pull-out force of 200 kg (440 lb). The bolts and plugs delivered with the LBB 3414/00 wall bracket are only intended for mounting the unit on a solid brick or concrete wall.

Four holes of 10 mm in diameter and 60 mm in depth must be drilled using the drilling pattern (see the next figure).

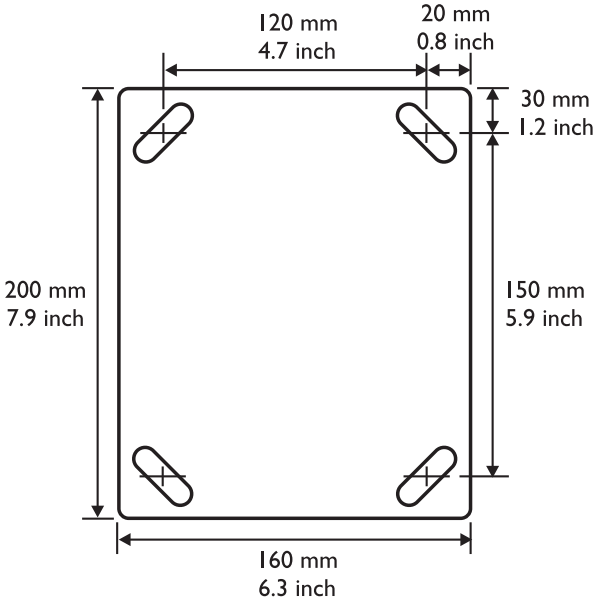

Figure 5.8: LBB 3414/00 wall mounting bracket showing dimensions and drilling pattern

The radiator (plus suspension bracket) is attached to the wall bracket by sliding the mounting bolt over the slot on the wall bracket and then tightening it (see the next figure). A split pin is then inserted into a small hole in the bolt to stop it from working loose (see inset in the next figure).

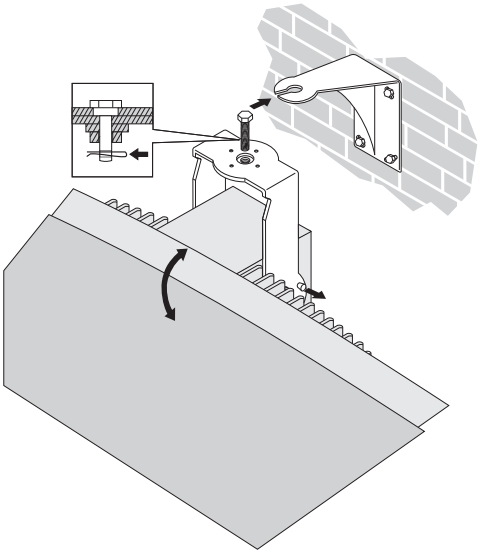

Figure 5.9: Attaching the radiator to the wall mounting bracket

The vertical angle of the radiator can be adjusted between 0 and 90° in steps of 15°. The horizontal orientation of the radiator can be adjusted by loosening the bolt then turning the radiator to the required position.

5.2.5 Mount radiator on a ceiling

The radiators can be attached to the ceiling using the supplied suspension bracket. This ensures enough space for a proper air flow around the radiator. Mounting a radiator in the ceiling will in most cases require a forced air flow by means of a ventilator to prevent overheating. If this is not possible, switch the radiator to half power.

5.2.6 Mount radiator on horizontal surfaces

When the radiator has to be positioned a horizontal surface (e.g. on top of an interpreter booth), the distance between the radiator and the surface must be at least 4 cm (1.5 inch) to enable enough air flow around the radiator. This can be achieved by using the suspension bracket as a support. If this is not possible, switch the radiator to half power. If the radiator is used at full power on top of an interpreter booth, the ambient temperature must not exceed 35° C.

5.2.7 Secure the radiator with a safety cord

The radiator is supplied with a safety eye to secure the radiator with a safety cord (not supplied).

Note: It is mandatory to use the safety cord.

1. Mount the safety eye properly in the hole of the radiator.
   - Make sure that the minimum strength of the safety cord, of the mounting material, of the shackle, and of the supporting building structure can withstand 1.500 N.
   - Make sure that the length of the safety cord is not more than 20 cm longer than needed.
2. Mount the safety cord in the safety eye.

3. Mount the safety cord in the supporting building structure.

Warning!
Only individuals who have a thorough knowledge of the techniques and regulations of rigging objects overhead can suspend any objects. When suspending radiators, always take into account all current national, federal, state and local regulations.
It is the responsibility of the installer to ensure that the radiators are safely installed in accordance with all such regulations. If the radiators are suspended, the installation must inspected at least once a year. Take remedial actions immediately if any sign of weakness or damage is detected.

5.3 Integrus receivers

The infrared receivers can operate with disposable batteries (2x AA-size alkaline cells) or with a rechargeable battery pack (LBB 4550/10).
Insert the batteries or the battery pack in the receiver with the correct polarity as indicated in the battery compartment. The battery pack has a separate connection cable which must be connected to the receiver. When this connection is not present, the charging circuitry in the receiver will not work. This also prevents the unwanted charging of disposable batteries.
The battery pack has a temperature sensor which prevents overheating during charging.
For more information about charging the battery pack see section Integrus Charging Units.

Notice!
Disposable batteries and battery packs at the end of their technical lives should be discarded with due care for the environment. When possible, take batteries to a local recycling station.

5.4 Integrus Charging Units

Mount charging cabinet on a wall
The LBB4560/50 is suitable for wall-mounted use.
It can be wall-mounted using 5 mm (0.19 inch) screws, with a head diameter of 9 mm (0.35 inch). The screws and plugs delivered with the LBB 4560/50 are designed to mount the unit on a solid brick or concrete wall. Two holes, 8 mm in diameter and 55 mm in depth, must be drilled 500 mm apart (see the next figure).

Warning!
To comply with UL and CSA regulations, the charging cabinets must be mounted in such a way that they can be easily removed by hand in case of emergency.

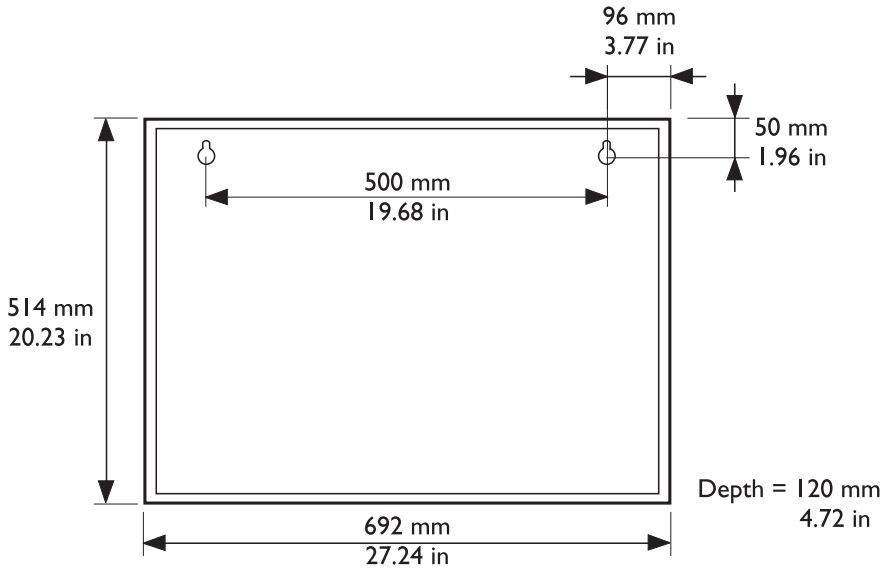

Figure 5.10: Charging cabinet mounting dimensions

Caution!

LBB4560/00 Charger case for 56x LBB4540 - when powered, only use flat on a tabletop.

LBB4560/50 Charger cabinet for 56x LBB4540 - only use when wall-mounted.

6 Connection

This section gives an overview of typical power and system connections using the INT-TXO Transmitter OMNEO.

6.1 Power the Transmitter OMNEO

The INT-TXO can be powered in three different ways:
- Directly to the DICENTIS Conference system
- To a PoE output of a network switch
- To a normal output of a network switch, in which case the adapter will power the transmitter.

Connect to DICENTIS Conference System

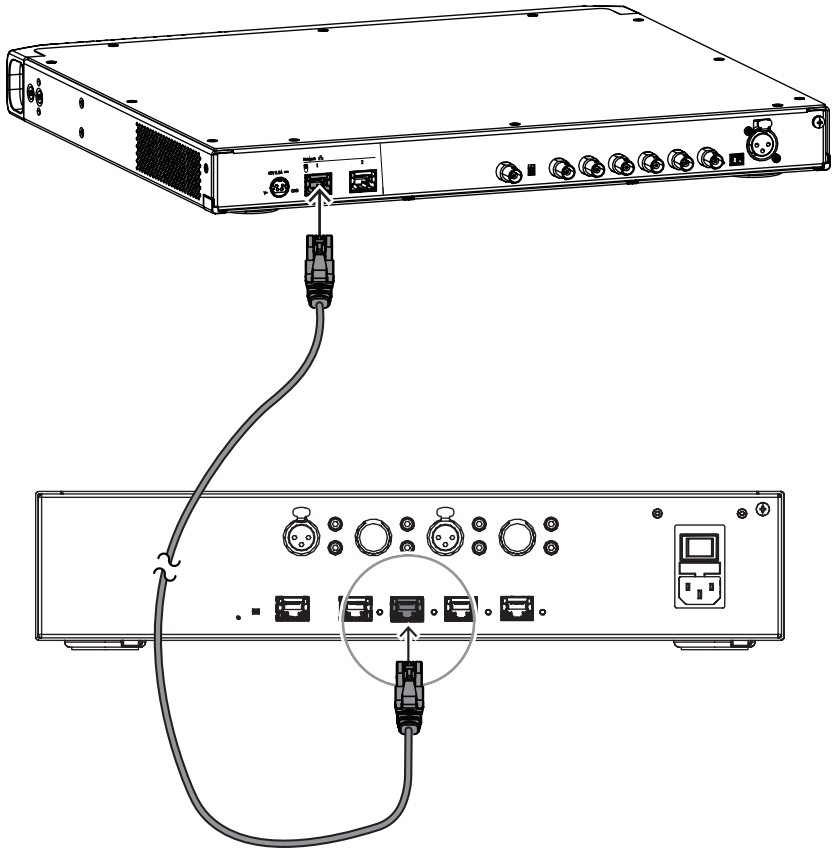

You need to connect the INT-TXO to the high power output of the DCNM-APS2 (Audio processor and powering switch), or of the DCNM-PS2 (Powering switch). Use the other output of the transmitter to connect it to participant devices to optimize the power supply of the switches.

6.2 Connect to another transmitter

The transmitter can be operated in slave mode to loop-through the IR radiator signals from a master transmitter. One of the four radiator outputs of the master transmitter is connected with an RG59 cable to the radiator signal loop-through input of the slave transmitter.

To change the transmission mode of the INT-TXO, set the switch on the back of the INT-TXO to **Slave**.

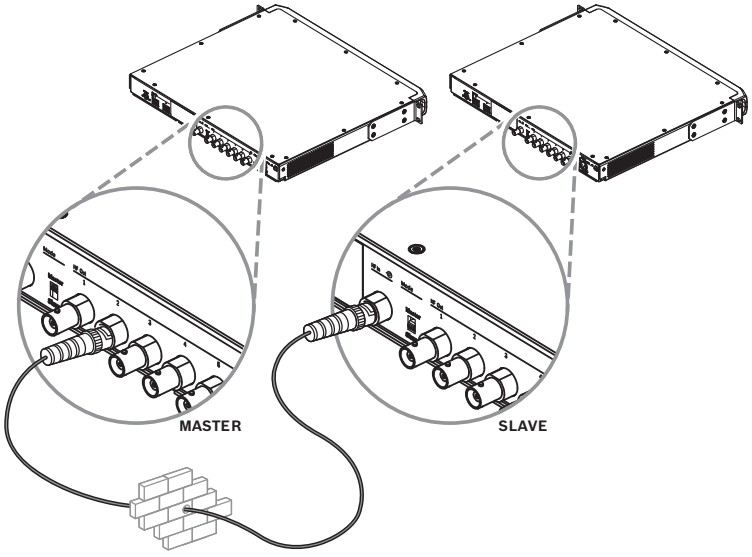

Notice!
The coaxial cable between the master and the slave transmitter cannot be longer than 10 m.

6.3 Connect the radiators

The transmitter has six BNC HF Output connectors labeled 1, 2, 3, 4, 5 and 6 on the rear. All six outputs are functionally identical. They can each drive up to 30 radiators (LBB4511/00 and/or LBB4512/00) in a loop-through configuration. The radiators are connected with RG59 cables. The maximum cable length per output is 900 m (2970 ft) to the last radiator. A built-in switch in the BNC connectors on the radiator allows for automatic cable termination.

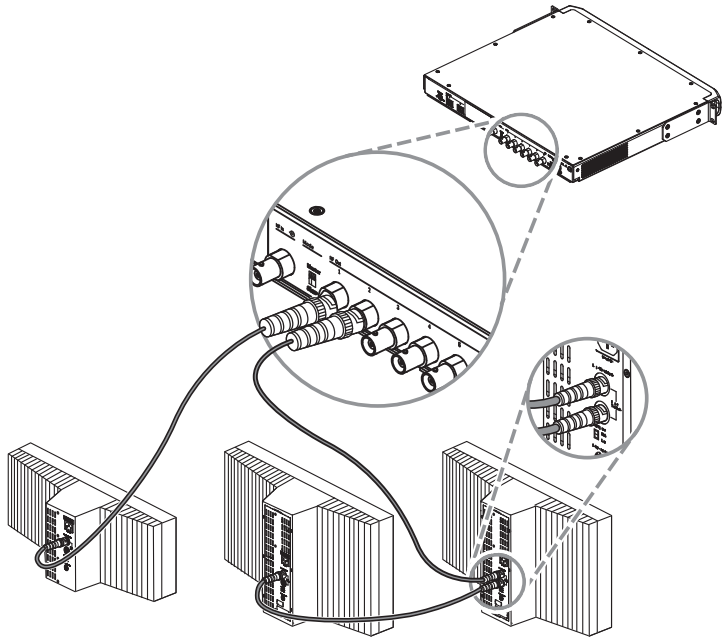

Figure 6.1: Loop-through connection of radiators

Notice!
For the automatic cable termination to work, never leave an open-ended cable connected to the last radiator in a loop-through chain.
When connecting infrared radiators, do not split the cable. Otherwise, the system will not function correctly.

7 System setup

The INT-TXO can operate in three different modes:

- **DICENTIS controlled mode** - This is the default operating mode. The DICENTIS system controls which languages are transmitted through the INT-TXO. You can only manage the carriers.
- **Manually controlled mode** - This mode gives you have more configuration possibilities. You can configure which type of sources you want to transmit, define the settings of the sources, and manage the carriers.
- **Slave mode** - In this mode, the INT-TXO acts as a repeater of a master INT-TXO. No configuration is required.

In the DICENTIS controlled and Manually controlled operating modes, the INT-TXO supports four sources (input channels) when it is out of the box:

- To increase the number of sources you need to add INT-L1AL licenses
- Each INT-L1AL license increases the number of sources by one

The number of sources that the INT-TXO can transmit depends on:

- The number of INT-L1AL licenses
- The carrier management:
  - The INT-TXO has eight carriers available
  - Each carrier allocates four output channels
- The settings of the sources

7.1 DICENTIS controlled mode

In the DICENTIS controlled mode, the INT-TXO can support up to 32 DICENTIS sources: the floor plus 31 interpretations.
To increase the number of sources, you need to add INT-L1AL licenses.
The audio quality is always set to standard and the audio mode is always set to mono. It is not possible to change these settings.
It is possible to enable and disable carriers in the **Carrier Management** section of the INT-TXO web page.

Each source consumes one output channel, which means that one carrier is able to host four DICENTIS sources.
If we add 28 INT-L1AL licenses to the INT-TXO, the device supports 32 sources. By distributing these 32 sources across the eight carriers, it is possible to allocate four sources in each carrier, which results in a total of 32 DICENTIS sources.

Number of available carriers	Maximum number of DICENTIS input channels/ sources	Required number of licenses
8	32	28*

*One INT-L1AL license is required per additional source (input channel).

The source configuration is the same as in the DICENTIS system: The Floor is transmitted through output channel 0 and the interpretations are transmitted through the remaining output channels. If you need to transmit more than 31 interpretations, you must switch to **Manually controlled** mode.

7.2 Manually controlled mode

If the operation mode of the INT-TXO is set to **Manually controlled**, the device can support up to 32 channels, which can consist of:

- Only DICENTIS sources
- Only Dante sources
- A combination of DICENTIS and Dante sources

To increase the number of sources, you need to add INT-L1AL licenses.

Setting the audio quality

The audio quality of the DICENTIS and Dante sources can be set to standard or premium. This setting applies to all sources. The INT-TXO does not support multiple audio quality settings simultaneously.

Setting the audio quality from standard to premium decreases the number of available carriers by half because it consumes double the infrared bandwidth. This means the number of output channels also decreases by half.

Note: This setting does not influence the number of INT-L1AL licenses required to add an extra source. Only one license is required per premium source. A stereo premium source requires two licenses, but this is because of the audio mode.

Setting the audio mode

You can set the audio mode of the Dante sources to mono or stereo. It is possible to have some Dante sources set to mono and other Dante sources set to stereo, because this setting is defined individually in each source.

Each stereo source, whether it is standard or premium, requires two INT-L1AL licenses.

Note: The DICENTIS sources are set mono and this setting cannot be changed.

How to create a setup in Manually controlled mode

The number of available sources depends on the number of INT-L1AL licenses added, as well as on the settings of the sources and the carrier consumption management.

Dividing each carrier into four output channels (1, 2, 3 and 4) enables us to understand how it is possible to distribute the sources across the carriers:

Audio quality / mode of the source	Number of output channels the source consumes	Carrier consumption	Output channels available to host the source	Number of licenses required per source
Standard / mono	1	¼	1, 2, 3 or 4	1
Standard / stereo	2	½	1+2 or 3+4	2
Premium / mono	2	½	1+2 or 3+4	1
Premium / stereo	4	1	1+2+3+4	2

Note: Only the allocations presented in the table above are possible. You cannot allocate a standard stereo source in output channels 2+3, for example.

If you add 28 INT-L1AL licenses to the INT-TXO, the device supports 32 sources (input channels) in total. It is possible to create multiple setups in this case, depending on how you configure the sources. For example, the following setups are possible:

- 32 standard mono channels
- 16 standard stereo channels
- 16 premium mono channels
- 8 premium stereo channels

7.3 Slave mode

The INT-TXO can be switched to the slave mode to act as a repeater of another INT-TXO. In this case, the signal is received through the coaxial input and synchronizes with the master INT-TXO. The slave mode is enabled through a switch on the rear of the device.
In this operation mode, the INT-TXO does not require any configuration nor additional licenses. It replicates the data and the settings of the master INT-TXO.
The slave mode needs to be used when the radiators of multiple transmitters are in the same room due to the synchronization of the data.

8 Configuration

8.1 Transmitter OMNEO

The first time you login to the INT-TXO, you need to have physical access to the Master/Slave switch in the back of the transmitter. This will allow you to set the administrator password and enable the network access.

1. Enter https://int-txo.local in the web-browser.
   – The **First time login** page opens.
2. Follow the instructions shown and flip the Master/Slave switch back and forth.
3. Within the next 5 minutes, enter a password for the administrator in the **Password** field.
4. In the **Confirm password** field, enter your password.
5. Click **OK**.
   – You have now access to the network and are able login.

Use the icons in the top bar of the INT-TXO website to select the desired language, switch between the dark and light modes, and log out of the page.
In the left column, navigate through the different tabs to configure the INT-TXO.

8.1.1 Status Dashboard

This page provides an overview of the different INT-TXO settings, as well as of other system components. Here, you can reboot the INT-TXO, set it to Test mode and Standby mode.
In the **System info** section, click the **Logging** button to export a file containing the log of events that occur in the system.
To see only new events, press **Clear** to clear the log display. This does not remove the prior events from the device. You can still export them.

8.1.2 Audio Configuration

In this page, you can check the configuration of the sources (input channels). The numbers that appear on top of the slots correspond to the channel numbers available for the person using the receiver.
The AUX slot corresponds to the analog input, which you can activate by using the toggle switch.
If the INT-TXO is in Manually controlled mode, you can adjust the audio sensitivity to align the audio level of the sources. For this, use the gain control buttons and sliders available for each source. You can also mute the sources, as required.

8.1.3 Carrier Management

This page allows you to manage the carriers. The management possibilities depend on the operating mode of the INT-TXO. You need to click the **Edit** button before editing the carrier configuration.
In DICENTIS controlled mode, you can:
– Enable and disable carriers using the checkboxes below the carrier numbers
In Manually controlled mode, you can:
– Set the audio quality using the button on the upper right corner of the page
– Set the number of transmitted languages/channels
– Enable and disable carriers using the checkboxes below the carrier numbers
– Set the audio mode and the source type of the output channels
– Define which DICENTIS and Dante sources are transmitted:

- After setting a source as DICENTIS, go to the Meeting Application and choose which source you want to transmit. Select the corresponding source number in the INT-TXO web page. This functionality allows you to choose which languages to transmit.
- After setting a source as Dante, go to the Dante Controller and select the Dante source(s) you wish to transmit. After this, the corresponding source number(s) appear in the INT-TXO web page.

Turn the receivers on and off to load the new data when you change the carriers.
To power off the receivers, set the INT-TXO to standby mode. That in turn will set the radiators also to standby mode. After approximately 30 seconds, the receivers will turn off automatically. When you turn on the receiver, the new configuration is automatically uploaded.

Notice!
Do not modify the carrier management during a meeting.

8.1.4 Network Settings

This page provides information on the network settings of the INT-TXO.
If the device is in DICENTIS controlled mode, the IP address is set automatically.
If the device is in Manually controlled mode, the IP address needs to be set manually. Click on **Edit** to fill in the fields with the network data. After you enter the required information, click on **Apply**.
Note: You can change the hostname to a more logical name, such as the name of the room, to find it more easily on the network.

8.1.5 General Settings

In this page, you can configure general settings of the INT-TXO.
Here, you can reboot the INT-TXO, set it to DICENTIS controlled mode, Manually controlled mode, Test mode and Standby mode.
Under the **TXO time** section, press the **Sync to PC** button to synchronize the time of the INT-TXO with the time of the PC from which you run the browser.
Under the **System logging** section, press the **Logs** button to export a file containing the log of events that occur in the system.
To see only new events, press **Clear** to clear the log display. This does not remove the prior events from the device. You can still export them.
Under the **Configuration** section, press **Import** to import an existing configuration or **Export** if you want to export the current configuration settings.
Under the **Factory reset** section, you can **Reset** the INT-TXO to its default settings. Resetting the device does not remove the added licenses.

8.1.6 Licensing

In this page, you can register your system and add INT-L1AL licenses. The INT-L1AL licenses can only be added after registering the system.

8.1.6.1 Register the INTEGRUS system

To register the INTEGRUS system:
1. In the Licensing page, enter the required data.
2. Click **+ Add** and then **Register**.
3. Click **Download Request File** to download the request.bin file.

4. Click **Go to License Website** to go to the System Activation Site.
5. In the System Activation Site, go to the Manage License page and upload the downloaded file.
6. Click **Choose file** to upload the downloaded file and then click **Process**.
7. Download the generated license.bin file.
8. Return to the Licensing page in the INT-TXO website and click **Choose file** to upload the license.bin file.
9. Click **Register** to complete the process.

After completing the registration process, the Licensing page changes and allows you to manage the additional INT-L1AL licenses.

8.1.6.2 Activate INT-L1AL licenses

To activate INT-L1AL licenses:

1. In the Licensing page, click **Manage Licenses**. This takes you to the System Activation Site.
2. In the System Activation Site, go to the Manage devices page.
3. Select the desired device and click **Add Licenses**.
4. Select the licenses you wish to activate and press **OK**.
5. Click **Download license file**.
6. Return to the Licensing page in the INT-TXO website and click **Process License file**.
7. Click **Choose file** and select the downloaded license file.
8. Click **Process** to complete the process.

8.1.6.3 Return INT-L1AL licenses

To return INT-L1AL licenses:

1. In the Licensing page, click **Manage Licenses**. This takes you to the System Activation Site.
2. In the System Activation Site, go to the Manage devices page.
3. Select the desired device and click **Return licenses**.
4. Select the licenses you wish to return and press **OK**.
5. Click **Download license file**.
6. Return to the Licensing page in the INT-TXO website and click **Process License file**.
7. Click **Choose file** and select the downloaded license file.
8. Click **Process** to complete the process.

8.1.7 User Management

In this page, a technician can manage the users of the INT-TXO.

To create a new user:

1. Press **+ New User**.
2. Enter the required data for the new user.

The **Operator** user role only has viewing rights, while the **Technician** user role has configuration and control rights.

Note: The technicians can delete all users except for themselves.

8.2 Integrus Radiators

8.2.1 Set the output power selection switch

The radiators can be switched to half power. This can be used when full power is not required, e.g. when a mobile system is used in a small conference venue.
Also switch a radiator to half power when an adequate air flow can not be guaranteed, e.g. when the radiator is mounted on top of an interpreters booth.
Reducing the power when possible saves energy and increases the lifetime.
When a radiator is in half power mode, half the number of IREDs are switched off, which results in a visible pattern as shown in the next figure.

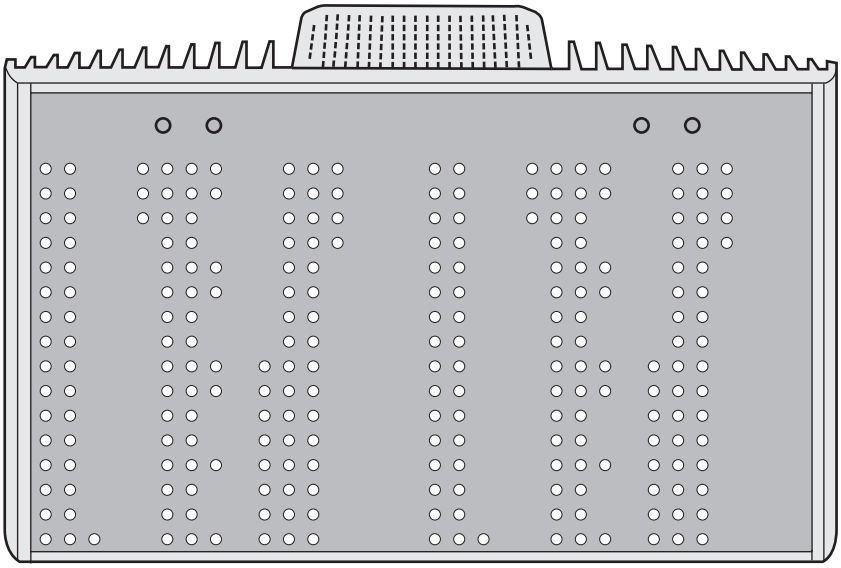

Figure 8.1: IRED pattern of radiator in half power mode.

8.2.2 Set the delay switches

Refer to Determine the radiator delay switch positions how to determine the radiator delay switch positions.

Caution!
Turn the delay switches carefully to a new position until you feel that it clicks into position, to prevent that a switch is positioned between two numbers, which would result in a wrong delay setting.

8.3 Determine the radiator delay switch positions

As described in the section Overlapping footprints and black spots, differences in the delays of the signals picked up by the receiver from two or more radiators can cause black spots. This happens as a result of the multi path effect.
The signals picked up by the receiver are delayed by:

- Cable signal delay: The transmission from the transmitter to the radiator through the cable
- Radiation signal delay: The transmission from the radiator to the receiver through the air

– For systems with two or more transmitters: the transmission through the slave transmitter(s).

To compensate the signal delay differences, you can increase the delay of each radiator. Set these signal delays with the delay switches at the back of the radiator.
To determine the cable signal, you can:
– Measure the cable lengths, or
– Measure the impulse response time with a delay measurement tool.

In both cases, the cable signal delays can be calculated manually and with the delay switch calculation tool available at www.boschsecurity.com.
It is not necessary to calculate the cable signal delay when:
– The radiators are directly connected to the transmitter with an equal cable length
– The radiators are connected in a loop, but with less than 5 m distance between the first and last radiator in a trunk, and with an equal cable length between the first radiator in each trunk and the transmitter.

In these cases, set the delay switches on all radiators to zero and determine whether to compensate for radiation signal delay. See section *Systems with more than 4 carriers and a radiator under a balcony, page 54*.

The next sections describe how to calculate the delay switch positions manually for systems with one transmitter, or two or more transmitters. See the delay switch calculation tool for the procedures on how to calculate the delay switch positions automatically.

Warning!
The calculation tool to measure the delay switch eases the calculation of the delay switch positions.

8.3.1 System with one transmitter

There are two ways to determine the delay switch positions:
– Measuring the cable lengths
– Using a delay measuring tool
Both methods are described in the next sections.

Notice!
For systems with a cable length difference of more than 50 meters, it is recommended to use a measurement tool to determine the delay differences in order to calculate the delay switch positions.

Determining delay switch positions by measuring the cable lengths
Use the following procedure to determine the delay switch position based on cable lengths:
1. Look up the cable signal delay per meter of the used cable. The manufacturer specifies this factor.
2. Measure the lengths of the cables between the transmitter and each radiator.
3. Multiply the lengths of the cables between the transmitter and each radiator with the cable signal delay per meter. These are the cable signal delays for each radiator.

4. Determine the maximum signal delay.
5. Calculate for each radiator the signal delay difference with the maximum signal delay.
6. Divide the signal delay difference by 33. The rounded off figure is the signal delay switch position for that radiator.
7. Add delay switch positions for radiators under a balcony, if applicable (see section *Systems with more than 4 carriers and a radiator under a balcony, page 54*).
8. Set the delay switches to the calculated switch positions.

The next figure and table illustrate the calculation of the cable signal delay.

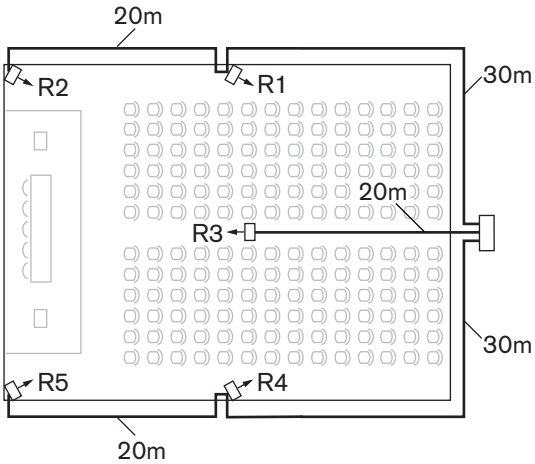

Figure 8.2: System with five radiators and measured cable lengths

Radiator number	Total cable length [m]	Cable signal delay per meter [ns/m]	Cable signal delay [ns]	Signal delay difference [ns]	Delay switch position
1	30	5.6*	30*5.6 = 168	280-168=112	112/33=3.39=3
2	30+20=50	5.6*	50*5.6 = 168	280-208=0	0/33=0
3	20	5.6*	20*5.6 = 168	280-112=168	168/33=50.9=5
4	30	5.6*	30*5.6 = 168	280-168=112	112/33=3.39=3
5	30+20=50	5.6*	50*5.6 = 168	280-280=0	0/33=0

Table 8.1: Calculation of the cable signal delays

Notice!
*The used cable signal delay per meter is an example. Use the actual signal delay per meter in this calculation as specified by the manufacturer.

Determining delay switch positions by using a delay measuring tool

The most accurate way to determine the cable signal delays is to measure the actual signal delay for each radiator as described in the following procedure:

1. Disconnect the cable from a radiator output of the transmitter and connect this to a delay measurement tool.
2. Disconnect a radiator from this cable.
3. Measure the impulse response time (in ns) of the cable(s) between the transmitter and the radiator.

4. Reconnect the cable to the radiator and repeat steps 2 to 4 for the other radiators that are connected to the same transmitter output.
5. Reconnect the cable t the transmitter and repeat step 1 to 5 for the other radiator outputs of the transmitter.
6. Divide the impulse response times for each radiator by two. These are the cable signal delays for each radiator.
7. Determine the maximum signal delay.
8. Calculate for each radiator the signal delay difference with the maximum signal delay.
9. Divide the signal delay difference by 33. The rounded off figure is the delay switch position for that radiator.
10. Add delay switch positions to radiators under a balcony, if applicable (see section *Systems with more than 4 carriers and a radiator under a balcony, page 54*)
11. Set the delay switches to the calculated delay switch positions.

Caution!
Turn the delay switches carefully to a new position until you feel that it clicks into position, to prevent that a switch is positioned between two numbers, which would result in a wrong delay setting.

The next figure and table illustrate the calculation of the signal delays and the delay switch positions.

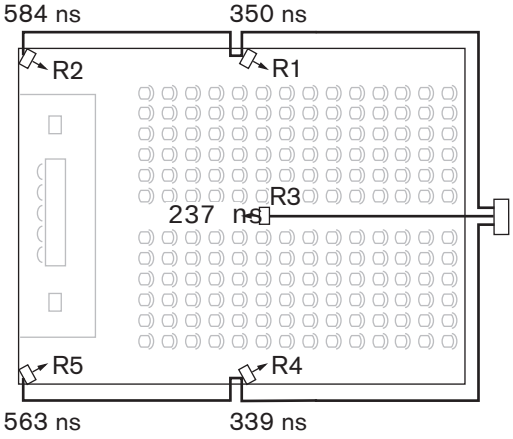

Figure 8.3: System with five radiators and measured impulse response times

Radiator number	Impulse response time [ns]	Cable signal delay [ns]	Signal delay difference [ns]	Delay switch position
1	350	350/2=175	292-175=117	117/33=3.64=4
2	584	584/2=292	292-292=0	0/33=0
3	237	237/2=118	292-118=174	174/33=5.27=5
4	339	339/2=169	292-169=123	123/33=3.73=4
5	563	573/2=281	292-281=11	11/33=0.33=0

Table 8.2: Calculation of the delay switch positions of a system with one transmitter

Notice!
The calculated delay switch positions based on impulse response time can differ from the calculated delay switch positions based on cable lengths. This is caused by the accuracy of the measurements and the accuracy of the cable signal delay factor per meter as specified by the manufacturer of the cable. If the impulse response time is measured correctly, the calculated delay switch positions will be the most accurate.

8.3.2 System with two or more transmitters in one room

When radiators in one multi purpose room are connected to two transmitters, an extra signal delay is added by:

– Transmission from master transmitter to slave transmitter (cable signal delay).
– Transmission through the slave transmitter.

Use the following procedure to determine the delay switch positions in a master-slave configuration:

1. Calculate the cable signal delay for each radiator, using the procedures for a system with one transmitter.
2. Calculate the signal delay of the cable between the master and the slave transmitter in the same way as for cables between a transmitter and a radiator.
3. Add to the cable signal delay of the cable between the master and the slave, the delay of the slave transmitter itself: 33 ns. This gives the master-to-slave signal delay.
4. Add the master-to-slave signal delay to each radiator connected to the slave transmitter.
5. Determine the maximum signal delay.
6. Calculate for each radiator the signal delay difference with the maximum signal delay.
7. Divide the signal delay difference by 33. The rounded off figure is the signal delay switch position for that radiator.
8. Add delay switch positions to radiators under a balcony, if applicable (see section *Systems with more than 4 carriers and a radiator under a balcony, page 54*)
9. Set the delay switches to the calculated delay switch positions.

Caution!
Turn the delay switches carefully to a new position until you feel that it clicks into position, to prevent that a switch is positioned between two numbers, which would result in a wrong delay setting.

Notice!
When a master-slave configuration is used for rooms which are always separated, the delay switch positions can be determined per system and the delay caused by transmission from master to slave transmitter can be ignored.

The next figure and tables and table 7.1 illustrate the calculation of the extra master-slave signal delay.

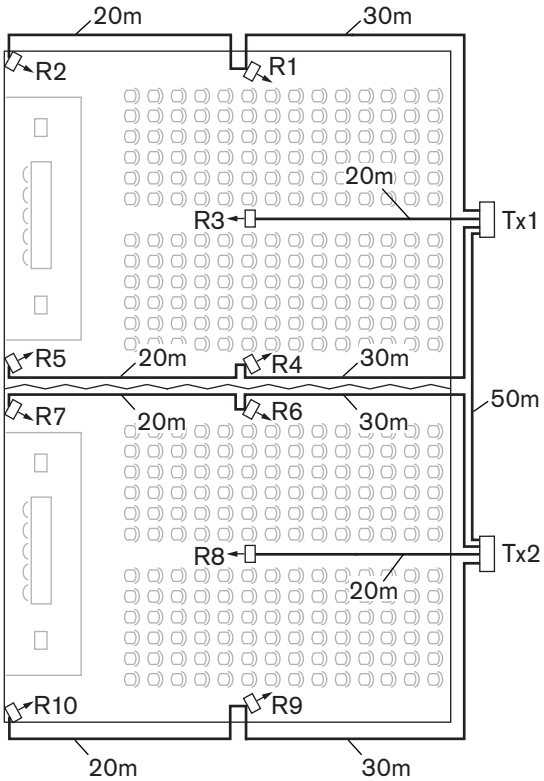

Figure 8.4: System with master and slave transmitter in multi purpose room

Cable length master-slave transmitter [m]	Cable signal delay per meter [ns/m]	Cable signal delay [ns]	Signal delay slave transmitter [ns]	Master-to-slave signal delay [ns]
50	5.6	50x5.6=280	33	280+33=313

Table 8.3: Calculation of the master-to-slave signal delays

Radiator number	Trans-mitter	Master-to-slave signal delay [ns]	Cable signal delay [ns]	Total signal delay [ns]	Signal delay difference [ns]	Delay switch position
1	Master	0	168	0+168=168	593-168=425	425/33=12.88=13
2	Master	0	280	0+280=280	593-280=313	313/33=9.48=9
3	Master	0	112	0+112=112	593-112=481	481/33=14.58=15
4	Master	0	168	0+168=168	593-168=425	425/33=12.88=13
5	Master	0	280	0+280=280	593-280=313	313/33=9.48=9
6	Slave	313	168	313+168=481	593-481=112	112/33=3.39=3
7	Slave	313	280	313+280=593	593-593=0	0/33=0
8	Slave	313	112	313+112=425	593-425=168	168/33=5.09=5
9	Slave	313	168	313+168=481	593-481=112	112/33=3.39=3

Radiator number	Trans-mitter	Master-to-slave signal delay [ns]	Cable signal delay [ns]	Total signal delay [ns]	Signal delay difference [ns]	Delay switch position
10	Slave	313	280	313+280=593	593-593=0	0/33=0

Table 8.4: Calculation of the delay switch positions of a system with two transmitters

8.3.3 Systems with more than 4 carriers and a radiator under a balcony

The next figure illustrates a situation in which a radiation signal delay occurs and which can be compensated for. For systems with more than four carriers, add one delay switch position per 10 meter (33 feet) difference in signal path length to the radiators which are closest to the overlapping coverage area. In the next figure the signal path length difference is 12 meter. Add one delay switch position to the calculated switch position(s) for the radiator(s) under the balcony.

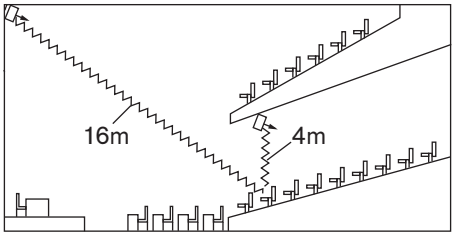

Figure 8.5: Radiation path length difference for two radiators

9 Third-party integration

The Conference protocol can be integrated and used to control the INTEGRUS system.

The Conference protocol is a platform-independent protocol. It is based on WebSocket technology to enable scalability, on HTTPS to ensure increased security, and on JSON to allow it to be platform independent.

You can find the documentation for the Conference Protocol (ConferenceProtocol.chm) in the Docs directory of the delivery. It is also by default in C:\Program Files\Bosch\DICENTIS\ConferenceProtocol.chm.

10 Testing

10.1 Integrus Receiver

The receivers can be switched to a test-mode to get an indication of the reception quality for each carrier separately. To activate the test-mode:

1. Push the channel selector to the Up-position
2. Press the on/off button and hold both for ca. 2 seconds
3. When in test-mode, switch between carriers by using the channel selector

For each carrier the display shows a relative value of the signal strength, Figure of Merit(FOM), and a graphical quality indication symbol.
The reception quality can be assessed as follows:

Indication	Quality
00-39	Good reception. Very good audio quality.
40-49	Weak reception. Ticks in the audio.
50-90	No or bad reception. Poor audio quality.

The test mode is deactivated when the receiver is switched off.

10.2 Test the coverage area

Do an extensive quality test on reception to make sure that the whole area is covered with IR radiation of adequate strength and that there are no black spots. You can do such a test in two ways:

Testing during installation

1. Check that all radiators are connected and powered up.
2. Check that no loose cables are connected to a radiator.
3. Switch the transmitter off and on to re-initialize the auto equalization of the radiators.
4. Set the transmitter in the Test-mode.
   – For each channel, a different test tone frequency will be transmitted.
5. Set a receiver on the highest available channel.
6. Listen through the headphones to the transmitted test tone.
7. Test all positions and directions. Refer to section Testing all positions and directions in this chapter.

Testing during a meeting

1. Set a receiver in the Test-mode.
2. Select the highest available carrier.
   – The quality of the received carrier signal is indicated on the display of the receiver. See *Integrus Receiver, page 56*.
3. Test all positions and directions. Refer to section Testing all positions and directions in this chapter.
   – The quality indication should be between 00 and 39 (good reception).

Testing all positions and directions

With the transmitter and the receiver in one of the two test modes, go around the conference hall. Test the reception quality at every position where the infrared signals must be received. When an area is detected where there is bad reception or even no reception at all, three main causes must be considered:

Bad coverage

The receiver cannot pick up infrared radiation of adequate strength. This can happen because:

- The tested position is outside the footprint of the installed radiators
- The radiation is blocked by obstacles such as a column, an overhanging balcony or other large objects.

In the first case:

1. Check that you used the correct footprints for the system design.
2. Check that radiators with enough output power are installed.
3. Check that a radiator is not accidentally switched to half-power operation.

When the bad reception is caused by a blocked radiation path:

- Try to remove the blocking obstacle
- Add an extra radiator to cover the shaded area.

Black spots

The receiver picks up IR signals from two radiators that cancel out each other.
You can identify a black spot when:

- The bad reception only occurs along a specific line, and/or
- When good reception returns when the receiver is rotated to another direction.

To confirm this:

1. Keep the receiver in the position and direction with the bad reception.
2. Shade-off the radiation from one radiator with your hand, or switch off one radiator.

If this improves the reception quality, then the black spot is causing the problem. Note that IR radiation that is reflected from a surface with a high reflectively can also cause black spots.

Black spots can occur in case a transmitter is located in the same room as the radiators. In that case:

- Disable the mini IR radiator of the transmitter with the configuration menu.
- Check that the signal delay compensation switches on the radiators are set to the correct value.
- Check that a switch is not accidentally positioned between two numbers.
- Re-check your system design. When necessary, reduce the distance between the two radiators that cause the problem and/or add an extra radiator.

Note that due to the physical characteristics of the signal distribution, it is not always possible to completely avoid black spots.

Interference from IR systems

IR assisted hearing systems and IR microphones operating at frequencies above 2 MHz can disturb the reception at the lowest carriers. In such case, disable the lowest two carriers and re-check the reception.

11 Maintenance

The INTEGRUS system requires a few maintenance operations, which are given in the following table.

INTEGRUS component	Interval	Check
Rechargeable battery pack	Regularly after three years.	The batteries are not leaking. Replace the battery if there is any sign of leakage or corrosion.
	Five years.	Replace the battery pack. Ensure that only the battery pack LBB4550/10 is used.
Radiator	Once a year	Inspect the installation, if radiators are suspended. Take remedial actions immediately if any sign of weakness or damage is detected.
Lithium battery in the INT-TXO	Seven years	Replace the battery.

12 Technical data

12.1 Electrical

12.1.1 Overall system characteristics

Transmission characteristics

IR transmission wavelength	870 nm
Modulation frequency	Carriers 0 to 5: 2 – 6 MHz, according to IEC 61603 part 7 Carriers 6 and 7: up to 8 MHz
Protocol and modulation	DQPSK, according to IEC technique 61603 part 7

Cabling and system limits

Cable type	75 Ω RG59
Maximum number of radiators	30 per HF output
Maximum cable length	900 m (2.970 ft) per HF output.

12.1.2 Transmitter

	INT-TXO Transmitter OMNEO
Power consumption (W)	10 W
Nominal voltage (VDC)	48 VDC
PoE input	PoE IEEE 802.3af Type 1, Class 3; PoE IEEE 802.3at Type 1, Class 3
Battery type	Lithium
Typical battery life (years)	7

12.1.3 Radiators and Accessories

Medium and High Power Radiators

Mains voltage	100-240 Vac, 50-60 Hz
Power consumption	
LBB 4511, operating	100 W
LBB 4511, standby	8 W
LBB 4512, operating	180 W
LBB 4512, standby	10 W
Number of IREDs	
LBB 4511	260
LBB 4512	480
Total optical peak intensity	

LBB 4511	12 W/sr
LBB 4512	24 W/sr
Angle of half intensity	± 22°
HF input	Nominal 1 Vpp, minimum 10 mVpp

12.1.4 Receivers, battery packs, and chargings units

Pocket receivers

IR radiance level	4 mW/m^2 per carrier
Angle of half sensitivity	± 50°
Headphone output level at 2.4 V	450 mVrms (speech at maximum volume, 32 ohm headphone)
Headphone output frequency range	20 Hz to 20 kHz
Headphone output impedance	32 ohm to 2 kohm
Max. signal-to-noise ratio	80 dB(A)
Supply voltage	1.8 to 3.6 V, nominal 2.4 V
Power consumption at 2.4 V (battery voltage)	15 mA (speech at maximum volume, 32 ohm headphone)
Power consumption (standby)	< 1 mA

NiMH battery pack

Voltage	2.4 V
Capacity	1100 mAh

Charging units

Mains voltage	100-240 Vac, 50-60 Hz
Power consumption	300 W (56 receivers charging)
Power consumption (standby)	17 W (no receivers in the charging unit)

12.2 Mechanical

12.2.1 Transmitter

	INT-TXO Transmitter OMNEO
Mounting type	Rack-mounted; Tabletop
Dimensions (H x W x D) (mm)	44.45 mm x 442 mm x 390 mm
Dimensions (H x W x D) (in)	1.75 in x 17.40 in x 15.35 in
Color (RAL)	RAL 9017 Traffic black

12.2.2 Radiators and Accessories

Radiators and Accessories

Mounting	– Suspension bracket for direct ceiling mounting. – Mounting plates for floor stands with M10 and 1/2 in Whitworth thread. – Optional wall mounting bracket (LBB 3414/00) available. – Safety eye.
Dimensions (H x W x D)	
LBB 4511 without bracket	200 x 500 x 175 mm (7.9 x 19.7 x 6.9 in)
LBB 4512 without bracket	300 x 500 x 175 mm (11.0 x 19.7 x 6.9 in)
Radiator angle	
floor-stand mounting	0, 15, and 30°
wall/ceiling mounting	0, 15, 30, 45, 60, 75 and 90°
Weight	
LBB 4511 without bracket	6.8 kg (15 lb)
LBB 4511 with bracket	7.6 kg (17 lb)
LBB 4512 without bracket	9.5 kg (21 lb)
LBB 4512 with bracket	10.3 kg (23 lb)
Color	Bronze

Wall Mounting Bracket

Dimensions (H x W x D)	200 x 280 x 160 mm (7.9 x 11.0 x 6.3 in)
Weight	1.8 kg (4.0 lb)
Color	Quartz grey

12.2.3 Receivers, Battery Packs and Charging Units

Pocket Receivers

Dimensions (H x W x D)	155 x 45 x 30 mm (6.1 x 1.8 x 1.2 in)
Weight	
excluding battery	75 g (0.16 lb)
including battery	125 g (0.27 lb)
Color	Charcoal with silver

NiMH Battery Pack

Dimensions (H x W x D)	14 x 28 x 50 mm (0.6 x 1.1 x 1.9 in)
Weight	50 g (0.11 lb)

Charging Units

Mounting	
LBB 4560/50	Screws and plugs for wall mounting included
Dimensions (H x W x D)	
LBB 4560/00	230 x 690 x 530 mm (9 x 27 x 21 in)
LBB 4560/50	130 x 680 x 520 mm (5 x 27 x 20 in)
Weight excl. receivers	
LBB 4560/00	15.5 kg (34 lb)
LBB 4560/50	11.2 kg (25 lb)
Weight incl. 56 receivers	
LBB 4560/00	22.3 kg (49 lb)
LBB 4560/50	18.0 kg (40 lb)
Color	Charcoal with grey

12.3 Environmental

12.3.1 Overall system conditions

Working conditions	Fixed; Stationary; Transportable
Temperature range	
Transport	-30 – 70 °C (-40 – 158 °F)
Operating and storage	LBB4540 and LBB4560 range: 5 – 35 °C (41 – 95 °F) LBB4511/00 and LBB4512/00: 5 – 35 °C (41 – 95 °F) INT-TXO: 5 – 45 °C (41 – 113 °F)
Relative humidity	
Transport	5 – 95%
Operating and storage	15 – 90%
Safety	LBB4540 range, LBB4560/00, LBB4560/50: EN60065/CAN/CSA-C22.2 60065 (Canada) / UL60065 (USA) LBB4511/00, LBB4512/00: EN60065/CAN/CSA-C22.2 60065 (Canada) / UL1419 (USA) INT-TXO: UL/CSA62368-1
EMC emission	According to harmonized standard EN55032 and EN55035 and FFC rules part 15, complying with the limits for a Class A digital device
EMC immunity	According to harmonized standard EN55035
EMC approvals	Affixed with the CE mark
ESD	According to harmonized standard EN55035
Mains harmonics	According to harmonized standard EN55103-1
Environmental requirements	Contains no banned substances as specified in RoHS Directive

12.3.2 Transmitter

	INT-TXO Transmitter OMNEO
Operating temperature (°C)	5 °C – 45 °C
Operating temperature (°F)	41 °F – 113 °F
Storage temperature (°C)	5 °C – 45 °C
Storage temperature (°F)	41 °F – 113 °F
Transportation temperature (°C)	-30 °C – 70 °C
Transportation temperature (°F)	-22 °F – 158 °F

	INT-TXO Transmitter OMNEO
Operating relative humidity, non-condensing (%)	5% – 95%

12.4 Rules and Standards

12.4.1 Overall system conformance

- Conforms to IEC 60914, the international standard for conference systems
- Conforms to IEC 61603 part 7, the international standard for digital infrared transmission of audio signals for conference and similar applications

12.5 Guaranteed rectangular footprints

12.5.1 Metric values of radiators with hardware version higher than 2.00

			LBB 4511/00 at full power				LBB 4512/00 at full power			
Nr.	**H**	**a**	**A**	**L**	**W**	**X**	**A**	**L**	**W**	**X**
1	2,5	0	814	37	22	8,5	1643	53	31	11,5
	5	15	714	34	21	8	1440	48	30	10,5
		30	560	28	20	5	1026	38	27	6,5
		45	340	20	17	2	598	26	23	3
		60	240	16	15	-0,5	380	20	19	0
		90	169	13	13	-6,5	196	14	14	-7
	10	15	770	35	22	10	1519	49	31	12,5
		30	651	31	21	6	1189	41	29	8
		45	480	24	20	2,5	837	31	27	3
		60	380	20	19	-1,5	600	25	24	-1
		90	324	18	18	-9	441	21	21	-10,5
	20	30	609	29	21	12	1364	44	31	11
		45	594	27	22	6	1140	38	30	4,5
		60	504	24	21	0,5	899	31	29	-1,5
		90	441	21	21	-10,5	784	28	28	-14
2	2,5	15	360	24	15	5	714	34	21	7
	5	15	375	25	15	6	714	34	21	8
		30	294	21	14	4	560	28	20	5
		45	195	15	12	1,5	340	20	17	2
		60	156	13	12	-1	240	16	15	-0,5
		90	121	11	11	-5,5	169	13	13	-6,5
	10	30	330	22	15	5,5	651	31	21	6
		45	285	19	15	2,5	480	24	20	2,5
		60	224	16	14	-1	380	20	19	-1,5
		90	196	14	14	-7	324	18	18	-9
	20	60	255	17	15	2,5	504	24	21	0,5

			LBB 4511/00 at full power				LBB 4512/00 at full power			
Nr.	**H**	**a**	**A**	**L**	**W**	**X**	**A**	**L**	**W**	**X**
		90	225	15	15	-7,5	441	21	21	-10,5
4	2,5	15	187	17	11	4	360	24	15	5
	5	15	187	17	11	5	375	25	15	6
		30	165	15	11	3,5	294	21	14	4
		45	120	12	10	1,5	195	15	13	1,5
		60	90	10	9	-0,5	156	13	12	-1
		90	81	9	9	-4,5	121	11	11	-5,5
	10	45	154	14	11	3	285	19	15	2,5
		60	132	12	11	0	224	16	14	-1
		90	100	10	10	-5	196	14	14	-7
	20	90	100	10	10	-5	225	15	15	-7,5
8	2,5	15	96	12	8	3	187	17	11	4
	5	15	84	12	7	4,5	187	17	11	5
		30	88	11	8	3	165	15	11	3,5
		45	63	9	7	1,5	120	12	10	1,5
		60	56	8	7	-0,5	90	10	9	-0,5
		90	49	7	7	-3,5	81	9	9	-4,5
	10	60	64	8	8	1,5	132	12	11	0
		90	64	8	8	-4	100	10	10	-5

(The mounting height is the distance from the reception plane and not from the floor).

Nr = Numberof carriers
H = mounting height [m]
a = mounting angle [degrees]
A= area [m^2]
L= length[m]
W= width [m]
X= offset [m]

12.5.2 Imperial values of radiators with hardware version higher than 2.00

			LBB 4511/00 at full power				LBB 4512/00 at full power			
Nr.	**H**	**a**	**A**	**L**	**W**	**X**	**A**	**L**	**W**	**X**
1	8	0	8712	121	72	28	17748	174	102	38
	16	15	7728	112	69	26	15386	157	98	34
		30	6072	92	66	16	11125	125	89	21
		45	3696	66	56	7	6375	85	75	10
		60	2548	52	49	-2	4092	66	62	0
		90	1849	43	43	-21	2116	46	46	-23
	33	15	8280	115	72	33	16422	161	102	41
		30	7038	102	69	20	12825	135	95	26
		45	5214	79	66	8	9078	102	89	10
		60	4092	66	62	-5	6478	82	79	-3
		90	3481	59	59	-30	4761	69	69	-34
	66	30	6555	95	69	39	14688	144	102	36
		45	6408	89	72	20	12250	125	98	15
		60	5451	79	69	2	9690	102	95	-5
		90	4761	69	69	-34	8464	92	92	-46
2	8	15	3871	79	49	16	7728	112	69	23
	16	15	4018	82	49	20	7728	112	69	26
		30	3174	69	46	13	6072	92	66	16
		45	1911	49	39	5	3696	66	56	7
		60	1677	43	39	-3	2548	52	49	-2
		90	1296	36	36	-18	1849	43	43	-21
	33	30	3528	72	49	18	7038	102	69	20
		45	3038	62	49	8	5214	79	66	8
		60	2392	52	46	-3	4092	66	62	-5
		90	2116	46	46	-23	3481	59	59	-30
	66	60	2744	56	49	8	5451	79	69	2
		90	2401	49	49	-25	4761	69	69	-34
4	8	15	2016	56	36	13	3871	79	49	16
	16	15	2016	56	36	16	4018	82	49	20
		30	1764	49	36	11	3174	69	46	13
		45	1287	39	33	5	2107	49	43	5

			LBB 4511/00 at full power				LBB 4512/00 at full power			
Nr.	**H**	**a**	**A**	**L**	**W**	**X**	**A**	**L**	**W**	**X**
		60	990	33	30	-2	1677	43	39	-3
		90	900	30	30	-15	1296	36	36	-18
	33	45	1656	46	36	10	3038	62	49	8
		60	1404	39	36	0	2392	52	46	-3
		90	1089	33	33	-16	2116	46	46	-23
	66	90	1089	33	33	-16	2401	49	49	-25
8	8	15	1014	39	26	10	2016	56	36	13
	16	15	897	39	23	15	2016	56	36	16
		30	936	36	26	10	1764	49	36	11
		45	690	30	23	5	1287	39	33	5
		60	598	26	23	-2	990	33	30	-2
		90	529	23	23	-11	900	30	30	-15
	33	60	676	26	26	5	1404	39	36	0
		90	676	26	26	-13	1089	33	33	-16

(The mounting height is the distance from the reception plane and not from the floor).

Nr = Numberof carriers
H = mounting height [ft]
a = mounting angle [degrees]
A= area [ft^2]
L= length[ft]
W= width [ft]
X= offset [ft]

12.5.3 Metric values of radiators with hardware version lower than 2.00.

			LBB 4511/00 at full power				LBB 4512/00 at full power			
Nr.	**H**	**a**	**A**	**L**	**W**	**X**	**A**	**L**	**W**	**X**
1	2.5		627	33	19	7	1269	47	27	10
	5	15	620	31	20	7	1196	46	26	8
		30	468	26	18	4	816	34	24	6
		45	288	18	16	2	480	24	20	2
		60	196	14	14	0	324	18	18	0
		90	144	12	12	-6	196	14	14	-7
	10	15	589	31	19	9	1288	46	28	10
		30	551	29	19	5	988	38	26	6
		45	414	23	18	2	672	28	24	2
		60	306	18	17	-1	506	23	22	-1
		90	256	16	16	-8	400	20	20	-10
	20	30	408	24	17	13	1080	40	27	11
		45	368	23	16	7	945	35	27	4
		60	418	22	19	1	754	29	26	-1
		90	324	18	18	-9	676	26	26	-13
2	2.5	15	308	22	14	4	576	32	18	6
	5	15	322	23	14	5	620	31	20	7
		30	247	19	13	3	468	26	18	4
		45	168	14	12	1	288	18	16	2
		60	132	12	11	-1	196	14	14	0
		90	100	10	10	-5	144	12	12	-6
	10	30	266	19	14	6	551	29	19	5
		45	234	18	13	2	414	23	18	2
		60	195	15	13	-1	306	18	17	-1
		90	144	12	12	-6	256	16	16	-8
	20	60	195	15	13	3	418	22	19	1
		90	196	14	14	-7	324	18	18	-9
4	2.5	15	160	16	10	3	308	22	14	4
	5	15	144	16	9	4	322	23	14	5
		30	140	14	10	3	247	19	13	3
		45	99	11	9	1	168	14	12	1

			LBB 4511/00 at full power				LBB 4512/00 at full power			
Nr.	**H**	**a**	**A**	**L**	**W**	**X**	**A**	**L**	**W**	**X**
		60	90	10	9	-1	132	12	11	-1
		90	64	8	8	-4	100	10	10	-5
	10	45	120	12	10	3	234	18	13	2
		60	108	12	9	0	195	15	13	-1
		90	100	10	10	-5	144	12	12	-6
	20	90	64	8	8	-4	196	14	14	-7
8	2.5	15	84	12	7	2	160	16	10	3
	5	15	60	10	6	4	144	16	9	4
		30	70	10	7	3	140	14	10	3
		45	63	9	7	1	99	11	9	1
		60	49	7	7	0	90	10	9	-1
		90	36	6	6	-3	64	8	8	-4
	10	60	49	7	7	2	108	12	9	0
		90	49	7	7	-3.5	100	10	10	-5

(The mounting height is the distance from the reception plane and not from the floor).

Nr = Numberof carriers
H = mounting height [m]
a = mounting angle [degrees]
A= area [m^2]
L= length[m]
W= width [m]
X= offset [m]

12.5.4 Imperial values of radiators with hardware version lower than 2.00.

			LBB 4511/00 at full power				LBB 4512/00 at full power			
Nr.	**H**	**a**	**A**	**L**	**W**	**X**	**A**	**L**	**W**	**X**
1	8		6696	108	62	23	13706	154	89	33
	16	15	6732	102	66	23	12835	151	85	26
		30	5015	85	59	13	8848	112	79	20
		45	3068	59	52	7	5214	79	66	7
		60	2116	46	46	0	3481	59	59	0
		90	1521	39	39	-20	2116	46	46	-23
	33	15	6324	102	62	30	13892	151	92	33
		30	5890	95	62	16	10625	125	85	20
		45	4425	75	59	7	7268	92	79	7
		60	3304	59	56	-3	5400	75	72	-3
		90	2704	52	52	-26	4356	66	66	-33
	66	30	4424	79	56	43	11659	131	89	36
		45	3900	75	52	23	10235	115	89	13
		60	4464	72	62	3	8075	95	85	-3
		90	3481	59	59	-30	7225	85	85	-43
2	8	15	3312	72	46	13	6195	105	59	20
	16	15	3450	75	46	16	6732	102	66	23
		30	2666	62	43	10	5015	85	59	13
		45	1794	46	39	3	3068	59	52	7
		60	1404	39	36	-3	2116	46	46	0
		90	1089	33	33	-16	1521	39	39	-20
	33	30	2852	62	46	20	5890	95	62	16
		45	2537	59	43	7	4425	75	59	7
		60	2107	49	43	-3	3304	59	56	-3
		90	1521	39	39	-20	2704	52	52	-26
	66	60	2107	49	43	10	4464	72	62	3
		90	2116	46	46	-23	3481	59	59	-30
4	8	15	1716	52	33	10	3312	72	46	13
	16	15	1560	52	30	13	3450	75	46	16
		30	1518	46	33	10	2666	62	43	10
		45	1080	36	30	3	1794	46	39	3

			LBB 4511/00 at full power				LBB 4512/00 at full power			
Nr.	**H**	**a**	**A**	**L**	**W**	**X**	**A**	**L**	**W**	**X**
		60	990	33	30	-3	1404	39	36	-3
		90	676	26	26	-13	1089	33	33	-16
	33	45	1287	39	33	10	2537	59	43	7
		60	1170	39	30		2107	49	43	-3
		90	1089	33	33	-16	1521	39	39	-20
	66	90	676	26	26	-13	2116	46	46	-23
8	8	15	897	39	23	7	1716	52	33	10
	16	15	660	33	20	13	1560	52	30	13
		30	759	33	23	10	1518	46	33	10
		45	690	30	23	3	1080	36	30	3
		60	529	23	23		990	33	30	-3
		90	400	20	20	-10	676	26	26	-13
	33	60	529	23	23	7	1170	39	30	0
		90	529	23	23	-11	1089	33	33	-16

(The mounting height is the distance from the reception plane and not from the floor).

Nr = Numberof carriers
H = mounting height [ft]
a = mounting angle [degrees]
A= area [ft^2]
L= length[ft]
W= width [ft]
X= offset [ft]

13 Support services and Bosch Academy

Support

Access our **support services** at www.boschsecurity.com/xc/en/support/.

Bosch Security and Safety Systems offers support in these areas:

- Apps & Tools
- Building Information Modeling
- Warranty
- Troubleshooting
- Repair & Exchange
- Product Security

Bosch Building Technologies Academy

Visit the Bosch Building Technologies Academy website and have access to **training courses, video tutorials** and **documents**: www.boschsecurity.com/xc/en/support/training/

Bosch Security Systems B.V.
Torenallee 49
5617 BA Eindhoven
Netherlands
www.boschsecurity.com
© Bosch Security Systems B.V., 2024

Building solutions for a better life

202407100949