BalanceBox®
HEIGHT ADJUSTABLE MOUNTS

Mobile Stand

For the BalanceBox®650
Height set-up instructions

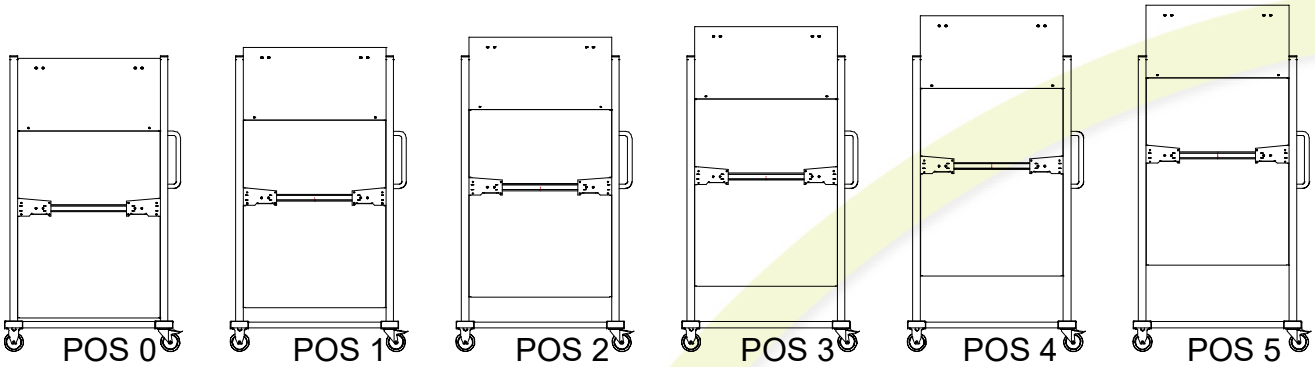

Position	0	1	2	3	4	5
Displacement mm	0	70	140	210	280	350
Displacement Inch	0"	2.8"	5.5"	8.3"	11.0"	13.8"
Total height mm	1955	1980	2050	2120	2190	2260
Total height Inch	75.8"	78"	80.7"	83.5"	86.2"	89"
VESA top mm	1657	1727	1797	1867	1937	2007
VESA top Inch	65.2"	68"	70.7"	73.5"	76.3"	79"
VESA center mm	1357	1427	1497	1567	1637	1707
VESA Center Inch	53.4"	56.2"	58.9"	61.7"	64.4"	67.2"

Center panels can be set at 6 different heights Positions 0 (standard) to 5.
You may want to set the height according to the situation of use.

- The top position of the VESA pattern moves up with the center panels, the center position depends on the size of the VESA pattern, an example is shown for VESA 600x600 mm.
- The Touchpanel can always be moved down on the BalanceBox® below the maximum height specified for the Mobile stand, this is important for moving through doorways.

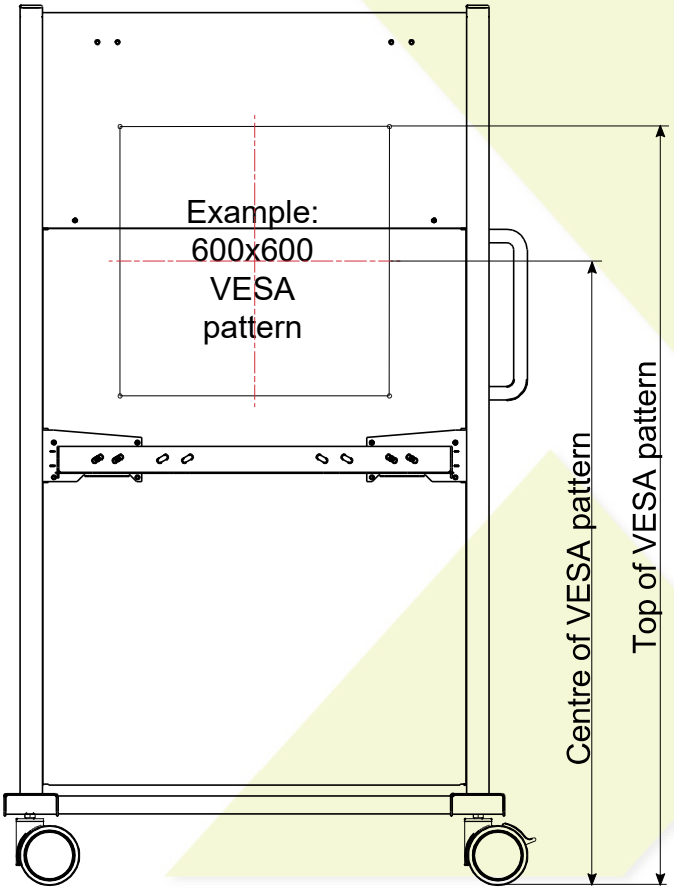

Part nr. 902852-00

1 Undo 5 hex. Head socket screws to disassemble the tube on one side of the top frame ⬢(5 mm)

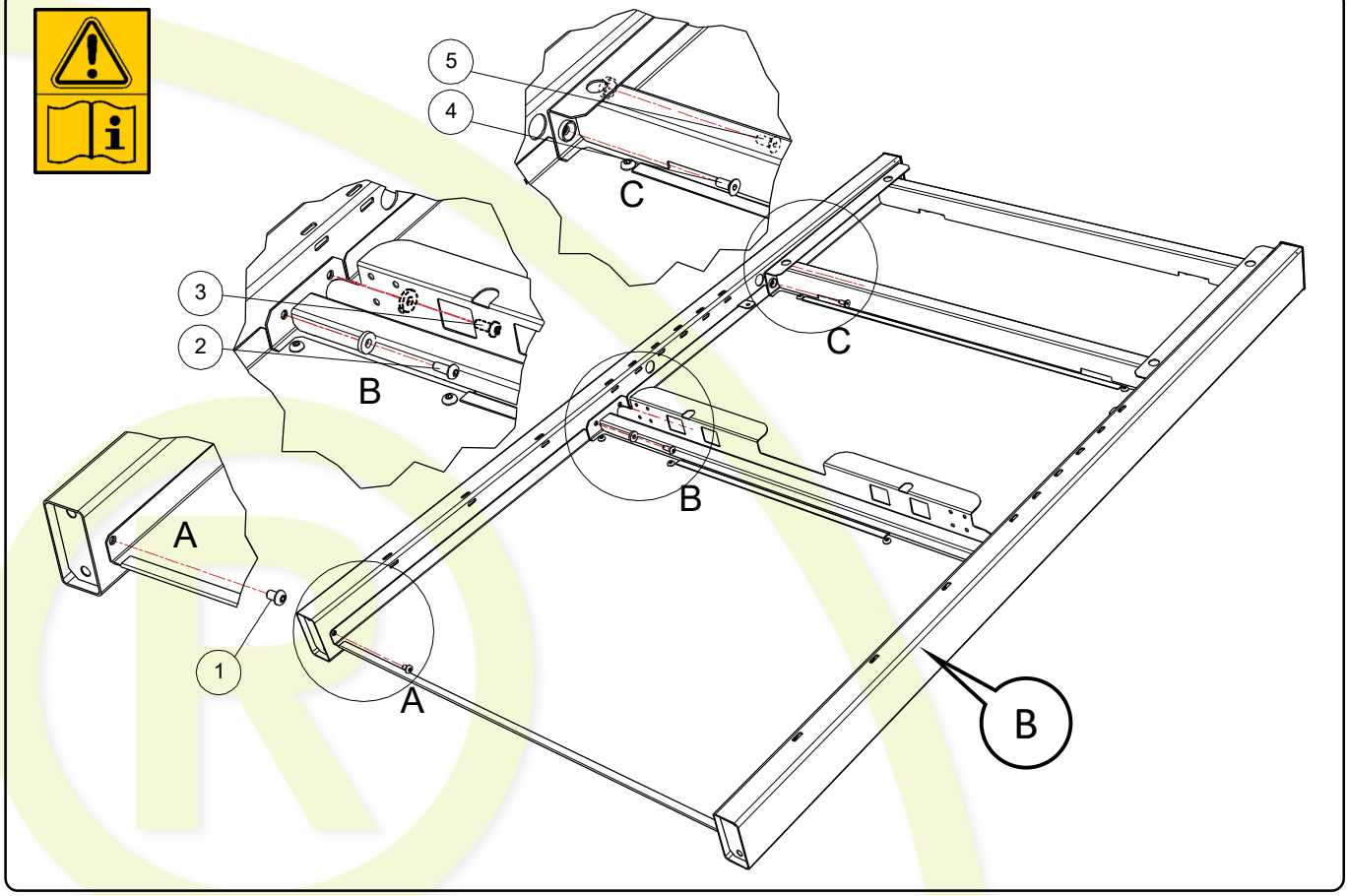

1a Choose the new frame height (70 mm / 2.8” intervals and redo the 5 hex. head socket screws, tighten well (⬢ 5 mm)

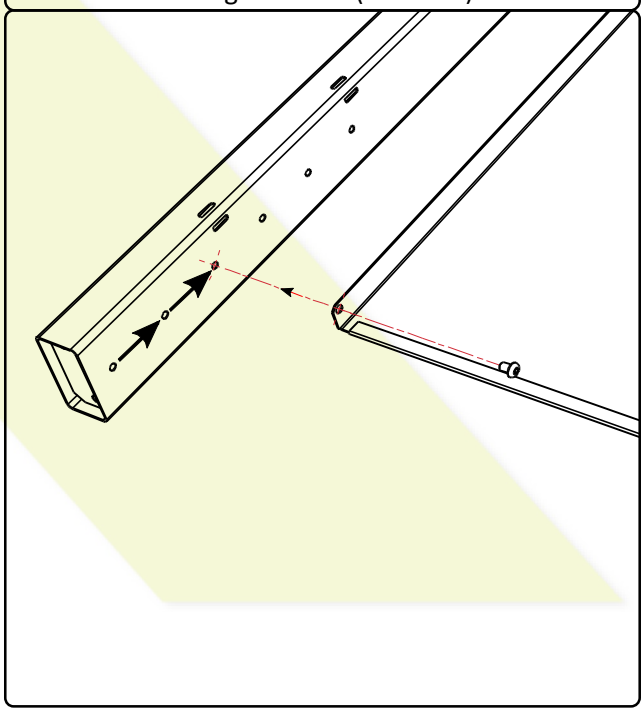

1b Repeat the process on the other side of the frame

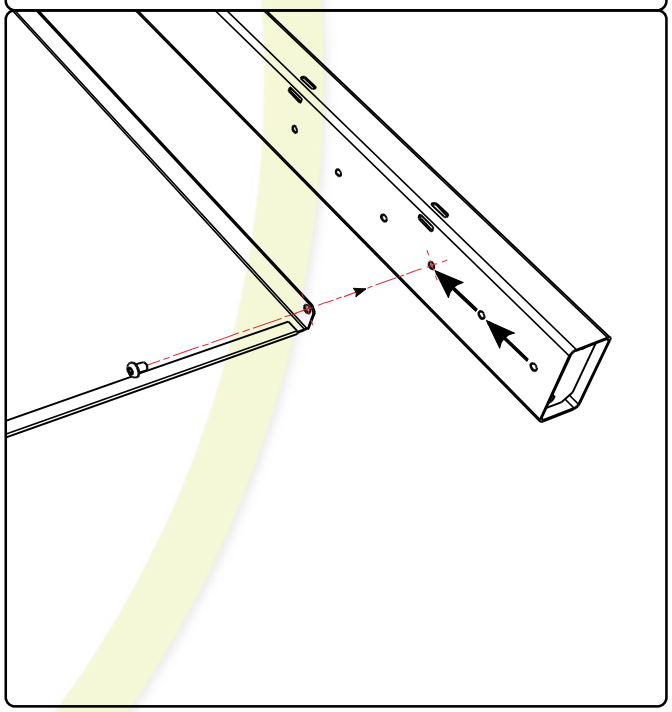

Thomas Regout Inc 121 Smokehill Lane Woodstock 30188 GA USA **Regout Balance Systems B.V.** Industrieweg 40 6219NR Maastricht The Netherlands