USER MANUAL

Avonic Wall Mount

AV-MT200, AV-MT220

www.avonic.com • © October 2022 • Version 1.2

AVONIC

DISCLAIMER AND CONTACT

Disclaimer

All text, graphics, photographs, trademarks, logos, artwork and computer code (collectively, "Content"), including but not limited to the design, structure, selection, coordination, expression, "look and feel" and arrangement of such Content, contained in this Manual is owned, controlled or licensed by or to Avonic, and is protected by trade dress, copyright, patent and trademark laws, and various other intellectual property rights and unfair competition laws.

Except as expressly provided in these Terms of Use, no Content of this Manual may be copied, reproduced, republished, uploaded, posted, publicly displayed, encoded, translated, transmitted or distributed in any way (including "mirroring") to any other computer, server, Website or other medium for publication or distribution or for any commercial enterprise, without the prior written consent of Avonic.

Copyright © 2022 AVONIC All Rights Reserved.

The information contained in this Manual is subject to change without notice.

Contact Info

For any questions or suggestions, contact your reseller or local distributor of Avonic.

Visit the Avonic website www.avonic.com to find your local Avonic distributor or to download the most recent version of the documentation.

Join Avonic on Social Media

www.Facebook.com/avonicPTZ

www.instagram.com/avonicPTZ

www.LinkedIn.com/company/avonic

www.youtube.com/channels/avonic

www.twitter.com/avonic

IMPORTANT INFORMATION

Liability

Avonic will NOT be held responsible for any damage or injury caused by unqualified persons carrying out these tasks, or by not following the instructions in this Manual.

Intended Use and Non-Intended Use

Installation

The following applies to the **installation** of the mount and the camera:

- The installation activities described in this Manual should ONLY be executed by experienced technicians.
- The installation activities should NOT be executed by minors, mentally disabled persons or other persons not qualified to perform these tasks.

Operation

The following applies to the **operation** of the mount and the camera:

- The operational activities described in this Manual should ONLY be executed by people with enough technical knowledge to perform the activities in a safe manner.
- This Product is specifically developed for video conferencing / streaming via internet by companies, institutes and universities. It is NOT meant for private use in the residential area.
- This Product should ONLY be used indoors.
- This Product is NOT a medical device and should NOT be used as a substitute for professional medical judgment. It is NOT designed or intended for use in the diagnosis of disease or other conditions, or in the cure, mitigation, treatment, or prevention of any condition or disease. Please consult your healthcare provider prior to making any decisions related to your health.

Important Precautions

	This Product is NOT intended for use where failure of the device could lead to death, personal injury, or severe environmental damage.
	Be sure that you have COMPLETELY READ and UNDERSTOOD ALL information in this Manual before unpacking, installing and using this Product. Keep the Manual in a safe place for future reference or download it from www.avonic.com.
	Failure to follow the SAFETY NOTES as described in this chapter could result in fire, electric shock, injury, or damage to this Product or other property.
	Power this Product ONLY with the included cable and power adapter. Other adapters may not meet applicable safety standards, and could pose a risk of death or injury when connected.

Symbols Used in This Manual

Symbol	Meaning	Description
	Danger	Not following the instructions associated with this symbol may lead to personal injury and / or serious damage to the Product.
	Electrical Shock	Not following the instructions associated with this symbol may lead to life-threatening situations and / or serious damage to the Product.
	Important	The information associated with this symbol requires special attention.

Symbol	Meaning	Description
	Information	The information associated with symbol refers to a general remark or a reference to other documentation.
	Instruction	This symbol refers to one or more user instructions.
	Recycling	Specific parts of the Product can be re-used.

Acronyms

The following acronyms are used in this Manual:

PTZ	Pan / Tilt / Zoom
SKU	Stock Keeping Unit
UNC	Unified National Coarse

Contents

DISCLAIMER AND CONTACT ii
IMPORTANT INFORMATION iii
Liability iii
Intended Use and Non-Intended Use iii
Installation iii
Operation iii
Important Precautions iii
Symbols Used in This Manual iii
Acronyms iv
INTRODUCTION 6
Purpose of This Manual 6
Target Audience 6
Document Structure 6
SAFETY INSTRUCTIONS 7
Important Precautions 7
Intended Use 7
Handling 7
Mounting 7
Ventilation 7
Repair 8
PRODUCT OVERVIEW 9
Description 9
Features 9
UNPACKING 10
Package Contents 10
Unpacking the Mount 11
Return Procedure 11
MOUNTING AND INSTALLATION 12
Mounting on a Wall 12
1. Baseplate 12
2. Mounting the Camera 13
3. Cable Cover 14
4. Cover Cap 14
Mounting on a mounting pole 15
Trussmount clamp and mounting pole 15
MEASUREMENTS AND SPECS MT200 16
General Specifications 17
MEASUREMENTS AND SPECS MT220 18
General Specifications 19
TRANSPORT AND STORAGE 20
DISPOSAL AND RECYCLING 21
Index 22

INTRODUCTION

Purpose of This Manual

This Manual describes the safety precautions and the instructions for safe unpackaging, installation, operation, maintenance and disposal of the Avonic MT200 and MT220 Wall Mount.

Note that this is ONE manual for both mounts and that the mounts are separately sold. In this Manual the Avonic MT200 and MT200 Wall Mount is referred to as the 'Product'.

If you want to use the mount and camera in combination with the CamDirector, you need to make sure that **the MT200 is NOT compatible** in combination with such a system! Use the MT220 to do this.

Target Audience

This Manual is developed for installation technicians who install the Product at client sites, and for IT professionals who are responsible for operating the Product.

Document Structure

The Manual is subdivided into the following **Chapters**:

1. Introduction
2. Safety
3. Product Overview
4. Unpacking
5. Mounting and Installation
6. Measurements and Specs MT200
7. Measurements and Specs MT220
8. Transport and Storage
9. Disposal and Recycling

SAFETY INSTRUCTIONS

This chapter contains important safety information regarding the unpacking, installation and use of the mount and the camera.

Important Precautions

	This Product is NOT intended for use where failure of the device could lead to death, personal injury, or severe environmental damage.
	Be sure that you have COMPLETELY READ and UNDERSTOOD ALL information in this Manual before unpacking, installing and using this Product. Keep the Manual in a safe place for future reference or download it from www.avonic.com.
	Failure to follow the SAFETY NOTES as described in this chapter could result in fire, electric shock, injury, or damage to this Product or other property.
	Power this Product ONLY with the included cable and power adapter. Other adapters may not meet applicable safety standards, and could pose a risk of death or injury when connected.

Intended Use

See section Intended Use and Non-Intended Use on page iii for details.

Handling

To prevent the risk of injury, take the following precautions when handling this Product:

- Handle the Product with care. It is made of metal and plastic components.
- The Product can be damaged if dropped, burned, punctured or crushed, or if it comes into contact with liquid.
- Do not pick up and move the Product unit while a tripod is attached. The fitting may break under the weight of the tripod, which may result in injury.
- If you suspect any damage to the Product, discontinue its use, as it may cause injury.

Mounting

To prevent the Product from falling down which may cause injuries:

- Mount this Product to a wall or mounting pole.
- ONLY use an Avonic mount for mounting to a wall or mounting pole.
- Ensure the mounting construction is capable of supporting four times the weight of the Product. (See 'General Specifications > Weight product' in the Product Datasheet for the exact weight.)
- Use a safety loop or drop protection that prevents the Product from falling if the mounting construction fails.
- During installation, NEVER install a Product above a person.
- Check the installation at least once a year. An improper mounting could cause the unit to fall off, resulting in personal injury.

Ventilation

To prevent the risk of life-threatening injury or damage to the Product or other property, caused by electric shock or fire hazard due to overheating of the camera mounted on the Product:

- Maintain adequate ventilation by NOT installing or placing the Product unit in a bookcase, built-in cabinet or any other confined space.
- Ensure that curtains or any other material does NOT obstruct the ventilation.

Repair

Take the following precautions if the Product should be repaired:

- Don't open this Product and don't attempt to repair it yourself. Disassembling the Product may damage it or may cause injury to you.
- If this Product is damaged, malfunctioning, or if it comes into contact with liquid, contact Avonic or an Avonic Authorized Service Provider.
- Repairs by service providers other than Avonic or an Avonic Authorized Service Provider may not involve the use of Avonic genuine parts and may affect the safety and functionality of the device. You can find more information about repairs and service at www.avonic.com.

PRODUCT OVERVIEW

Description

The Avonic MT220 and MT200 Wall Mount are both solid wall mounts suitable for the support of one or two CM40 or CM70 series PTZ cameras. Its discrete design matches the silent operation of Avonic PTZ cameras. The wall mount is a beautiful extension that not only ensures great and safe support of the PTZ cameras, but also allows for all the cables to be hidden inside the mount. Accessories include a heavy-duty 30mm steel ring specifically designed to mount the MT-220 and/or MT-200 on a truss clamp. For mobile applications the MT220 and MT200 can be mounted in a flight case or installed on a tripod. Also available in black to match our black PTZ cameras.

Features

The Avonic MT220 and MT200 are having the following features:

Camera support
Supports one or two CM40 or CM70 camera's.

Separate base and plate
Separate base and camera plate for hassle free mounting and cable installation.

Hands free installation
Hands free installation of the camera, only one screw needed to secure it.

Integrated
Integrated cable cover.

Design
Discrete and compact design.

Seamless integration
Seamless integration with the shape and color of Avonic PTZ cameras.

Accessories
Heavyduty 30mm steel ring specifically designed to mount the MT200 and MT220 on a truss clamp.

UNPACKING

This describes the contents of a complete Product package, and instructions for safe unpacking and (if necessary) Product return.

It is subdivided into the following sections:

1. Package Contents
2. Unpacking the Camera
3. Return Procedure

Package Contents

The following tables contains an overview of the package contents of the Product.

Take note that the mounts are **separately sold!** Check only the package contents for the mount you have.

No.	Quantity		Description	Avonic SKU
	MT200	MT220		
1	1 pc	1 pc	Wall Mount	AV-MT200-B/ -W AV-MT220-B/ -W
2	1 pc	3 pc	Black 30MM Cover Cap	-
3	1 pc	1 pc	30MM Steel Ring for Truss Mount	-
4	1 pc	2 pc	1/4"- UNC Pozidrive screw (20mm) to fasten camera	-
5	2 pc	2 pc	M6*10mm Allen Bolt screw	-
6	5 pc	8 pc	M3*6mm DIN9785 Pozidrive screws	-

Each item is visualized below and referenced by the associated number in the table above:

Package Contents MT200

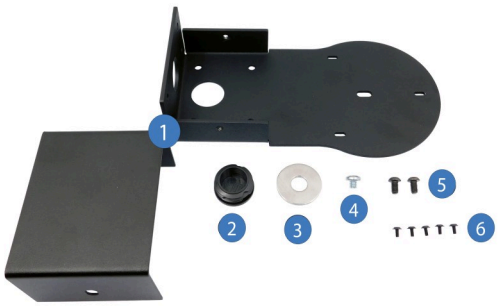

Package Contents MT220

Unpacking the Mount

Execute the following steps to unpack the MT220 or MT200 mount and associated components:

1. Open the plastic bag.
2. Verify that the contents of the bag exactly matches the items as described in Package Contents on page 10. Check **ONLY** the packets contents for the mount you have! If the described items in the package contents do not match, contact Avonic and stop here.

   The mount should be in its protective foam as follows:

MT220 in plastic bag

MT200 in plastic bag

3. Verify that the plastic mount bag is sealed. If this is NOT the case, contact Avonic and stop here.
4. Break the seal of the sealed mount bag.
5. Take the mount out of the bag.
6. Install the mount following the steps as described in the chapter MOUNTING AND INSTALLATION on page 12

Return Procedure

If, for any reason, you have to return the mount to Avonic, Execute the following steps:

1. Place the mount back in its protective foam and in **horizontal** position in the bag!
2. Place the mount with **all** of its components in the bag.
3. Verify that the contents of the bag **exactly** matches the items as described in Package Contents.
4. Contact Avonic for the Return Procedure.

MOUNTING AND INSTALLATION

This chapter describes the steps you have to perform to mount and install the Product in a correct and safe manner.

These steps are subdivided into the following groups, each of which is described in a separate section:

1. Mounting on a wall
2. Mounting on a mounting pole

If you want to use the mount and camera in combination with the CamDirector, you need to make sure that **the MT200 is NOT compatible** in combination with such a system! Use the MT220 to do this.

Take the following precautions to prevent the Product and camera from falling down which may cause injuries:

- Mount this Product to a wall or mounting pole.
- ONLY use an Avonic mount for mounting to a wall or mounting pole.
- Ensure the mounting construction is capable of supporting four times the weight of the Product. (See 'General Specifications > Weight product' in the Product Datasheet for the exact weight.)
- Use a safety loop or drop protection that prevents the Product from falling if the mounting construction fails.
- During mounting and installation, NEVER install a Product above a person.
- Check the installation at least once a year. An improper mounting could cause the unit to fall off, resulting in personal injury.

Mounting on a Wall

1. Baseplate

To install the mount, follow these instructions:

Mount the MT200 or MT220 baseplate (the bracket) to the wall (Figure 5 and 6). Make sure that you need more screws **(8)** to mount the MT220 to the wall. For both mounts it is possible to connect the cables from behind the wall. See the drawings under "Measurements and Specs" and figure 6 below.

For safety reasons, follow exactly the warning under Mounting and Installation, and make sure that the mounting construction is capable of supporting **four times** the weight of the Product.

Figure 1: Baseplate

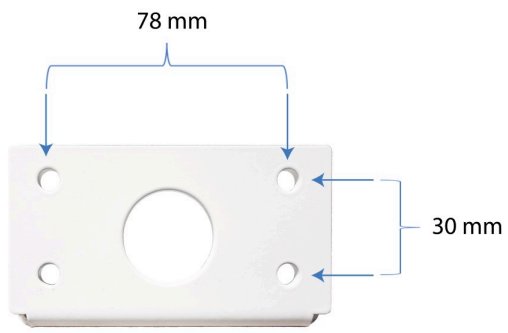

MT200

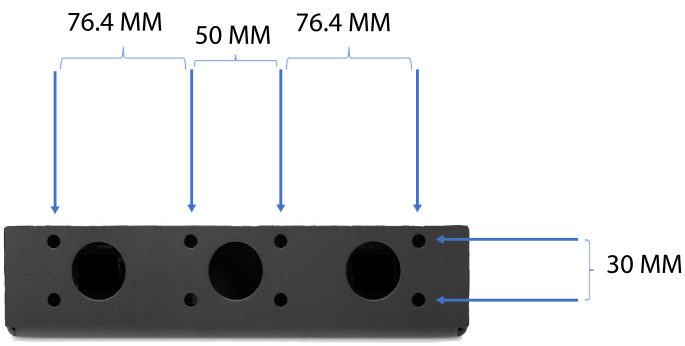

MT220

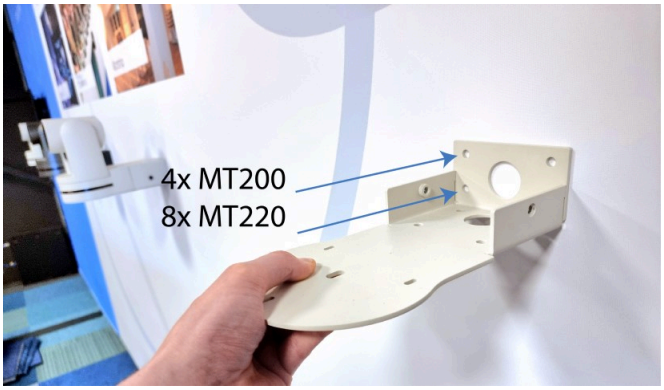

Figure 2: Screws and plugs

The screws and plugs are not included. See Package contents what is included.

2. Mounting the Camera

2. Place the CM40 or CM70 camera on its baseplate and mount it to its baseplate using the supplied 1/4" UNC (20mm) screws and the black M3*6mm Pozidrive screws. Make sure that you need more of these screws if you have the MT220. See the pictures below.

3. Connect all cables to the camera (figure 8), or connect all cables from behind the wall (figure 9). See also 1. Baseplate on page 12. The mount is designed in such a way, that you can release both the mount and the camera, so you have your hands free for connecting the cables.

Make sure that the camera is locked to its baseplate, **before** you release the camera. Otherwise the camera could move and fall off the mount!

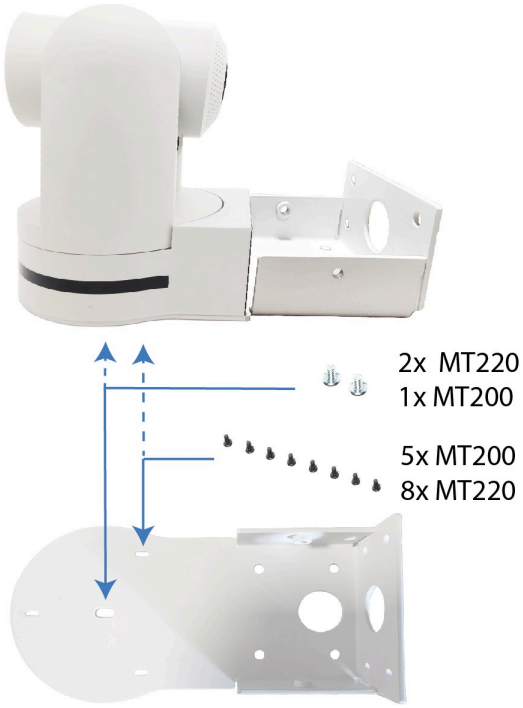

Figure 3: Mounting camera to the baseplate

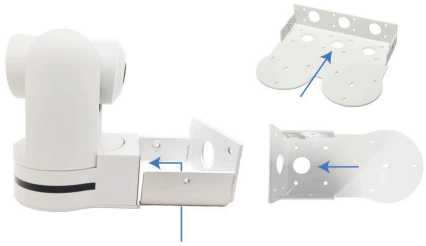

Figure 4: Connecting cables

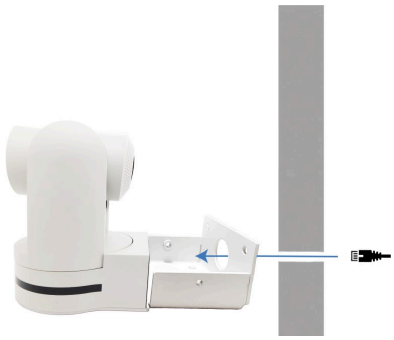

Figure 5: Connecting cables from behind the wall

3. Cable Cover

4. Put the cable cover over the back of the bracket, neatly concealing the cables and connectors of the camera. Note that the MT220 have a bigger cover than you can see on the pictures below. The cover cap can be screwed in place using the supplied M6 Allen bolts (Figure 9) for the MT200 as well as the MT220.

Figure 6: Cover Cap

4. Cover Cap

5. Place the Cover cap to the 30 mm baseplate gap or gaps that are empty.

Figure 7: Cover Cap

Mounting on a mounting pole

Trussmount clamp and mounting pole

Trussmount clamp

If you use the MT220 in combination with a Trussmount Clamp, make sure that you use the hole in the **CENTER** of the baseplate. Otherwise the mount could tilt to one side.

Follow the instructions below to use a Trussmount Clamp:

1. Follow **ONLY step 2** in 2. Mounting the Camera on page 13 to mount the camera to the baseplate.
2. Use a compatible screw, the 30MM Steel Ring to connect the clamp to the 30 mm gap in the center of the baseplate. See the pictures below.
3. Clamp the Trussmount Clamp to the mounting pole or mounting construction.
4. Connect all cables to the camera following **step 3** in 2. Mounting the Camera on page 13.
5. Place the cable cover following 3. Cable Cover on page 14 and 4. Cover Cap on page 14.

Figure 8: Mounting clamp and ring

Figure 9: Result

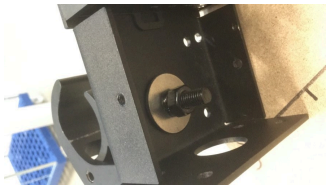

Mounting pole

Use a third party mounting adapter to connect the MT200 or the MT220 to the mounting pole.

If you use a mounting adapter in combination with the MT220, make sure that you use the hole in the **CENTER** of the baseplate. Otherwise the mount could tilt to one side.

Follow the instructions below to mount the MT200 or MT220 to a mounting pole:

1. Connect the third party mounting adapter to the baseplate of the MT200 or MT220.
2. Place the mounting adapter with the baseplate on the mounting pole.
3. Follow the steps in 2. Mounting the Camera on page 13 to mount the camera to the baseplate.
4. Place the cable cover following 3. Cable Cover on page 14 and 4. Cover Cap on page 14.

Figure 10: Mounting adapter

Figure 11: Result

MEASUREMENTS AND SPECS MT200

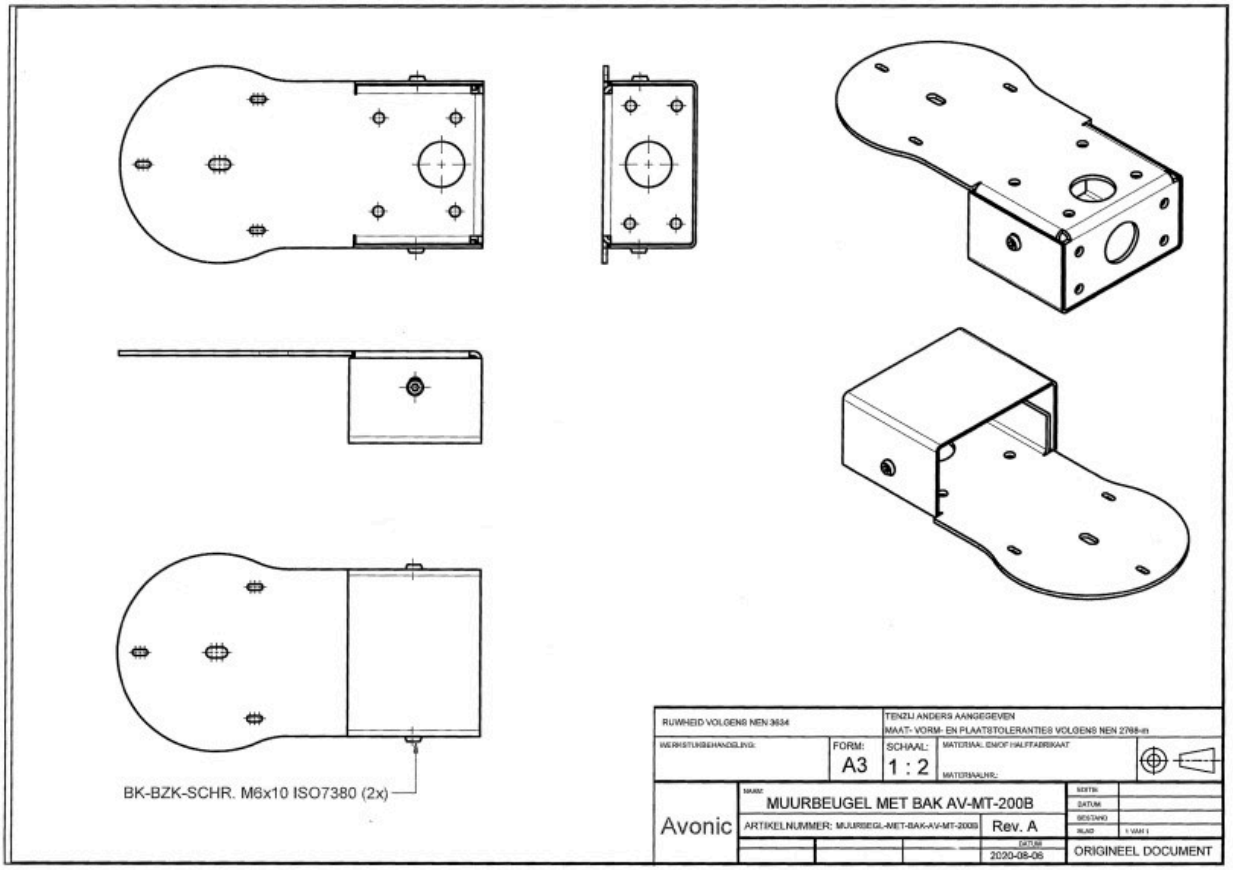

General Specifications

Color	White, Black
Dimensions product MM (W x H x D)	2370 x 60 x 130 mm (indicative)
Weight product	1060 Kg (indicative)
Included	MT200 Wall Mount, 1x Black 30MM Cover Cap, 1x 30MM Steel Ring, 1x 1/4"- UNC Pozidrive screw to fasten camera, M6*10mm 2x Allen Bolt screw, M3*6mm DIN9785 5x Pozidrive security screw

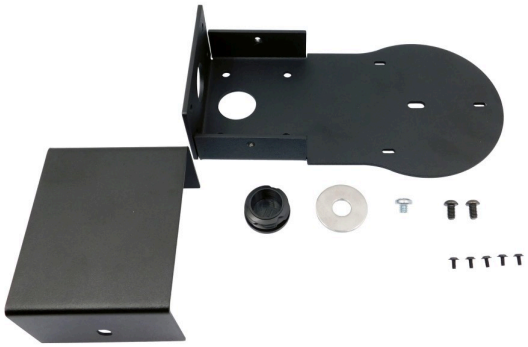

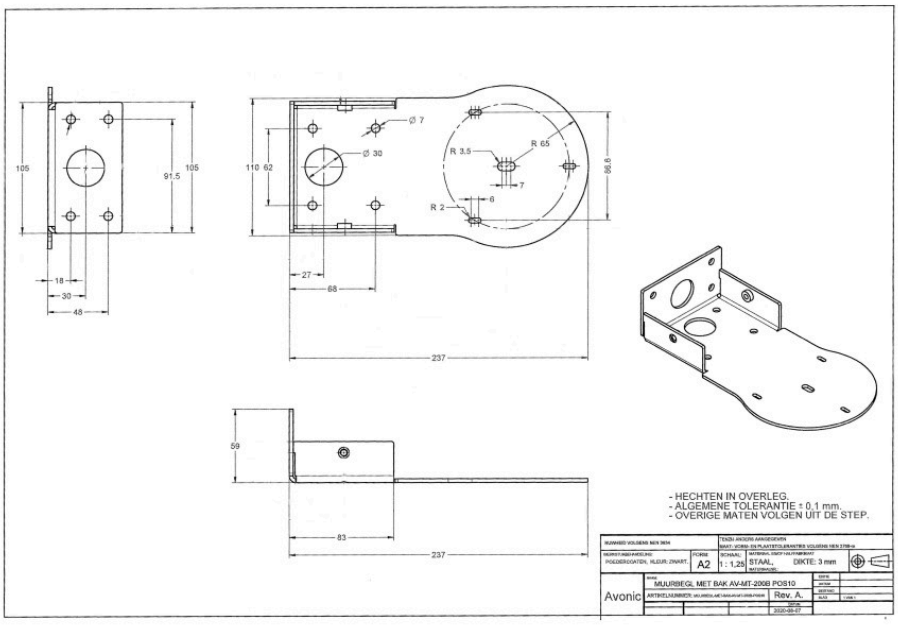

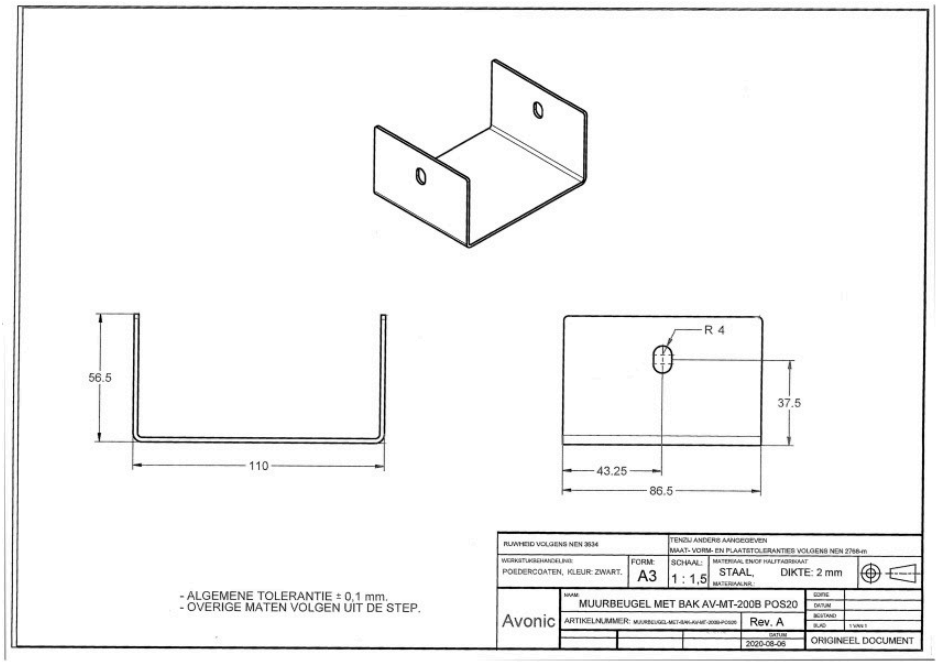

MEASUREMENTS AND SPECS MT220

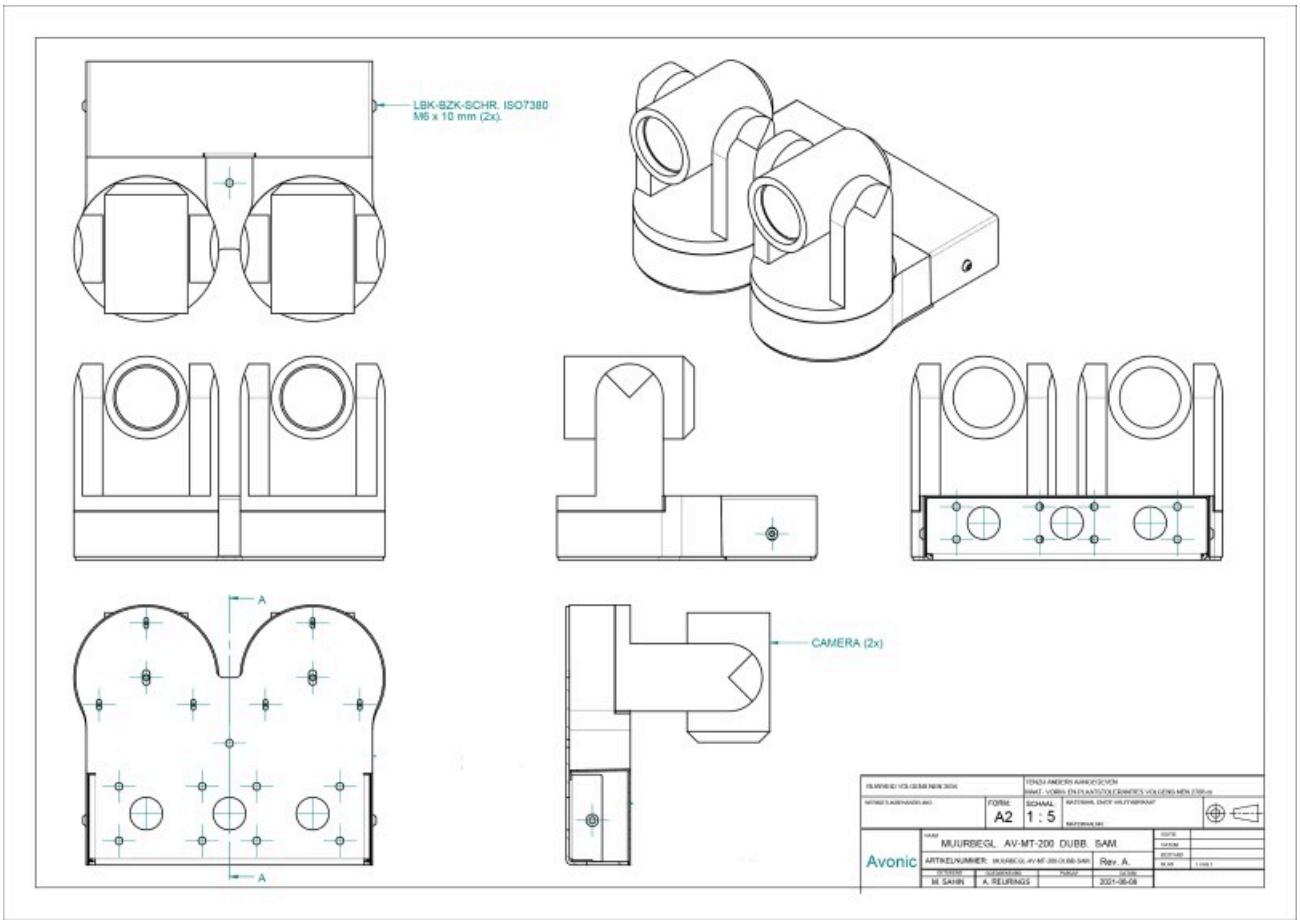

General Specifications

Color	White, Black
Dimensions product MM (W x H x D)	2370 x 57 x 2628 mm
Weight product	2.1 KG
Dimensions package MM (W x H x D)	2480 x 65 x 3400 mm
Weight package	2.4 KG
Included	MT220 Double Wall Mount, 3x Black 30MM Cover Cap, 1x 30MM Steel Ring, 2x 1/4''- UNC Pozidrive screw to fasten camera, M6*10mm 2x Allen Bolt screw, M3*6mm 8x Pozidrive security screw

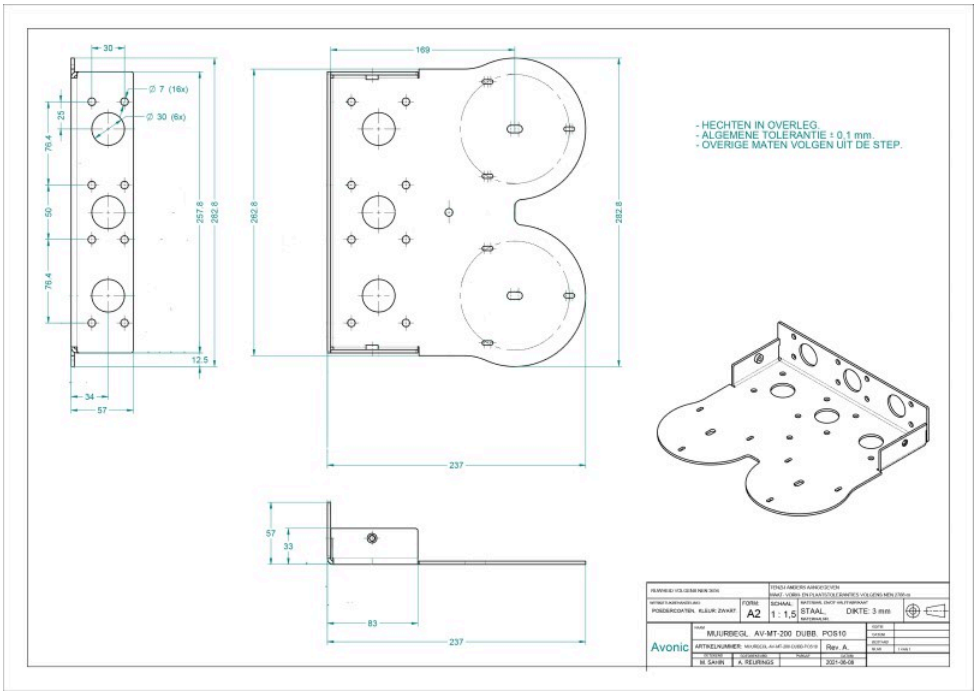

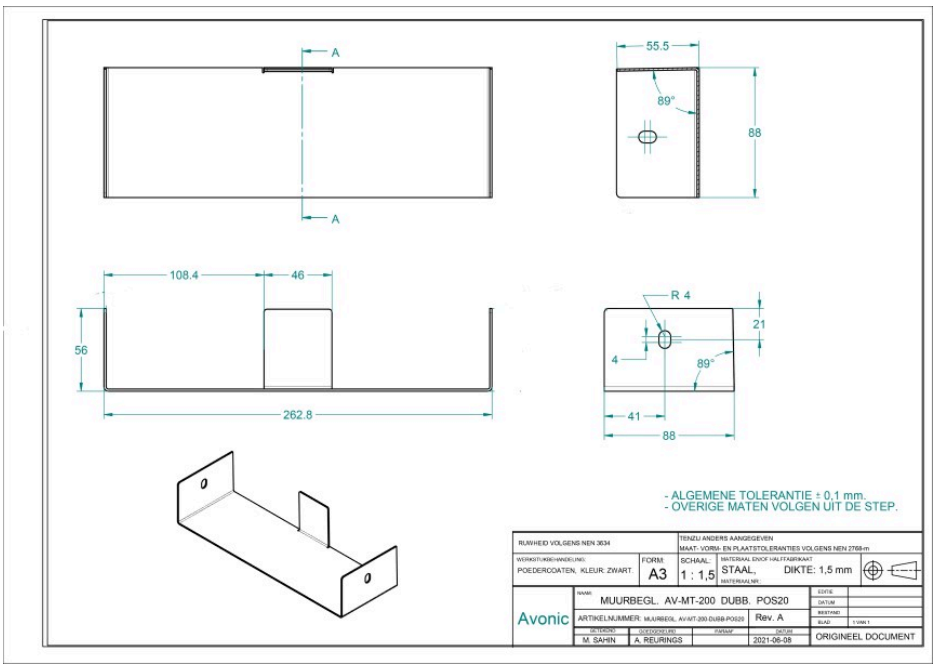

TRANSPORT AND STORAGE

The mount must be transported in its original packaging box. Inside the box, it is recommended to wrap the mount in the original plastic bag and to place it in the protective foam.

Specific guidelines apply to the environmental temperature and humidity when operating and storing the mount and the camera.

See 'Operating humidity' and 'Storage temperature' in the provided (camera) Datasheet for the applicable values.

DISPOSAL AND RECYCLING

In general, the term 'E-Waste' applies to items of all types of electrical and electronic equipment and its parts that have been discarded by the owner as waste without the intention of re-use.

Avonic outsources the disposal and recycling of its E-Waste mount and camera materials to the **Stichting Open**.

See https://stichting-open.org/ for more information about the disposal and recycling.

Index

Numerics

1/4" UNC 10, 13
30MM Steel Ring 10, 15

B

Baseplate 12

C

Cable Cover 14, 15
Cover Cap 10, 14

M

M3*6mm Pozidrive screws 10, 13
M6 Allen bolt 10, 14
Mounting Adapter 15
Mounting pole 15

T

Trussmount clamp 15

AVONIC

Avonic Wall Mount
AV-MT200, AV-MT220

© October 2022 • Version 1.2

Exportweg 11a • 2645 ED Delfgauw • The Netherlands
+31(0)15 7112 712 • info@avonic.com • www.avonic.com