Instruction manual - Main Unit Edition -

ATUC-50

Digital Wired Conference System

Gooseneck Microphone with LED Ring
ATUC-M43H/58H/M32L

Discussion Unit
ATUC-50DU/ATUC-50DUa

Interpretation Unit
ATUC-50INT

Control Unit
ATUC-50CU

Integration Unit
ATUC-50IU

Link Extender
ATLK-EXT165/ATLK-EXT25

Voting Unit
ATUC-VU

ATUC-IR

Hybrid Infrared Conference System

Gooseneck Microphone with LED Ring
ATUC-M43H/58H/M32L

IR Discussion Unit
ATUC-IRDU

Hybrid Control Unit
ATUC-IRCU

Hybrid Control Unit (Dante-Enabled)
ATUC-IRCUDAN

IR Transmitter Unit
ATUC-IRA

IR Distributor
ATUC-IRD

Charger
ATCS-B60

audio-technica

Table of Contents

Introduction 4

About this manual 4

About the information in this manual 4

About the configuration of this manual 4

About registered trademarks and copyrights 4

Included accessories for the ATUC-50CU 4

Included accessories for the ATUC-50IU 4

Included accessories for the ATLK-EXT165 4

Included accessories for the ATLK-EXT25 4

Included accessories for the ATUC-IRCU/IRCUDAN 5

Included accessories for the ATUC-IRDU 5

Included accessories for the ATUC-IRA 5

Included accessories for the ATCS-B60 5

System placement 5

Installing the CU(s) in a rack 5

Unbalanced connection 5

AC power cord connection 5

When cleaning the units 5

About This Conference System 6

Features 6

Features of ATUC-50/ATUC-IR system 6

About Audio-Technica LINK 6

Features of ATUC-50CU 6

Features of ATUC-50DU/50DUa/INT 6

Features of the ATUC-IRCU/IRCUDAN 6

Features of ATUC-IRDU 7

Features of ATUC-IRA 7

Features of ATUC-50IU 7

Features of ATLK-EXT165 7

Features of ATLK-EXT25 7

Features of ATUC-VU 7

Features of ATUC-M43H/58H/32L 7

Optional products (sold separately by Audio-Technica) 8

ATUC-50 System 9

Example of wired system connections 9

Part Names and Functions 10

ATUC-50CU 10

Front panel 10

Rear panel 12

ATUC-50DU/ATUC-50DUa 13

ATUC-50INT 14

Common to ATUC-50DU/INT 15

ATUC-M 15

ATUC-50IU 16

ATLK-EXT165 22

How to mount an ATLK-EXT165 23

ATLK-EXT25 25

Turning the Audio-Technica LINK A terminal ON/OFF 26

Set the power supply with the mode switch 27

Mounting an ATLK-EXT25 28

ATUC-VU 29

Changing settings from ATUC-50CU 30

Entering letters 31

Overview of the Interpretation Unit (ATUC-50INT) 32

Wired System Connections and Configuration 34

Connecting devices 34

1 Connecting 50DU/INT to 50CU 34

2 Connecting the 50DU/INTs together 35

3 Connecting the microphone ATUC-M to the 50DU/INT 48

4 Connecting an amplifier 48

5 Turning on the 50CU and testing 50DU operations 48

6 Connecting to a network 49

7 Connecting a computer or mobile device to a network 49

ATUC-IR System 51

Example of IR system connections 51

Part Names and Functions (ATUC-IR System) 52

ATUC-IRCU/ATUC-IRCUDAN 52

Front panel 52

Rear panel 54

ATUC-IRDU 55

Range of light reception 57

ATUC-M 57

ATUC-IRA 58

ATUC-IRD 59

ATCS-B60 60

Using the Charger 61

Using Dante 62

Connecting IRCUDAN in a Network 62

Changing settings on the ATUC-IRCU/ATUC-IRCUDAN 65
Entering letters 66

IR System Connections and Configuration 67

Connecting devices 67
1 Connecting IRA and IRCU 67
2 Connecting the microphone ATUC-M to the IRDU 67
3 Starting the IRDU 68
4 Setting Device ID for IRDU 68
5 Set up the IRDU so it can be used 69

ATUC-50/IR Hybrid System 70

Example of hybrid system connections 70

Hybrid System Connections and Configuration 71

About Wired System and IR System Connections and Configuration 71

Information 74

Troubleshooting 74
ATUC-50CU/ATUC-IRCU/ATUC-IRCUDAN 74
ATUC-IRCUDAN 75
ATUC-50DU/DUa/INT 75
ATUC-50IU 76
ATLK-EXT165 76
ATLK-EXT25 77
ATUC-IRDU 77
ATUC-IRA 78

Error messages 79

Specifications 83

ATUC-50CU specifications 83
General specifications 83
Input/output specifications 84

ATUC-50DU/DUa/INT specifications 85
General specifications 85
Input/output specifications 86

ATUC-50IU specifications 87
General specifications 87
Input/output specifications 88

ATLK-EXT165 specifications 89
General specifications 89

ATLK-EXT25 specifications 89
General specifications 89

ATUC-VU specifications 89
General specifications 89

ATUC-M43H/58H specifications 90

ATUC-M32L specifications 91

ATUC-IRCU/ATUC-IRCUDAN specifications 92
General specifications 92
Input/output specifications 93

ATUC-IRDU specifications 94
General specifications 94
Input/output specifications 94

ATUC-IRA specifications 95
Input/output specifications 95

ATUC-IRD specifications 95

ATCS-B60 specifications 95

Introduction

About this manual

About the information in this manual

The images and screenshots shown in this manual may differ from the actual product.

About the configuration of this manual

In this manual, the "Main Unit Edition", there is information about the digital wired conference system ATUC-50 and the hybrid infrared system ATUC-IR products.
For how to use Web Remote, see the "Web Remote Edition".
For how to install ATUC-IRs, see the "ATUC-IR Installation Edition".

Device names

The device names are abbreviated as follows.

- 50CU: "Control Unit" ATUC-50CU
- 50DU: "Discussion Unit" ATUC-50DU/ATUC-50DUa*
- 50INT: "Interpretation Unit" ATUC-50INT
- ATUC-M: "Gooseneck Microphone with LED Ring" ATUC-M43H/ATUC-M58H/ATUC-M32L
- 50IU: "Integration Unit" ATUC-50IU
- EXT165: "Link Extender" ATLK-EXT165
- EXT25: "Link Extender" ATLK-EXT25
- VU: "Voting Unit" ATUC-VU
- IRCU: "Hybrid Control Unit" ATUC-IRCU
- IRCUDAN: "Hybrid Control Unit (Dante-Enabled)" ATUC-IRCUDAN
- IRDU: "IR Discussion Unit" ATUC-IRDU
- IRA: "IR Transmitter Unit" ATUC-IRA
- IRD: "IR Distributor" ATUC-IRD
- B60: "Charger" ATCS-B60

* The ATUC-50DUa is a conference microphone unit that is compatible with the ATUC-VU (Voting Unit).

Some abbreviated names are used as follows.
CU: When indicating the ATUC-50CU, ATUC-IRCU, and ATUC-IRCUDAN collectively
DU: When indicating both the ATUC-50DU/ATUC-50DUa and the ATUC-IRDU
EXT: When indicating both the ATLK-EXT165 and the ATLK-EXT25

Symbols

›	Indicates the page(s) where you can find more detailed or related information.
NOTICE	Indicates a risk that may result in malfunction or damage to the device.
	Indicates supplementary information as well as tips & advice for operations.
[ ]	Indicates menu items on the Web Remote screen.

Operations on mobile devices

Operations in this manual assume that you are using a computer as a control device. Alternatively you can use a mobile device such as a tablet. Instead of clicking or double-clicking, operate the application by tapping.

About registered trademarks and copyrights

- Apple, the Apple logo, iPad and Mac OS are trademarks of Apple Inc., registered in the U.S. and other countries. App Store is a service mark of Apple Inc.
- Google Play and the Google Play logo are registered trademarks or trademarks of Google Inc.
- Other product names, service names, logos and/or company names used in this manual are trademarked and copyrighted properties of their respective owners and/or licensors.
  In this manual, the TM and ® mark may not be specified.

Included accessories for the ATUC-50CU

- AC power cord
- Euroblock connector (9 pieces)

Included accessories for the ATUC-50IU

- Euroblock connector (13 pieces (Green x 3, Black x 10))

Included accessories for the ATLK-EXT165

- Euroblock connector
- Power cable
- Table mount kit (Table mount x 2, Screw x 4)

Included accessories for the ATLK-EXT25

- Euroblock connector (2 pieces)

Included accessories for the ATUC-IRCU/IRCUDAN

- AC power cord
- Euroblock connector (9 pieces)

Included accessories for the ATUC-IRDU

- Rechargeable battery cover (2 pieces)

Included accessories for the ATUC-IRA

- Mounting bracket (1 piece)
- Fastening screws for mounting bracket (2 pieces)

Included accessories for the ATCS-B60

- AC adapter

System placement

Installing the CU(s) in a rack

Rack requirements for the CU

- EIA standard compatible 19-inch rack
- 1U-size rack mounting
- Rack equipped with safety guardrails to support the CU and a board on which the CU is to be placed

When installing the CU(s) in a rack, keep the temperature within the rack below 45°C (113°F). High temperature may damage the internal components, causing a malfunction.
Leave a space of 10cm or more on each side (top, right and left, rear) between the CU and other devices or the rack.

Rack mounting angles are fixed to the CU using the following screws. When using screws other than those listed here, check the specifications.

- S TIGHT tapping screws with nominal diameter 4×6mm*
  * Substitutable for M4×6mm machine screws

Unbalanced connection

Since induction noises tend to occur due to difference in electric potential of chassis:

- Keep the chassis between each device at the same electric potential.
- Use the same power system.
- Connect to the GND (ground) terminal or chassis ground of each device.

AC power cord connection

Be sure to connect the AC power cord into a properly grounded wall outlet. Improper grounding can cause electrical shock.

When cleaning the units

Do not use any solvents or chemicals such as benzine, thinner, alcohol or electrical contact cleaner and protector. Doing so may cause deformation, damage and malfunction of the units.

About This Conference System

Features

Features of ATUC-50/ATUC-IR system

- Audio processing by the feedback processor and the like enables clear-sounding conversations
- Up to 6 interpretation units (ATUC-50INT) can be connected.
- The maximum number of discussion units (ATUC-50DU), integration units (ATUC-50IU), and interpretation units (ATUC-50INT) that can be connected on the IRCU is a total of 500 units (IRCU x 1 + 2 CU link units, 200 IRDU units, and 300 50DU units) and on the 50CU is a total of 300 units (for 3 CU link units).
- Either daisy-chain or ring connection can be made with Cat5e or higher cables (shielded cables with conductor size of 24AWG or higher in diameter).
- 3 selectable conference modes: Free Talk Mode, Request Talk Mode, and Full Remote Mode
- 2-language interpretation, 3-language interpretation, and 3-language relay interpretation are supported (ATUC-50INT)
- The recording function enables you to record audio onto a USB device (mass storage device)
- Controllable using Web Remote and an external control device
- Design with future expansion considered
- Layout of hybrid infrared conference system can be easily changed and operations are flexible.

About Audio-Technica LINK

The system uses Audio-Technica's proprietary LINK format for power supply and signal transmission between the control units and discussion units, etc.

Audio-Technica LINK is compatible with the Ethernet standards and allows a simple installation using universal Cat5e or higher cable connections. (A shielded cable with conductor size of 24AWG or higher in diameter) Transmission of high-speed signals with low-latency allows stable control and uncompressed audio signal transmission.

Features of ATUC-50CU

- Power supply and control is possible for a maximum of 100 discussion units (ATUC-50DU) (depending on the cable lengths ATLK-EXT165 may be required)
- Up to 300 discussion units (ATUC-50DU) can be connected by cascade-connection
- 4 configurable balanced matrix output plus 1 unbalanced output that outputs the same audio as Output 1
- 2 Mic/Line inputs, 2 monaural AUX inputs, and 2 return inputs
- 2 return channels are available for both bilingual simultaneous interpretation and the language of the floor holder
- Conference mode: Free Talk, Request Talk, and Full Remote
- Priority mode: First-press priority and later-press (FIFO, LIFO) priority
- Talk mode: All Button Toggle, All Push to Talk, All Voice
- Web Remote enables you to easily change settings and control attendees' right to talk during conference
- Up to 4 channels (WAV: up to 4 channels, MP3: up to 2 channels) can be recorded on a USB device (mass storage device)
- Audio processing by the feedback suppressor and the like enables the control unit to deliver high-quality sound
- Design with future expansion and renewal considered

Features of ATUC-50DU/50DUa/INT

- An LED ring enables power supply via 3-pin balanced connector while offering both high sound quality and user flexibility
- Standard 3-pin microphones can be connected
- A microphone pre-amplifier using discrete transistors reduces noise; moreover individual gain is adjustable
- A high-quality and high-resolution speaker
- Designed for the high sound qualities of 24 bit/48 kHz
- Equipped with multiple independent indicators (microphone ring LED, (talk) button, multicolored LEDs on rear side of discussion unit (ATUC-50DU))
- High-visibility indicators associated with the headphone volume adjustment buttons and monitor channel selection buttons
- Optional removable bottom weight for improved stability
- 2 RJ-45 terminals for connecting discussion units (ATUC-50DU); 1 expansion RJ-11 terminal for future expansions
- 1 headphone output jack with a monitoring channel switch function

Features of the ATUC-IRCU/IRCUDAN

- Updated model has expanded FPGA, and the basic functions are the same as the 50CU
- Supports operation on wired conference systems, infrared conference systems, and hybrid conference systems
- One system can control up to 300 discussion units (100 50DU units and 200 IRDU units, plus ATLK-EXT165 may be required depending on the number of connected units, cable lengths, and number of antennas)
- Up to 500 conference microphones can be connected in cascade connections (300 50DU units and 200 IRDU units)
- Dante equipped models are also available

Features of ATUC-IRDU

- One IRDU unit is shared by two people to support 2-person conversation mode. Equipped with two headphone outputs with independent volume adjustments
- Equipped with two multifunction buttons that can be flexibly changed as appropriate to user's applications

Features of ATUC-IRA

- White IR cover and slender style provide subtle design that can be installed in a variety of locations
- Using BNC terminal makes it possible to do multiplex transmissions by connecting one cable
- Reliable design prevents installation mistakes with LEDs that indicate power supply status

Features of ATUC-50IU

- Discussion units that can be embedded in the ATUC-50 system
- Configure the system simply by connecting the microphones, speakers, headphones, etc.
- GPIO control terminal built in for monitoring conditions and controlling external devices
- Equipped with 2 RJ-45 terminals for connecting discussion units (ATUC-50DU), etc.
- Designed for the high sound qualities of 24 bit/48 kHz
- Integration unit (ATUC-50IU) can be set from the Web Remote for the chairperson/delegate names
- Conference Mode and volume can be set for each integration unit (ATUC-50IU)

Features of ATLK-EXT165

- Connects to any Audio-Technica device, such as a control unit (ATUC-50CU), or discussion unit (ATUC-50DU), and is equipped with two RJ-45 terminals that can expand the discussion system
- Remote mode that automatically starts from the control unit (ATUC-50CU)
- Has a standalone mode that can be started by operating the front panel
- Equipped with GPO terminal that notifies external devices when an overcurrent (2.6 A) is detected in the power supplied from RJ-45 terminals

Features of ATLK-EXT25

- Connects to Audio-Technica devices, such as a control unit (ATUC-50CU), or discussion unit (ATUC-50DU), and is equipped with two RJ-45 terminals that can be used to expand the discussion system
- Has a standalone mode that allows the device to be started directly
- Remote mode (Remote 1) that starts from the control unit (ATUC-50CU)
- Remote mode (Remote 2) that starts from the GPI control
- Equipped with GPO terminal that notifies external devices when an overcurrent is detected in the power supplied from RJ-45 terminals
- Supports PoE/PoE+ power supply
- Supports power supplied from AC adapter (sold separately by Audio-Technica)

Features of ATUC-VU

- The voting unit is compatible with the ATUC-50DUa and can be used with the ATUC-50 and ATUC-IR systems
- Power can be supplied by the ATUC-50DUa extension terminal (RJ-11 Modular Terminal)
- All buttons and all LEDs can be flexibly controlled and functions can be assigned from the IP Control
- Equipped with NFC card reader function, ID numbers can be transmitted through the IP Control
- Can be used as expansion panel when connected to ATUC-50DUa for which Priority settings are turned on (chairman and other functions can be assigned)
- Maximum 300 Voting Units can be used (when 3 CU Links are connected) on the ATUC-IRCU system; maximum 300 Voting Units can be used (when 3 CU Links are connected) on the ATUC-50CU system

Features of ATUC-M43H/58H/32L

- Equipped with an LED ring that enables power supply via 3-pin balanced connector while offering both high sound quality and user flexibility
- Structural design reduces vibration between microphone connectors and discussion units
- Adopted double layer pop filter
- Improves RF measures against external radio waves
- Double gooseneck design makes installation flexible (ATUC-M43H and ATUC-M58H)
- Super directional design allows capture of distant sounds (ATUC-M32L)

Optional products (sold separately by Audio-Technica)

Model number	Name	Use
ATUC-DUWT	DISCUSSION UNIT WEIGHT PLATE	Use this to improve the stability of discussion unit installation.
AT8643	RACK MOUNT KIT	Use this when rack mounting half-rack sized products, such as link extenders (ATLK-EXT165).

ATUC-50 System

Example of wired system connections

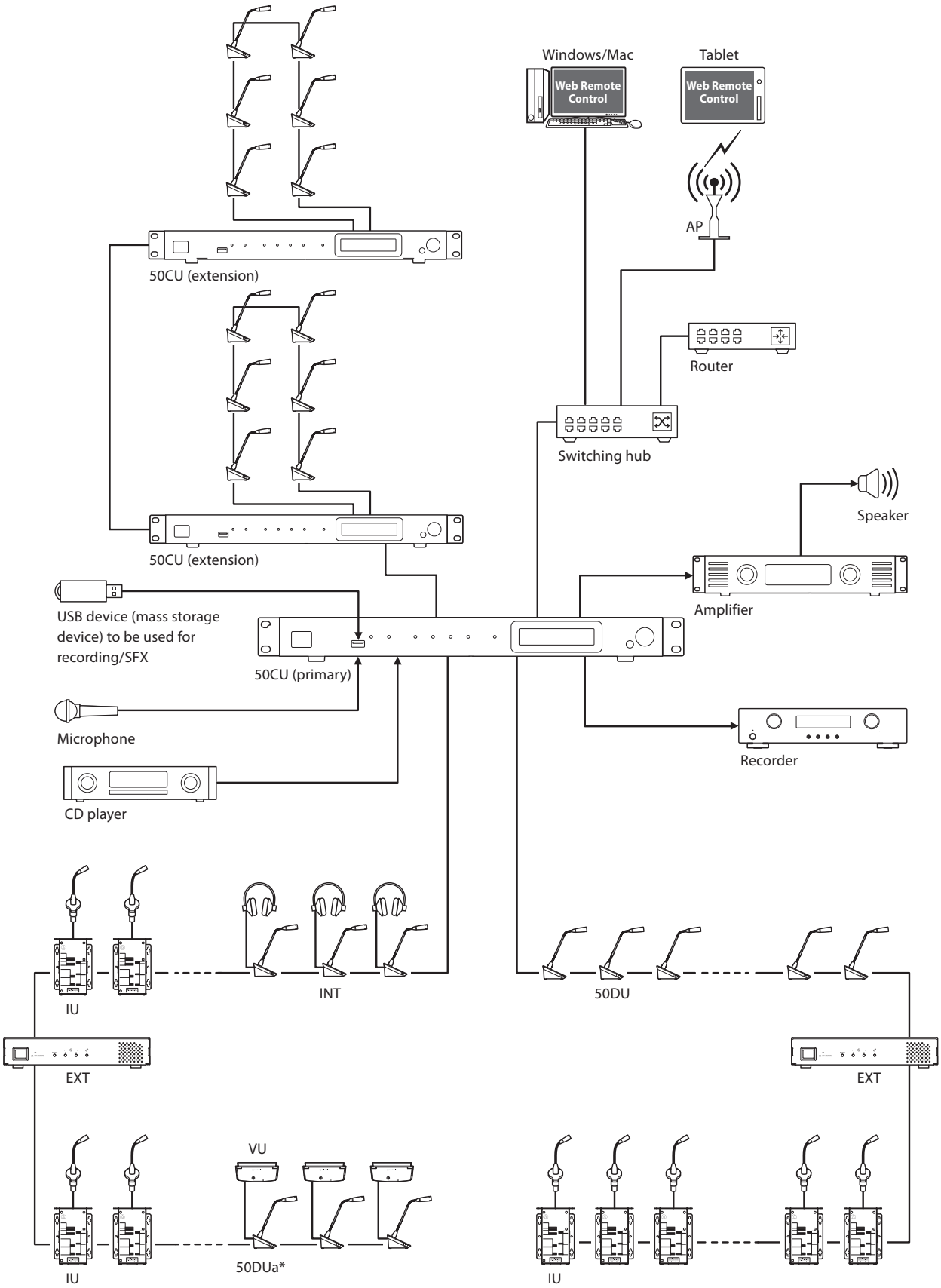

The number of connectable units differs depending on the system configuration that you are using. For more details, refer to › page 36.

* The VU can be connected to DUa only.

Part Names and Functions

ATUC-50CU

Front panel

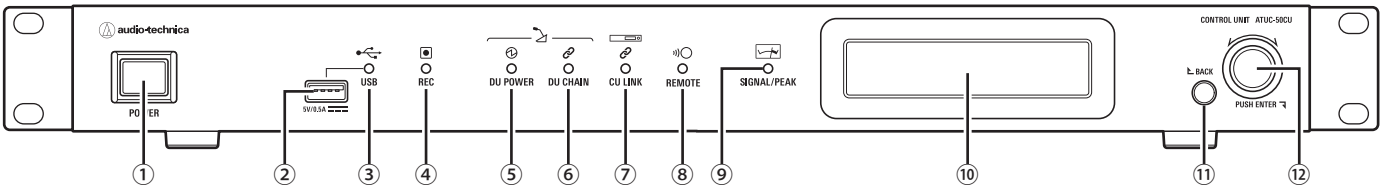

① Power switch

Turns the power of the 50CU on and off.

② USB terminal

The following operations are possible by connecting a USB device (mass storage device) such as a USB flash drive or USB hard drive.

- Recording sound
- Playing buzzer and chime
- Importing/exporting preset data
- Firmware update

NOTICE
- Supports FAT16 and FAT32 file systems
- Maximum storage capacity: 2TB
- Maximum file size: 2GB
- Does not support USB hubs.
- Do not use extension cables.
- Do not attempt to use USB devices (mass storage devices) that have been cracked, deformed or repaired using adhesive tape or the like.
- Do not save or create any files or folders unnecessary for this system on the USB device (mass storage device); doing so may affect system operations.
- The 50CU is not compatible with USB devices (mass storage device) with special functions such as a security function.

③ USB access indicator

Indicates the connection status of the USB device (mass storage device).

- In an access state: lit green

NOTICE
- Do not remove the USB device (mass storage device) while the indicator is lit green; doing so may destroy data.

④ REC (recording) indicator

Indicates the recording status.

- In a recording state: lit green
- In a recording-pause state: blinks green
- While not recording: remains off

NOTICE
- If you remove the USB device (mass storage device) while in a recording state or recording-pause state, the recorded file may not be written correctly. Do not remove the USB device (mass storage device) during recording.
- We recommend recording important content simultaneously on another recording device as a backup.

⑤ DU POWER (DU power supply) indicator

- In a normal state: lit green
- In an abnormal state (such as when a voltage drop occurs in the 48-V output system): blinks green
- In a 50DU/INT disconnected state: remains off

⑥ DU CHAIN indicator

- In a normal state: lit green
- In an abnormal state (such as when 50DU communications fail): blinks green
- In a 50DU/INT disconnected state: remains off

⑦ CU LINK indicator

- In a CU Link state: lit green
- In an abnormal state (such as when 50CU communications fail): blinks green
- In a 50CU link cut-off state: remains off

⑧ Remote (remote control) indicator

- In a communication state: lit green
- In an abnormal state (such as when failing in external transmission retry): blinks green
- In a non-communication state: remains off

⑨ SIGNAL/PEAK indicator

Indicates the audio signal level as follows:

- 60dBFS or higher: lit green
- 20dBFS or higher: lit amber
- 2dBFS or higher: lit red

Adjust the audio signal level such that the indicator will not light red.

⑩ Display

⑪ BACK button

Returns to the previous or upper screen/item.

Press and hold this button to return to the HOME screen from any screen.

⑫ **Jog dial/ENTER button**

Rotate the jog dial to select the desired item and then press the ENTER button to confirm.
Rotating the jog dial also adjusts the setting values.

- **Locking the operation buttons (Key Lock function)**
  Press the BACK button and ENTER button simultaneously for over 2 seconds to activate the Key lock function, and thus lock all front panel operations except for the Power switch.
- **Unlocking the operation buttons**
  When the operation buttons are locked, press the BACK button and ENTER button simultaneously for over 2 seconds to unlock the operation buttons.

Display and jog dial operations:

HOME screen

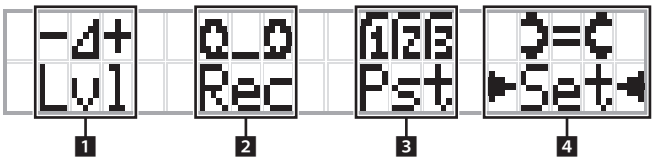

The item with ▸ ◂ is the currently selected item.
By rotating the jog dial, move ▸ ◂ to select the operation you want to perform and then press the ENTER button.

1 Master level adjustment (Lvl)

Master level
-50 -40 -30 -20 -12 -6 0 6 12 Peak (dBu)

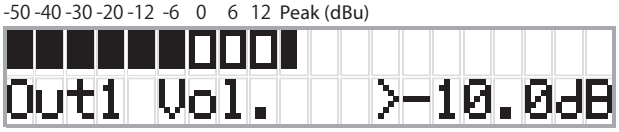

- Rotate the jog dial to adjust the CU output level (OUTPUT 1).
- While pressing the ENTER button, rotate the jog dial to adjust the level in 10-step increments.
- Be sure that the Peak indicator does not light up while adjusting the level.

2 Recording operations (Rec)

R (Remaining recording time)/*E* (Elapsed recording time) display
-50 -40 -30 -20 -12 -6 0 6 12 Peak (dBu)

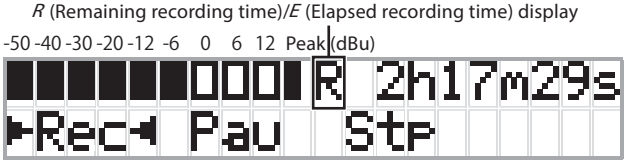

- Rotate the jog dial to select *Rec* (Start recording)/ *Pau* (Pause)/*Stp* (Stop)/*R* or *E* (Recording time display) and then press the ENTER button to confirm.
- Select the time display on the top right side of the screen using the jog dial and then press the ENTER button to switch the display between *R* (Remaining recording time)/*E* (Elapsed recording time).
- To adjust the recording level, move ▸ ◂ to the recording level meter at the top left of the screen to display *Rec Lvl* and then press the ENTER button to enter recording level adjustment mode. Rotate the dial to adjust the recording level being sure that the Peak indicator does not light up.
- While pressing the ENTER button, rotate the jog dial to adjust the level in 10-step increments.

3 Conference preparation (Pst)

- [1] *Recall Presets*: Rotate the jog dial to move “>” to the item you want to recall and then press the ENTER button to confirm.
- [2] *Conf. Setup*: Change or check the conference settings. Rotate the jog dial to move “>” to the item you want to change or check and then press the ENTER button to confirm.

Pst Menu Items:

Settings can also be configured via Web Remote. The item names in parentheses ( ) are used for Web Remote.

[1] *Recall Presets*
[2] *Conf. Setup*
01 Conference Mode (Conference Mode)
02 NOM (Number of Open Mics)
03 Auto Mic Off (Auto Mic OFF)
04 Override Mode (Override Mode)
05 Max Queue (Maximum in Queue)
06 MicON Trigger (Mic ON Trigger / Mic ON Trigger for Priority)
07 MicON Hold Time (Mic ON Hold Time)
08 Interrupt Option (Interrupt Option)

- Items that can be configured from [2] *Conf. Setup* differ depending on the conference mode.
- For details on items, see “Menu items” in the Web Remote Manual.

4 Configuring settings (Set)

Rotate the jog dial to move “>” to the desired item or value and then press the ENTER button to confirm.
For details on setting items, see “Set Menu Items” (› page 30).

Rear panel

* The serial number label is located on the top panel.

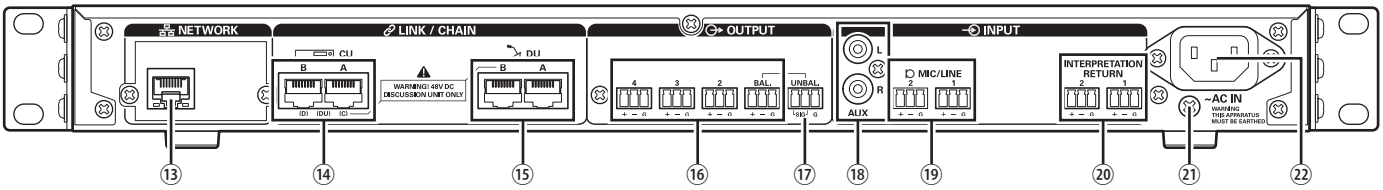

NOTICE
- Refer also to the instruction manuals supplied with the external devices.
- Be careful NOT to connect the Ethernet cable from your network device to the CU LINK terminal or DU CHAIN terminal. This can cause damage to the connected device.

⑬ NETWORK terminal
- RJ-45
- Use for connecting to a local area network when controlling from an external device via the Web Remote Control or IP remote function (‣ page 49)

⑭ CU LINK A/B terminals, DU CHAIN C/D terminals
- RJ-45
- Use for cascading multiple 50CUs. (‣ page 47)
- You can also configure these terminals as 50DU/IU/INT terminals. (‣ page 35)

⑮ DU CHAIN A/B terminals
- RJ-45
- Use for connecting 50DU/IU/INT. You can daisy-chain multiple 50DU/IU/INTs as well as connect multiple 50DU/IU/INTs in a ring using the A/B terminals.

- By cascade-connecting multiple 50CUs, up to 300 50DU/IU/INTs can be connected. However, there is a maximum of 6 INTs. (‣ page 47).

⑯ Analog output (balanced) terminals: OUTPUT 1-4 (BAL)
- Euroblock
- Pin arrangement: “+” Hot/“–” Cold/“G” GND

⑰ Analog output (unbalanced) terminals: OUTPUT1 (UNBAL)
- Euroblock
- Pin arrangement: “SIG” Signal (2 systems)/“G” GND

⑱ Analog input (unbalanced) terminals: INPUT (AUX)
- RCA

⑲ Analog input (balanced) terminals: INPUT (MIC/LINE 1-2)
- Euroblock
- Pin arrangement: “+” Hot (supports phantom power)/ “–” Cold (supports phantom power)/“G” GND
- The input type can be switched between MIC and LINE

⑳ Analog input (balanced) terminal: INPUT (INTERPRETATION RETURN 1-2)
- Euroblock
- Pin arrangement: “+” Hot/“–” Cold/“G” GND
- Inputs audio signals from simultaneous interpretation system

㉑ Ground screw
Since the supplied AC power cord has a three-pronged plug, as long as your AC power wall outlet is grounded properly, the CU will also be grounded properly.

㉒ AC Inlet (AC IN)
Connect the supplied AC power cord.

NOTICE
- Do not plug in the AC power cord until all other connections, including 50CU extension and 50DU/IU/INTs, have been completed.
- Be sure that the CU is securely grounded to a single ground point. Grounding to multiple ground points can cause ground loops, resulting in noise generation such as a humming noise.

ATUC-50DU/ATUC-50DUa

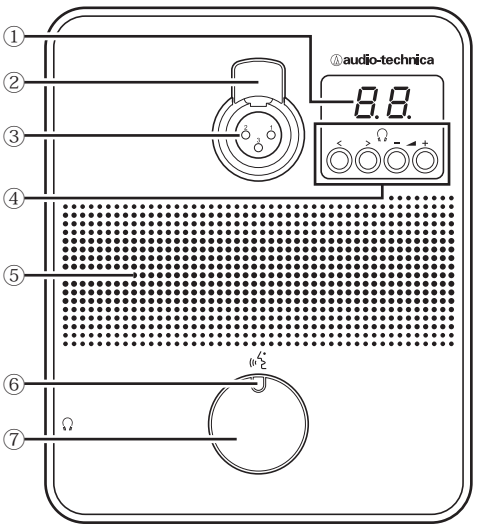

① Display

When changing monitor channel or adjusting the volume level, the currently set value is displayed.

② Microphone release lever

③ Microphone jack

Connect a microphone.

- ES925/XLR and a typical 3-pin XLR type microphone, as well as the ATUC-M series microphones, can be connected.

④ </> Monitor channel selection buttons

When operating the </> monitor channel selection buttons, the currently selected monitor channel is shown on the display ①.

FL: Monitors speech from the floor channel.

01-03: Monitors speech from groups 1 to 3. Speech interpreted by interpretation units is added to the speech from groups 1 to 3 when INTs are connected on the same system.

–/+ Headphone volume adjustment buttons

When operating the –/+ headphone adjustment buttons, the current volume level (0 to 20) is shown on the display ①.

⑤ Built-in speaker

Outputs conference audio.

⑥ (talk) LED

Displays DU talk status.

- While talking: lit red
- When requested to talk (in standby mode): blinks green
- When talk request is rejected: blinks green (quickly blinks 4 times)

- The LED colors can be changed. See the Web Remote Edition.

⑦ (talk) button

Press this button to send a request to talk. Press the button again to finish talking or cancel the request to talk. DUs designated as a priority DU can cut other DU speakers short and mute other DUs by pressing this button.

Operations when the (talk) button is pressed briefly:

Conference mode	Current state	Mic ON Trigger mode		
		All Button Toggle	All Push to Talk	All Voice
Free Talk	Talk OFF	Talk ON	Press and hold to talk	- (Not acceptable)
	Requesting to talk	Cancel request		
	Talk ON	Talk OFF		
Request Talk	Talk OFF	Request to talk	- (Not set)	Request to talk
	Requesting to talk	Cancel request		Cancel request
	Talk ON	Talk OFF		Talk OFF
Full Remote	-	- (External control only)		

- On priority DUs, operations of the priority DUs are same as in Free Talk Mode regardless of the conference mode.

Operations when the (talk) button is pressed and held:

Only for Priority DUs with [Can Cut/Mute] set to on

Current state	Mic ON Trigger mode				
	All Button Toggle	All Push to Talk	All Voice	All Button Toggle/ All Push to Talk/ All Voice	
	Press the button			Cut mode	Mute mode
				Press and hold the button for over 2 seconds	
Talk OFF	Talk ON	Press and hold to talk	- (Not acceptable)	Talk ON(*1)	Talk ON(*2)
Talk ON	Talk OFF	- (Not set)		Talk ON stays active(*1)	Talk ON stays active(*2)

*1 All specified DUs will be in Talk OFF state.

*2 All specified DUs will be in mute state.

ATUC-50INT

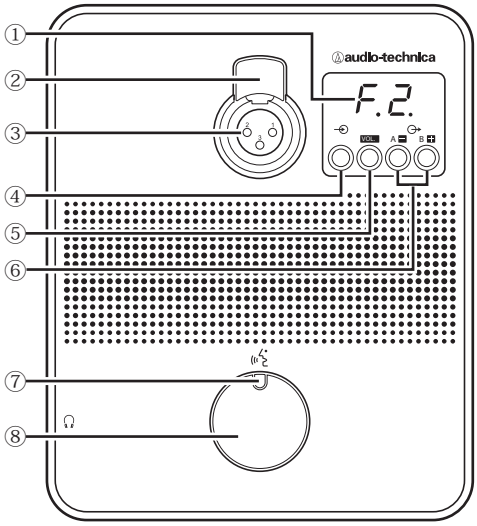

① Display

- Character on the left: Displays the current monitor channel.
  F: Monitors speech from the floor channel (speech from all meeting participants).
  1: Monitors speech from language group 1.
- Digit on the right: Displays the language group (1 to 3) assigned to the INT output.

When adjusting the volume level, the set value is displayed.

② Microphone release lever

③ Microphone jack

Connect a microphone.

- ES925/XLR and a typical 3-pin XLR type microphone, as well as the ATUC-M series microphones, can be connected.

④ Monitor channel selection button

Switches the speech from the floor channel and the speech from language group 1 each time it is pressed.

⑤ VOL. Headphone volume adjustment button

When operating this button, the current volume level (0 to 20) is shown on the display ①. The volume is adjusted by operating the ＋/－ buttons ⑥ while in this state.
Operating this button while the volume level is displayed takes you back to the monitoring channel display.

⑥ A / B Interpretation languages selection buttons (only available in bi-directional interpretation)

This function is only available when bi-directional interpretation has been selected. (Outgoing language A/Outgoing language B)
Switches the location of the interpretation speech being output according to the interpretation pattern.

⑦ (Talk) LED

Displays INT talk status.

⑧ (Talk) button

Press this button to talk. Press the button again to finish talking.

Common to ATUC-50DU/INT

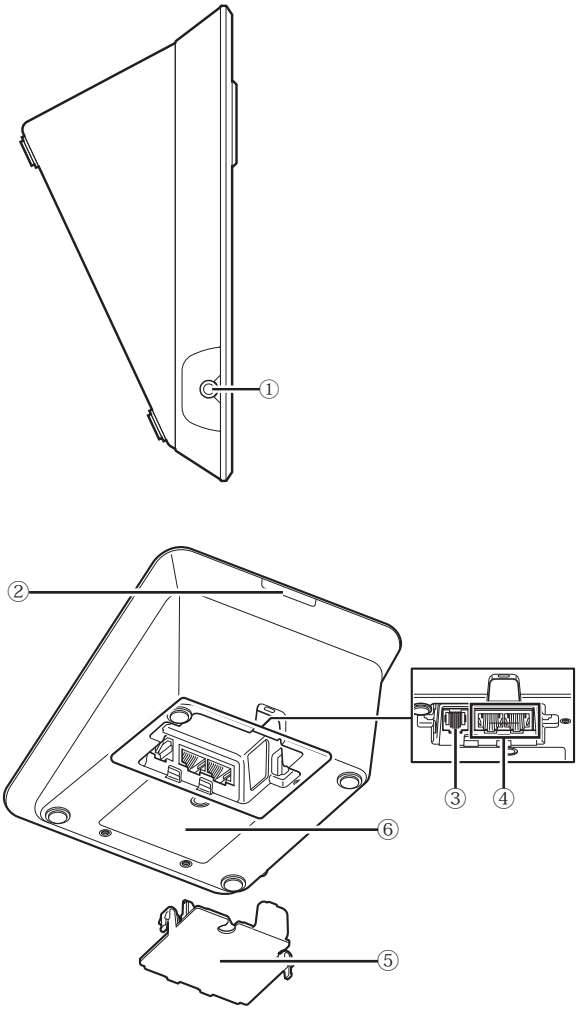

① **Headphone jack**
Speech from the selected monitor channel is output.

② **Rear LED**
The LED color can be set for each 50DU. This is useful when dividing 50DUs into groups by color. The LED color can be changed from Web Remote.

NOTICE • Color settings cannot be done for INTs. The settings stay at their default.

③ **Extension terminal**
Port for connecting a VU. Supports connection to 50DUa only.

④ **DU/CU connection terminals (› page 34)**

⑤ **Bottom cover**
Covering the terminals protects them from dust and also prevents cables from becoming unplugged. Therefore, after connecting cables to each terminal, be sure to attach the bottom cover.

⑥ **Serial number**

ATUC-M

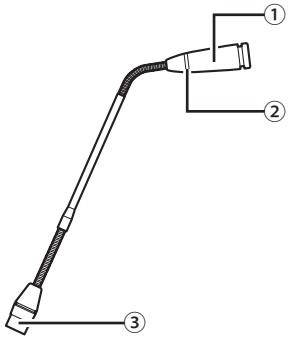

① **Microphone**

② **Ring LED**
Lights red when the microphone is activated.
Blinks red while waiting to talk.

③ **Connector**

ATUC-50IU

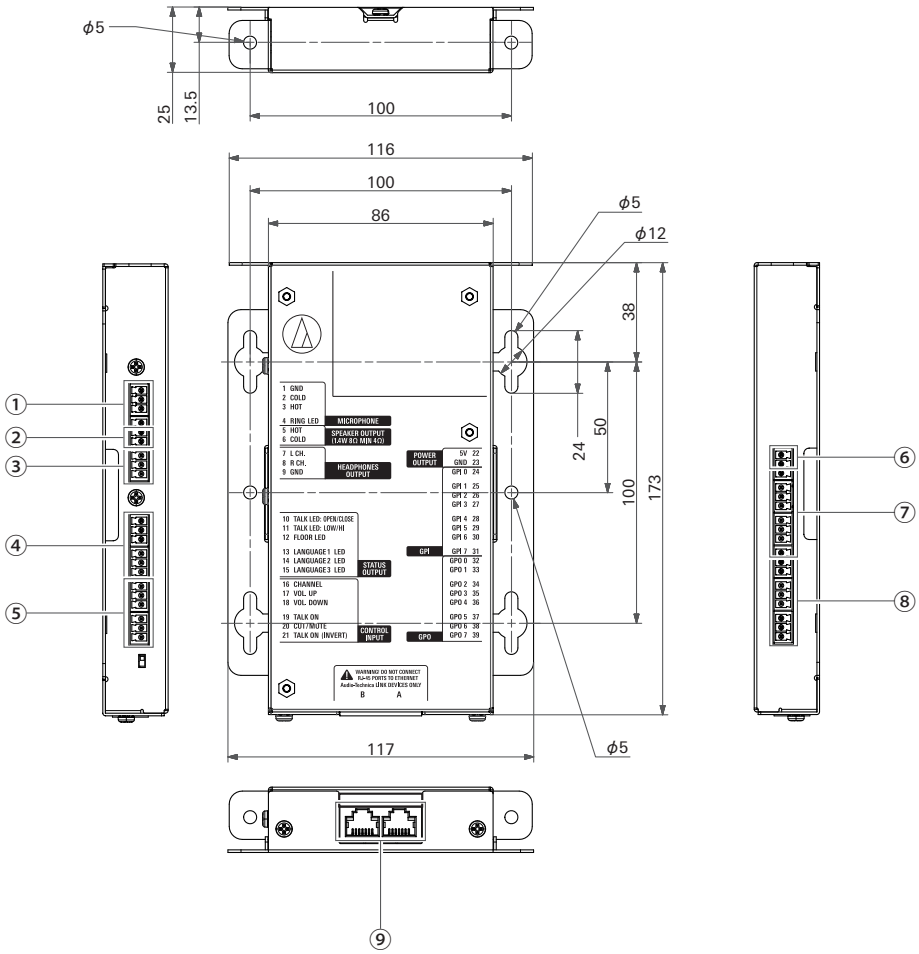

Because the IU is intended to be embedded in a table, etc., when it is used, the user interfaces, such as displays, operating terminals, and input/output terminals, can be customized according to their usage environment.
Specifications for the interfaces are as follows.

① Microphone input terminal

Pin number	Signal name	Explanation	Terminal color
1	GND	Microphone input GND	Green
2	COLD	Microphone input balance Supplies a phantom power supply of +48 V (possible to toggle on/off)	
3	HOT		
4	RING LED	For controlling ATUC-M and ES925/XLR LED	

② Speaker output terminal

Pin number	Signal name	Explanation	Terminal color
5	HOT	Speaker output 1.4 W, 8 Ω (impedance over 4 Ω)	Green
6	COLD		

• We recommend using a shielded wire for the speaker output terminal. The GND shield in this case is connected to the GND pin (9).

③ Headphone output terminal

Pin number	Signal name	Explanation	Terminal color
7	L ch	Headphone output 15 mW 32 Ω	Green
8	R ch		
9	GND	Headphone output GND	

④ **Status output terminal**

Pin number	Signal name	Explanation	Terminal color
10	TALK LED : OPEN/CLOSE	Talk ON: Close Talk OFF: Open Requesting to talk (waiting): blinks Talk request is rejected: blinks quickly	Black
11	TALK LED : LOW/HI	Talk ON: +5 V Talk OFF: 0 V On/off operations are synchronized with the open/close operations for the TALK LED pin (10) For details on connecting microphones, see "When using with various microphones" (‣ page 19).	
12	FLOOR LED	Selecting the floor channel on the monitor channel When selected: Close When unselected: Open	
13	LANGUAGE1 LED	Selecting group 1 on the monitor channel When selected: Close When unselected: Open	
14	LANGUAGE2 LED	Selecting group 2 on the monitor channel When selected: Close When unselected: Open	
15	LANGUAGE3 LED	Selecting group 3 on the monitor channel When selected: Close When unselected: Open	

⑤ **Operation input terminal**

Pin number	Signal name	Explanation	Terminal color
16	CHANNEL	Selecting the monitor's channel	Black
17	VOL. UP	Adjusting the headphones' volume	
18	VOL. DOWN		
19	TALK ON	Request to talk Yes: Close No: Open	
20	CUT/MUTE	Request to mute/cut microphone Yes: Close No: Open	
21	TALK ON (INVERT)	Request to talk for AT8657/LED Yes: +5 V No: 0 V Request to talk for ES925/FM5, ES945O/FM5, ES947C/FM5 Yes: Open No: Close The function of this pin is the same as that of the TALK ON pin (19) *When there is a TALK ON or TALK ON (INVERT) request to talk, the system handles them both as requests to talk. For details on connecting microphones, see "When using with various microphones" (‣ page 19).	

⑥ **Power supply output terminal**

Pin number	Signal name	Explanation	Terminal color
22	5 V	Power supply for LED is 5 V	Black
23	GND	Power supply GND	

⑦ General purpose input terminals (GPI)

Pin number	Signal name	Explanation	Terminal color
24	GPI0	General purpose input terminal 0	Black
25	GPI1	General purpose input terminal 1	
26	GPI2	General purpose input terminal 2	
27	GPI3	General purpose input terminal 3	
28	GPI4	General purpose input terminal 4	
29	GPI5	General purpose input terminal 5	
30	GPI6	General purpose input terminal 6	
31	GPI7	General purpose input terminal 7	

⑧ General purpose output terminals (GPO)

Pin number	Signal name	Explanation	Terminal color
32	GPO0	General purpose output terminal 0	Black
33	GPO1	General purpose output terminal 1	
34	GPO2	General purpose output terminal 2	
35	GPO3	General purpose output terminal 3	
36	GPO4	General purpose output terminal 4	
37	GPO5	General purpose output terminal 5	
38	GPO6	General purpose output terminal 6	
39	GPO7	General purpose output terminal 7	

• You can assign functions to the general purpose input/output terminals (GPI and GPO) on the web remote's settings screen.

⑨ Audio-Technica LINK terminal

Connect the Audio-Technica products and configure the system.

NOTICE
• Power is supplied to external devices from the 5 V pin (22); however this pin has a maximum rating of +5 VDC at 100 mA. When you use this, select a circuit or current limit (resistance value) so that the rating is not exceeded.
• If this is used beyond its ratings, it may cause the product to malfunction, but even more so, it may cause fires or unforeseen accidents.

Example of a user interface connection

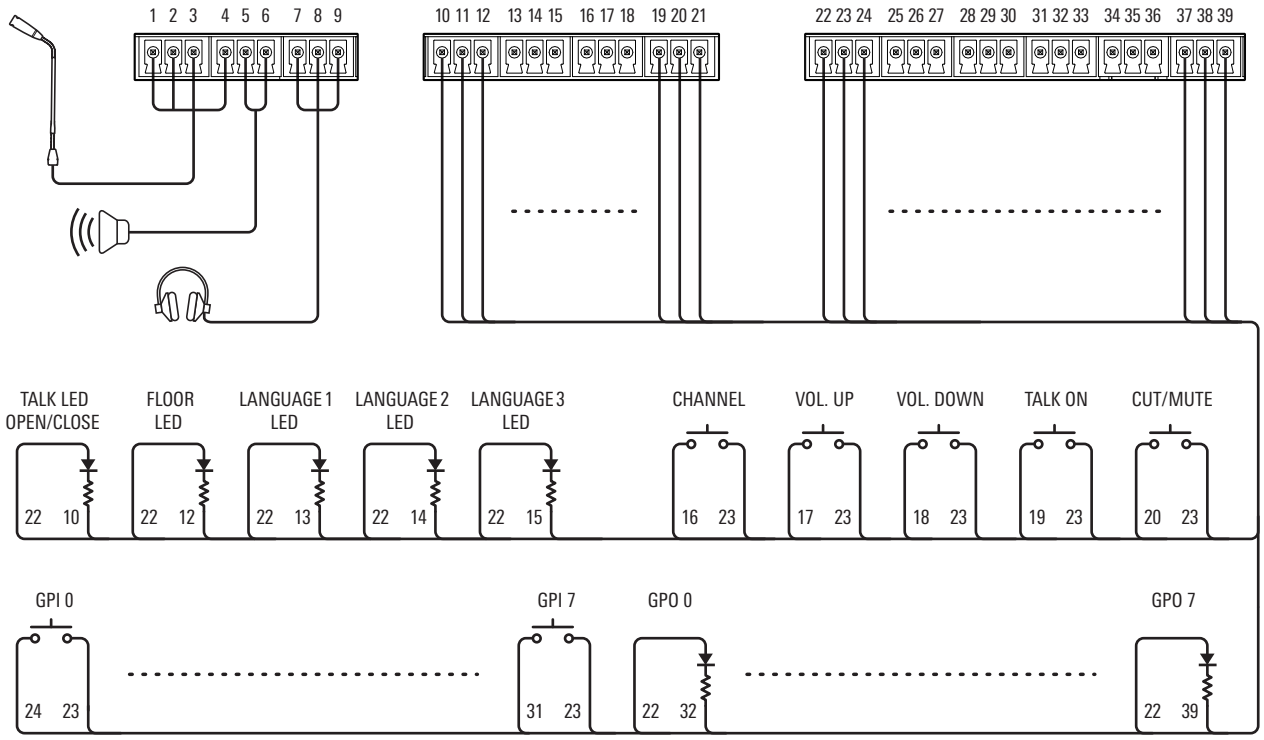

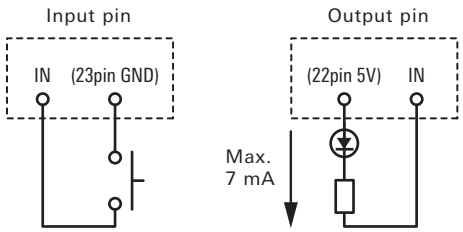

When using with various microphones

• ATUC-M, ES925/XLR

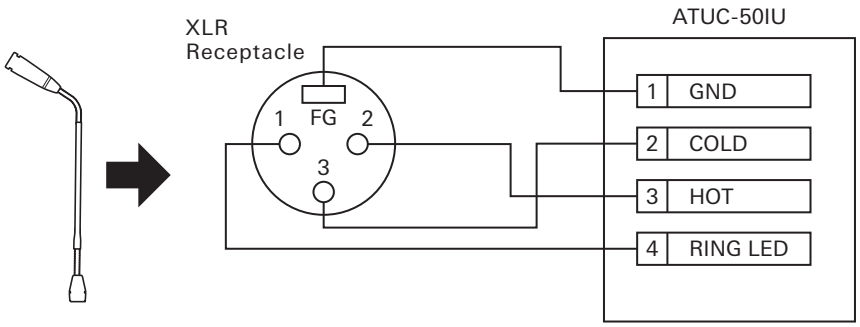

• AT8657/LED, ES925/FM5, ES945O/FM5, ES947C/FM5

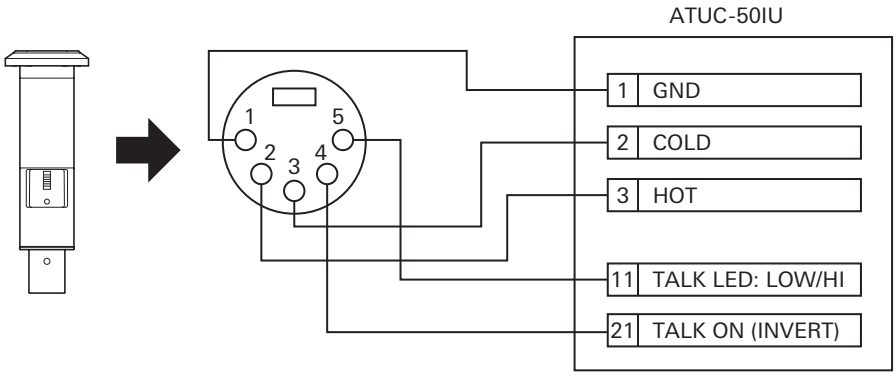

• U891RCb, ES925/DS5

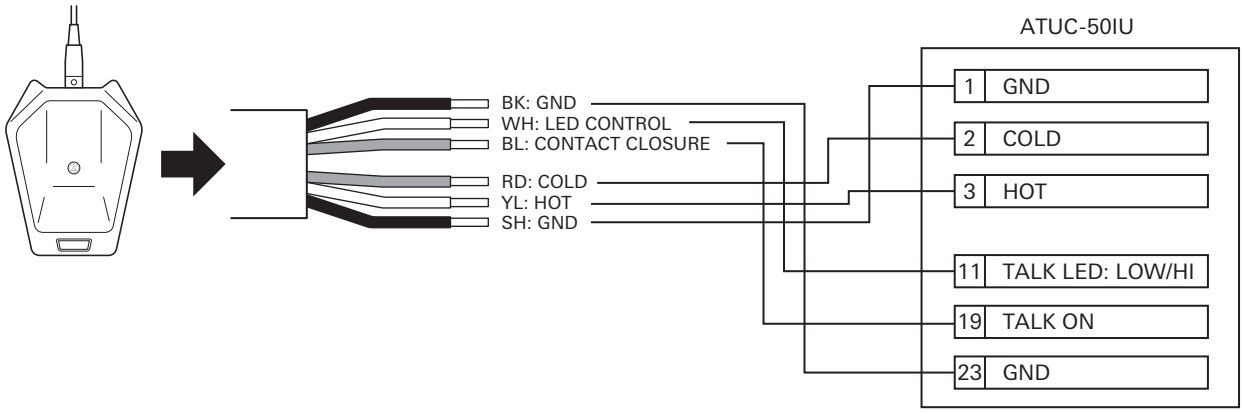

Do the following settings for U891RCb and ES925/DS5.
SW.FUNCTION: MOM. ON
CONTROL: LED Remote

Mounting an IU

• When securing in two directions
Align the IU with the edge of a table, etc., and then fasten it with screws.

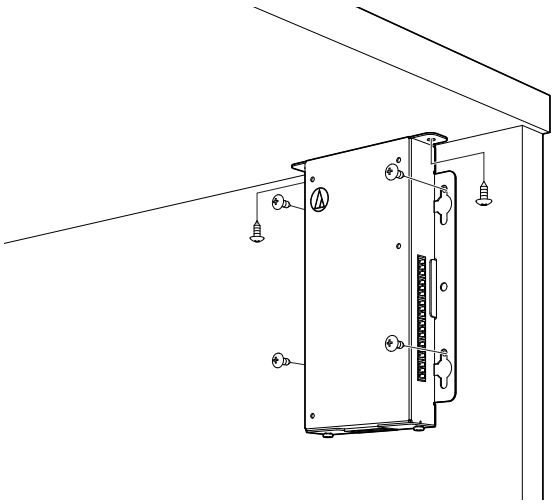

• When securing on only one side

Leave about 2 mm of the screws out when you fasten them to the table, and then hang the IU on them. Slide the IU downward, and then tighten the screws to secure the IU.

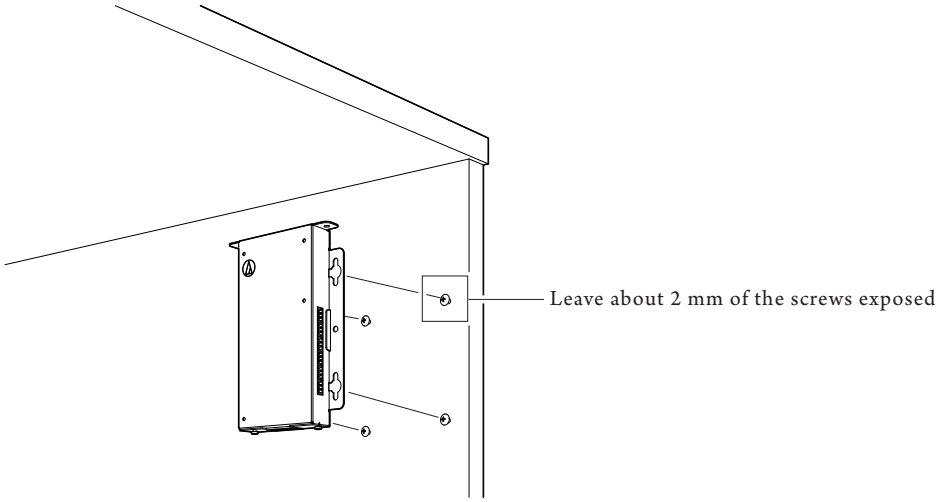

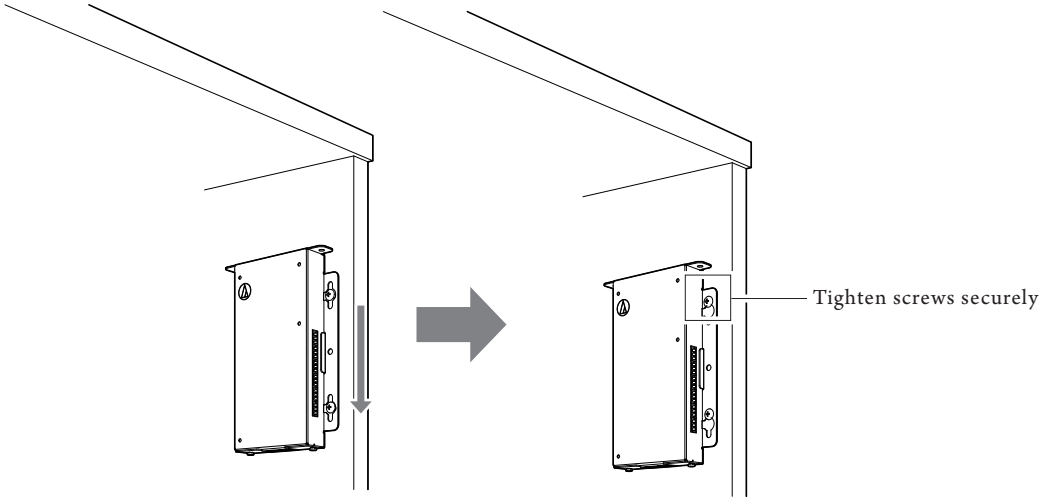

• You can also mount the IU inverted or sideways. When mounting, fasten at a minimum of two places with screws.

• Use screws with a diameter of 5 mm or less and a screw head diameter of 6 mm or more.

ATLK-EXT165

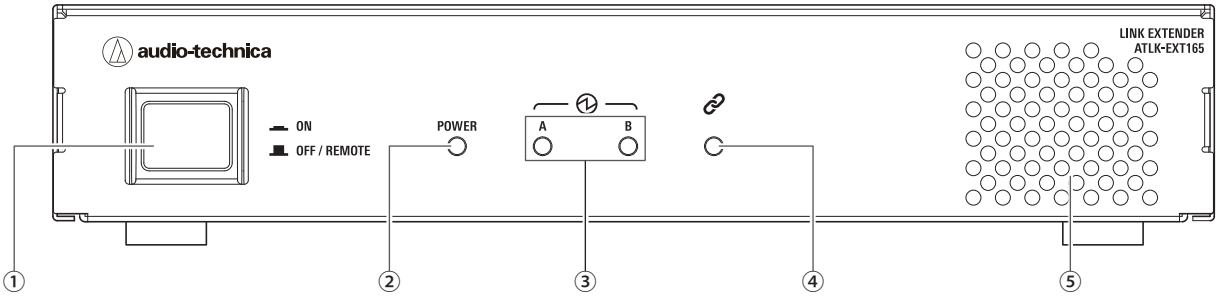

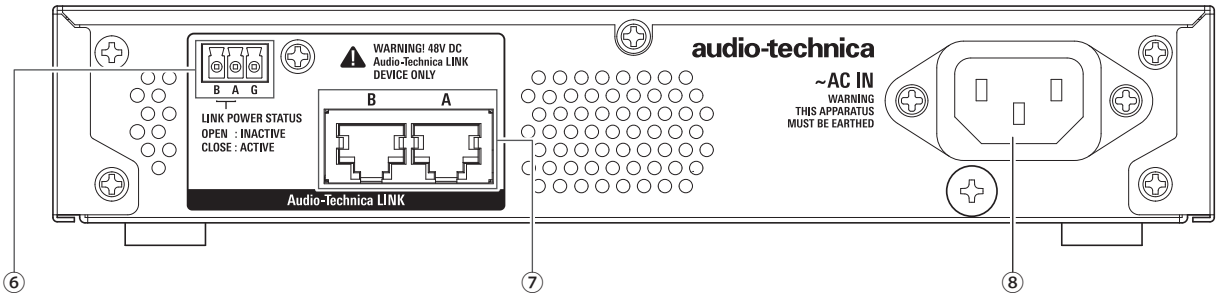

① Mode switch

Remote mode	This mode allows the CU to automatically start the unit.
Standalone mode	This mode allows you to operate the EXT by itself.

When using EXT, we recommend using standalone mode when simultaneously powering the EXT and 50CU from a power distribution unit or power tap with a centralized switch.

We recommend using remote mode when the EXT and 50CU have separate power supplies individually turning the power ON/OFF.

Use the following procedure to turn the EXT's mode switch on and off manually in standalone mode. If you change the order of operations, the 50DU that is connected may not be recognized correctly.

- To turn on the power
  Turn on 50CU power → Turn on mode switch of EXT
- To turn off the power
  Turn off mode switch of EXT → Turn off CU power

② Power indicator

③ Audio-Technica LINK Device indicator

Indicates the connection status of devices that support Audio-Technica LINK.

- Connected: Lit
- Unconnected: Unlit

④ Data indicator

- Establishing link (data not transmitted): Lit
- Transmitting data: Blinking
- No link: Unlit

⑤ Cooling fan

⑥ Audio-Technica LINK POWER STATUS output terminal

Open: Power inactive

Close: Power active

⑦ Audio-Technica LINK A/B terminals

- RJ-45
- Use to connect the devices that support Audio-Technica LINK.

⑧ AC inlet (AC IN)

Connect the supplied AC power cord.

How to mount an ATLK-EXT165

1 Use the 4 screws provided to attach the table mounts to the sides of the EXT165.

• To install on its bottom side

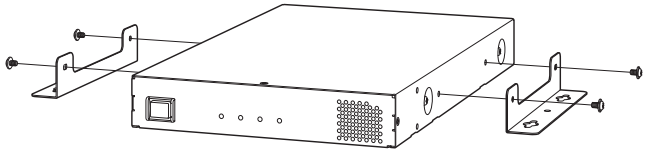

• To install on its top side

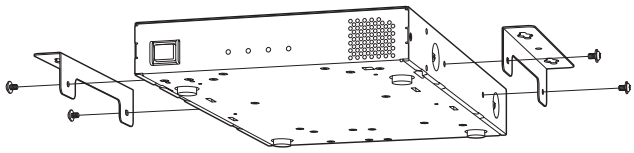

2 Matching the positions of the screw holes in the table mounts, screw commercially available screws (with a diameter of 5 mm or less and a screw head diameter of 6 mm or more) into the table, or other surface, leaving about 2 mm of the screws exposed, and then position the EXT165 over them. Slide the EXT165 into place, and then tighten the screws firmly to fix it in place.

• To install on its bottom side

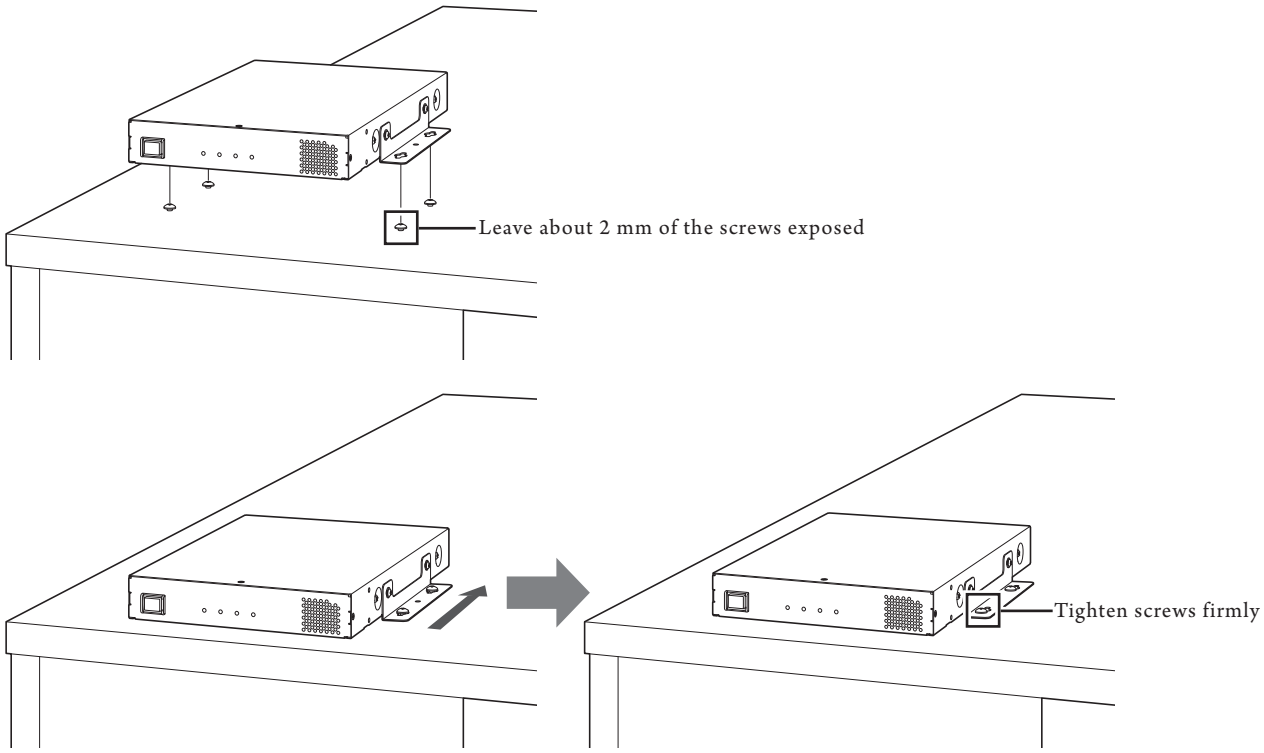

• To install on its top side

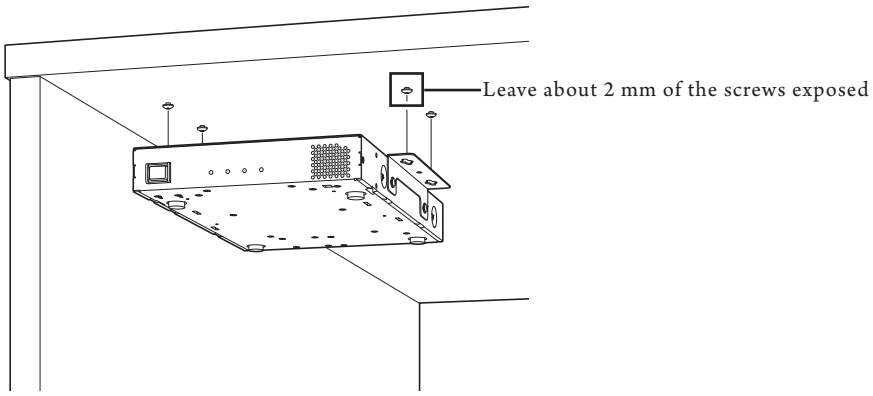

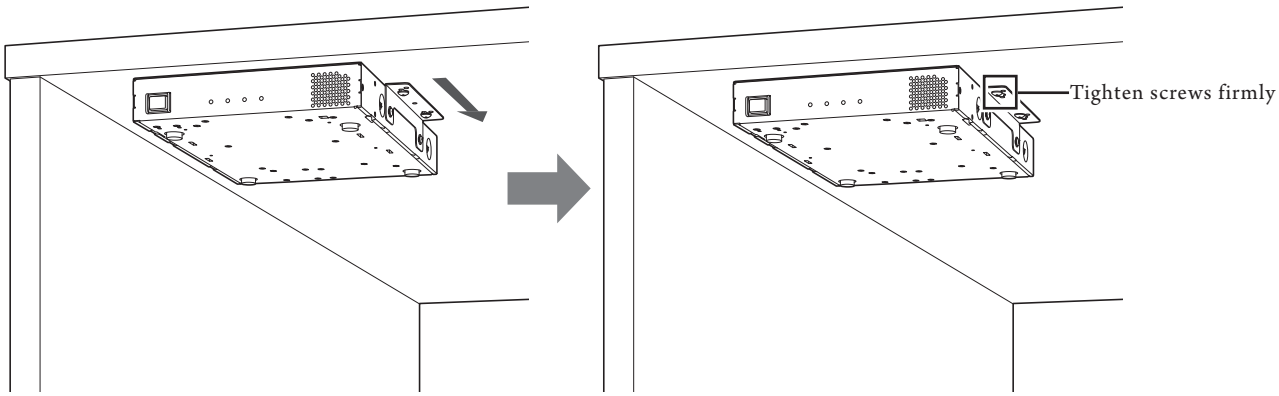

ATLK-EXT25

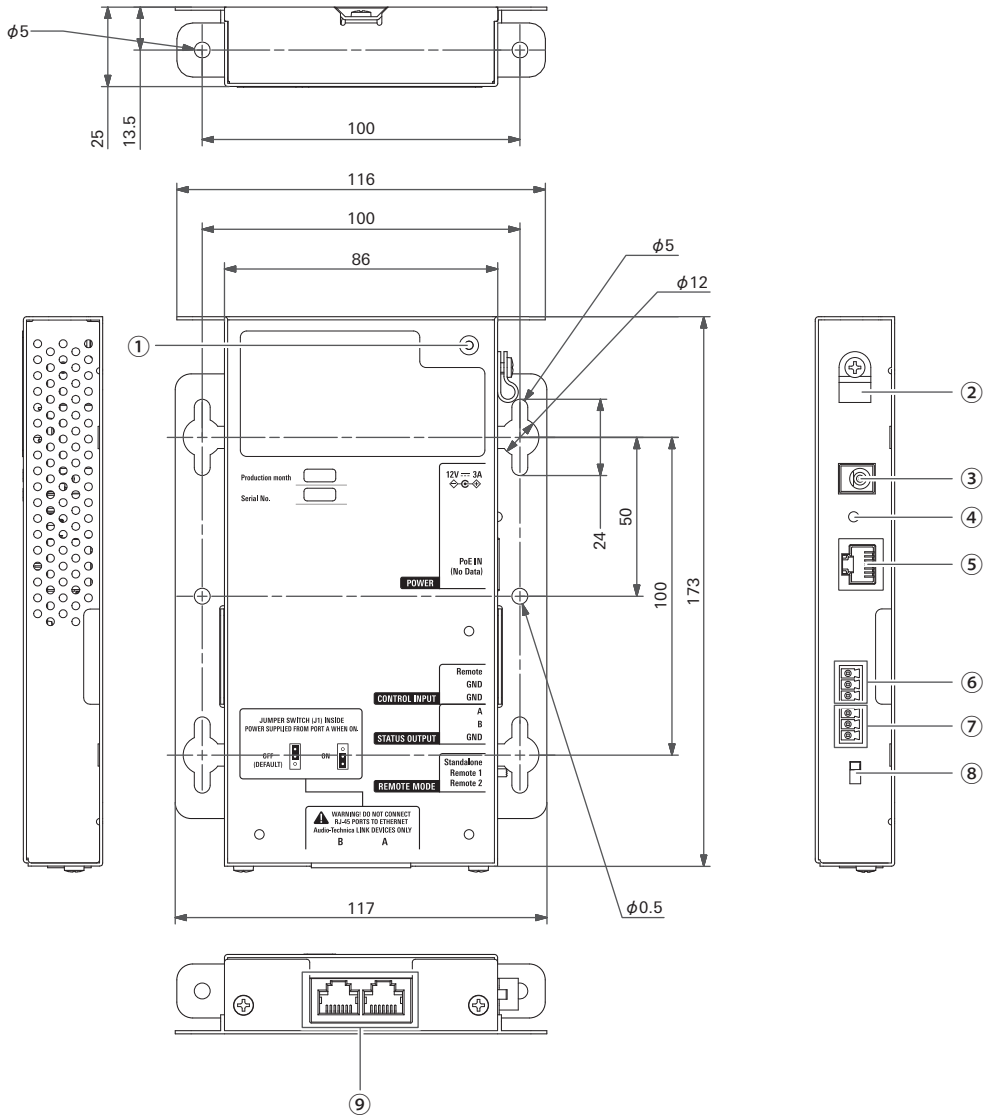

① Mounting screw hole for AC adapter cord hook

② AC adapter cord hook

③ Power input jack

You can connect the AC adapter sold separately by Audio-Technica to supply power.

④ Power indicator

⑤ PoE/PoE+ IN terminal

⑥ Control input terminal

⑦ Audio-Technica LINK POWER STATUS output terminal

Open: Power inactive

Closed: Power active

⑧ Mode switch

⑨ Audio-Technica LINK A/B terminals

- RJ-45
- Use to connect the devices that support Audio-Technica LINK.

Turning the Audio-Technica LINK A terminal ON/OFF

NOTICE
- Only qualified, experienced, authorized service personnel should remove the cover to make internal adjustments. Operating personnel should not remove the cover for any reason.
- High voltages are present when the AC adapter's cord is plugged into an electrical outlet. Service personnel should not make any internal adjustments with the AC adapter connected. Disconnect the AC adapter from its source before removing cover, because of the danger of touching an internal high-voltage part. Also, to avoid injury, take care not to touch any sharp edges within the unit, its top panel or interior sections.
- When making internal adjustments, do not touch other electronic parts to avoid malfunction.

1 Remove the three screws as shown in the figure and open the cover.

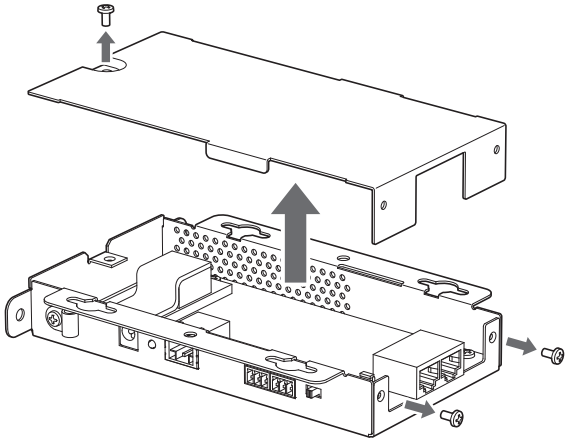

2 Move the jumper switch pin to turn the Audio-Technica LINK A terminal on/off. The default setting is OFF.

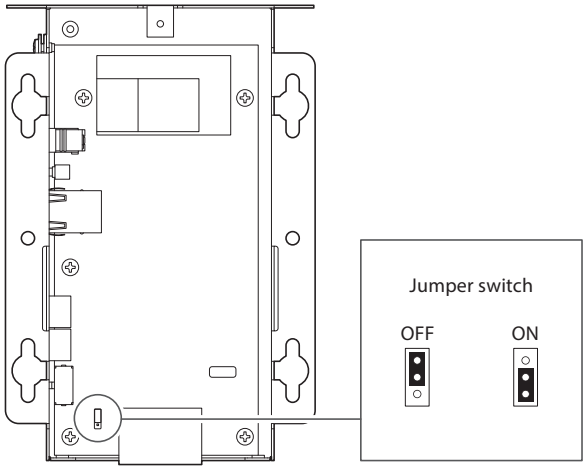

3 Replace the cover and install the three screws removed in step 1.

Set the power supply with the mode switch

To supply power from Audio-Technica LINK, set the operation mode with the mode switch.

Standalone: Always supply power from the Audio-Technica LINK terminal.
Remote 1: Supply power from the Audio-Technica LINK terminal when CU is connected.
Remote 2: Control power supplied from the Audio-Technica LINK terminal by opening/closing Remote and GND at the operation input terminal (diagram below).

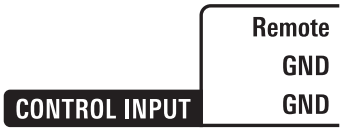

Open: Power supply OFF
Closed (Remote shorts to GND): Power supply ON

Mounting an ATLK-EXT25

• When securing in two directions

Align the EXT25 with the edge of a table, etc., and then fasten it with screws.

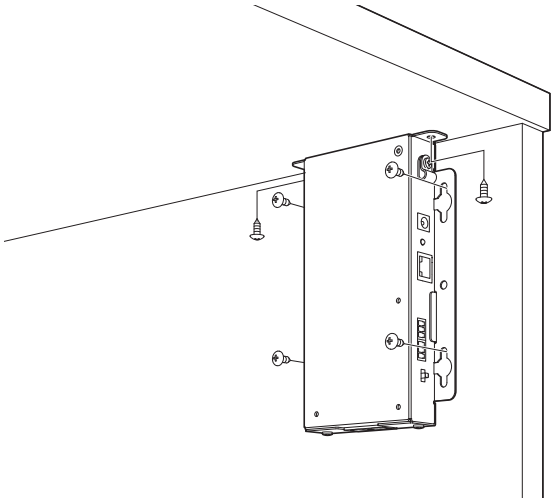

• When securing on only one side

Leave about 2 mm of the screws out when you fasten them to the table, and then hang the EXT25 on them. Slide the EXT25 downward, and then tighten the screws to secure the EXT25.

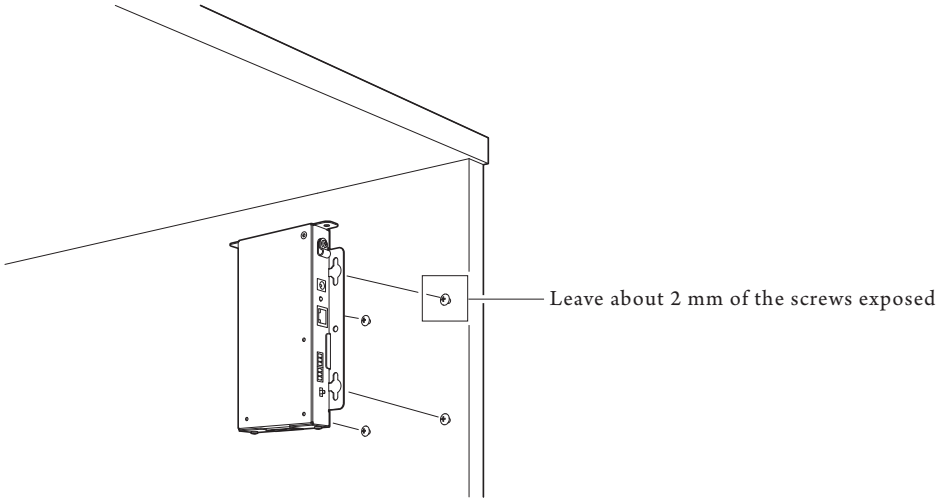

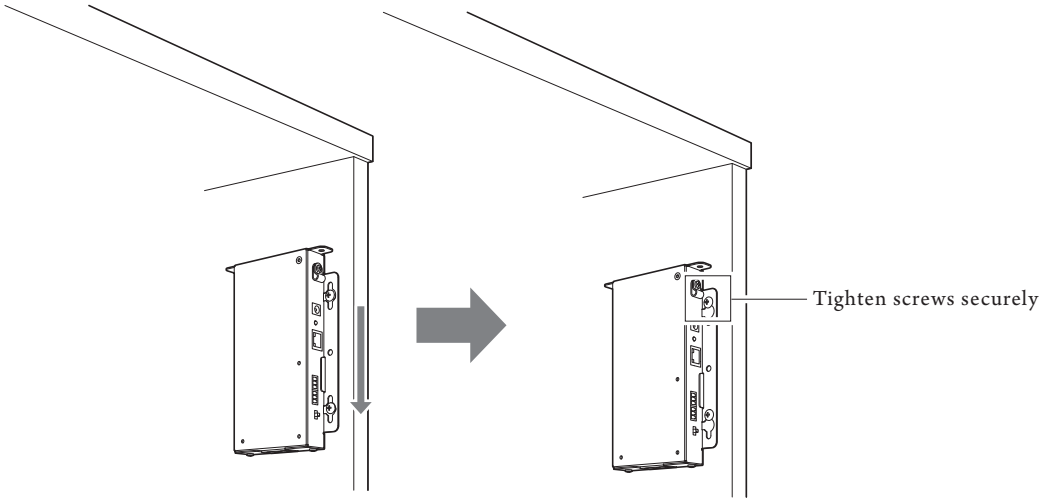

• You can also mount the EXT25 inverted or sideways. When mounting, fasten at a minimum of two places with screws.

• Use screws with a diameter of 5 mm or less and a screw head diameter of 6 mm or more.

ATUC-VU

Managing and saving the results of collected votes is done on the control PC that is connected to the ATUC-50CU.

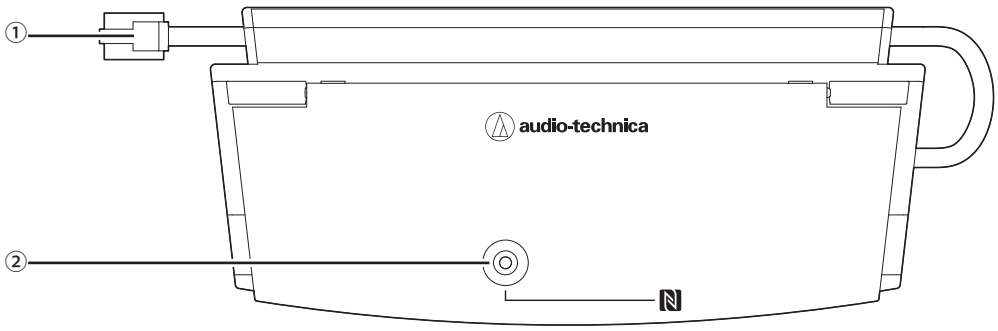

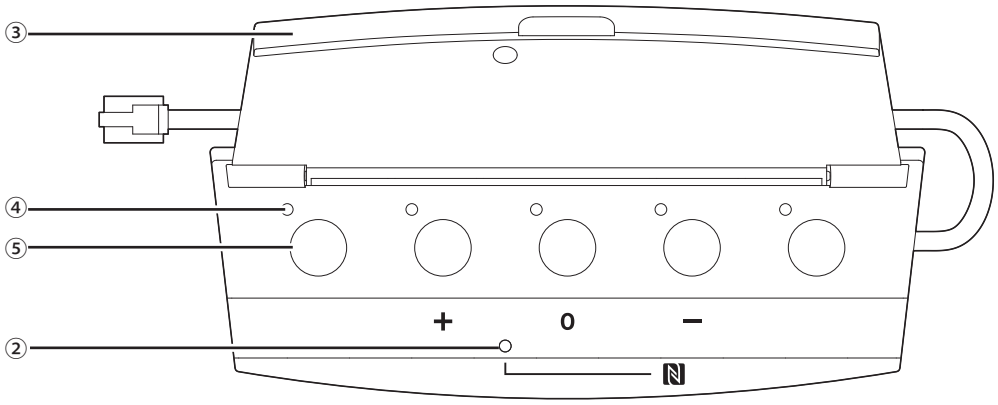

① **Connecting cable**

- RJ-11
- Cable for connecting DUa.

② **NFC Indicator (N mark area)**

- NFC card reader is built-in. The IDs of compatible NFC cards are read when passed over this area.
- Can be used even when the cover is closed.
- The indicator lights green.

- Touch the compatible NFC card to the N mark.
- When you want to touch the compatible NFC card once again (when the NFC card does not work, etc.), wait for more than 0.5 seconds.

③ **Cover**

Cover to protect the unit.

④ **Indicator**

Indicator that shows voting status.

⑤ **Button**

Buttons to cast votes.

- Using the NFC functions and controlling the buttons and indicators are done via the IP Control. See the IP Control Protocol Specifications for details.
- Specialized functions can be assigned to buttons and indicators via Web Remote when connected to DUas for which Priority is turned on. See the Web Remote Edition for details.

Changing settings from ATUC-50CU

You can change 50CU settings by selecting "Set" on the HOME screen of the display. Changeable items are as follows.
For more detailed settings and individual settings for each 50DU/IU/INT, use Web Remote.

- After changing the network setting item(s), restart the 50CU to enable the setting values.

Set Menu Items

[1] System Setting	
01 Device Name	ATUC-50CU
02 Link Port Set	CU A/B, DU C/D
03 CU Link Mode	Primary, Extension Pass Thru, Extension Last Unit
04 CU Error Notice	On, Off
05 IP Setting	
01 IP Config Mode	Auto, Static
02 IP Address	0.0.0.0 - 255.255.255.255
03 Subnet Mask	0.0.0.0 - 255.255.255.255
04 Gateway Address	0.0.0.0 - 255.255.255.255
06 Allow Discovery	On, Off
07 IP Ctrl Setting	
01 IP Ctrl Port No	00001 - 65535
02 IP Ctrl Ntfy	On, Off
03 Audio Level Ntfy	On, Off
04 M-cast Adrs	0.0.0.0 - 255.255.255.255
05 M-cast Port No	00001 - 65535
08 Auto Mode Change	
01 Auto Mode Change	On, Off
02 Hold Time(Err)	20, 30, 40 seconds
09 NTP Setting	
01 NTP	On, Off
02 NTP Adrs	0.0.0.0 - 255.255.255.255
03 NTP Port	00001 - 65535
04 Time Zone	UTC –12:00 to +14:00
05 DST	On, Off
06 DST Start Date	1/1 - 12/31
07 DST Start Time	0:00 - 23:00
08 DST End Date	1/1 - 12/31
09 DST End Time	0:00 - 23:00
10 Login Password	
01 Admin.Pwd.Login	On, Off
02 Admin.Password	Displays password
03 Opr.Pwd.Login	On, Off
04 Opr.Password	Displays password
11 Reset All Dflt.	
[2] System Info	Displays current settings
01 Name	
02 Serial Number	
03 FW Version	
04 IP Config Mode	
05 IP Address	
06 Subnet Mask	
07 Gateway Address	
08 Mac Address	
09 Allow Discovery	
10 IP Ctrl Port No	
11 IP Ctrl Ntfy	
12 Audio Level Ntfy	
13 M-cast Adrs	
14 M-cast Port No	
15 NTP	
16 NTP Adrs	
17 NTP Port	
18 Time Zone	
19 CU Link Status	
20 CU Link Mode	
21 No.ofExtensionCU	
22 Total No.of DU	
23 Total No.of IU	
24 Total No.of INT	
[3] Audio Setting	
01 MIC/LINE Input 1	
01 Input Type	Mic, Line +4dBu, Line 0dBV
02 Input Gain	–24dB to +20dB
03 Level	–∞, –120 to +10dB
04 Phantom Power	On, Off
05 Mix to Floor	On, Off
02 MIC/LINE Input 2	
01 Input Type	Mic, Line +4dBu, Line 0dBV
02 Input Gain	–24dB to +20dB
03 Level	–∞, –120 to +10dB
04 Phantom Power	On, Off
05 Mix to Floor	On, Off
03 AUX Input	
01 Level	–∞, –120 to +10dB
02 Mix to Floor	On, Off
04 DU SP Output Lvl	0 - 20
05 DU Floor Lock	On, Off
06 VoiceDetectSens	–5, –4, –3, –2, –1, 0, 1, 2, 3, 4, 5
07 Auto to Mic2 In	On, Off
[4] Recorder Setting	
01 Rec Format	WAV, MP3
02 RecordingQuality	64, 128, 192, 256, 320kbps
03 No.of Rec CH	1 to 4 (WAV), 1 to 2 (MP3)
04 Rec Source CH1	Floor, Group 0, Group 1, Group 2, Group 3, Language 1, Language 2, Language 3, Remote Lang. 1, Remote Lang. 2, Mic/Line 1, Mic/Line 2, Mic/Line 1&2 Mix
05 Rec Source CH2	Floor, Group 0, Group 1, Group 2, Group 3, Language 1, Language 2, Language 3, Remote Lang. 1, Remote Lang. 2, Mic/Line 1, Mic/Line 2, Mic/Line 1&2 Mix
06 Rec Source CH3	Floor, Group 0, Group 1, Group 2, Group 3, Language 1, Language 2, Language 3, Remote Lang. 1, Remote Lang. 2, Mic/Line 1, Mic/Line 2, Mic/Line 1&2 Mix
07 Rec Source CH4	Floor, Group 0, Group 1, Group 2, Group 3, Language 1, Language 2, Language 3, Remote Lang. 1, Remote Lang. 2, Mic/Line 1, Mic/Line 2, Mic/Line 1&2 Mix
08 Auto Track	Off, 15, 30 min, 1, 2 hour
09 Filename Prefix	Displays filename prefix
[5] Conference	
01 Conference Mode	Free Talk, Request Talk, Full Remote
02 NOM	1 to 10
03 Auto Mic Off	5 to 60sec ,Off
04 Override Mode	No Override, FIFO, LIFO (depending on Conference Mode)
05 Max Queue	0-150
06 MicON Trigger	All Button, All Push-to-Talk, All Voice
07 MicON Hold Time	1.0 to 10.0 seconds
08 Interrupt Option	Cut, Mute

[6] Logging	
01 Logging	On, Off
02 Destination	Internal, USB
[7] Presets	
01 Recall Presets	Recalls presets
02 Save Presets	Saves presets
03 Import Presets	Imports presets
04 Export Presets	Exports presets
05 Boot Up Preset	Calls presets at boot up

Entering letters

For example, when entering letters from [4] *Recorder Setting* → *09 Filename Prefix*, follow the procedure below.

1 Rotate the jog dial to select a letter.

You can use the following characters.
(1) *Password*
A to Z, a to z, 1 to 9, 0
(2) *Device Name*
A to Z, a to z, 1 to 9, 0, ! # $ ‘ ( ) * + , - . : ; < = > ? @ `, (space)
(3) *Filename Prefix*
A to Z, a to z, 1 to 9, 0, ! # $ ‘ ( ) + , - . ; = ? @ `, (space)

2 Press the ENTER button to enter the selected letter.

The cursor moves to the right.

3 Repeat steps 1 and 2 to enter desired text.

To delete characters you have just entered, follow the procedure below.

- **To move the cursor to the character you want to edit:**
  (1) While pressing and holding the BACK button, rotate the jog dial to move the cursor.
  (2) Release the BACK button.
- **To delete characters you have just entered:**
  (1) Move the cursor to the character you want to delete.
  (2) While pressing and holding the BACK button, press the ENTER button.
  The character at the current cursor position will be deleted.

- When the cursor flashes in “_” state at the end of the text, the character just before the cursor will be deleted.

- **To change characters you have just entered:**
  (1) Move the cursor to the character you want to edit.
  (2) Rotate the jog dial to select the desired character.
- **To finish editing:**
  (1) When the cursor is in “■” blinking state, press the ENTER button.
  When editing ends, the cursor will move to the end of the text and “_” will blink.

4 To enter the text, when the cursor is in the “_” blinking state, press the ENTER button.

Displays *Completed!* followed by the file name.

Overview of the Interpretation Unit (ATUC-50INT)

- Up to 6 interpretation units can be connected.
- The maximum number of 50DU/IU/INT connections is 300 (when three CUs are linked).
- INTs can only be connected to the primary 50CU. They cannot be connected to extension 50CUs.

Digital Conference System ATUC-50 with the additional Interpretation Unit ATUC-50INT enables the following three types, (1) to (3), of interpretation.
This section explains a brief overview of operations assuming that you have set the interpretation languages as in the following table.

Language Name	Audio Group 1	English
	Audio Group 2	Japanese
	Audio Group 3	French

(1) Interpretation using two languages (2 Languages)

- While in the 2 Languages interpretation mode, you can select from three interpretation patterns (see table below).
- For instance, when the interpretation pattern "English → Japanese" is set, "F" appears as the character on the left in the display ①, and "2" appears as the digit on the right. At this time, the speech from the floor channel is heard through the monitor channel. Additionally, interpreted speech that is input from the microphone of the INT is output to Audio Group 2 (the Japanese group).
- When the bi-directional interpretation pattern is selected, the interpretation system is established with just this INT1. Pressing the interpretation languages selection button ⑥ switches the interpretation patterns between "Japanese → English (Outgoing language A)" and "English → Japanese (Outgoing language B)", simultaneously switch the interpreted speech being output. Whichever interpretation pattern you selected, "Japanese → English (Outgoing language A)" or "English → Japanese (Outgoing language B)", it is not saved. When the system is started, the interpretation pattern is "Japanese → English (Outgoing language A)".

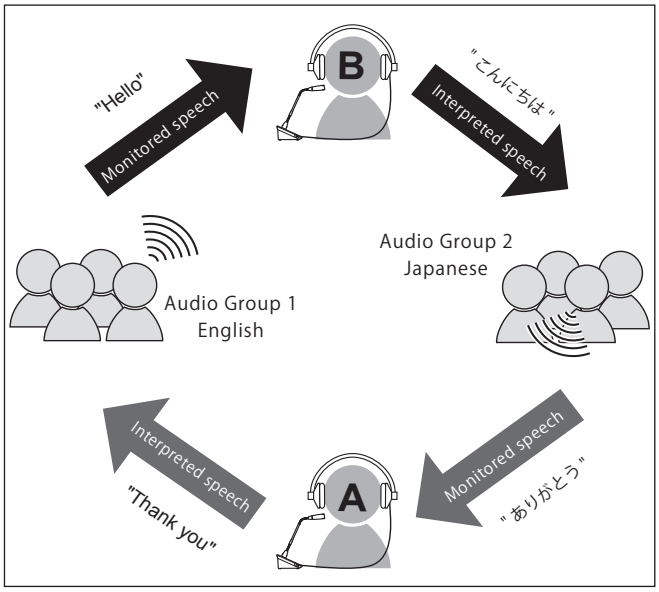

Interpretation pattern	Inter-preter	Moni-tored speech	Character on the left	Output destination group		Digit on the right
English ↔ Japanese	A + B	Floor*	F*	Outgoing language A	English	1
				Outgoing language B	Japanese	2
English → Japanese	B			Japanese		2
Japanese → English	A			English		1

* Interpreters can do a switch operation to monitor the audio of language group 1 (key language)

(2) Interpretation using three languages (3 Languages)

- While in the 3 Languages interpretation mode, you can select from nine interpretation patterns (see table below).
- Although there are three ways to do combinations within 2 Languages, the basic operations are the same as those for 2 Languages interpretation.

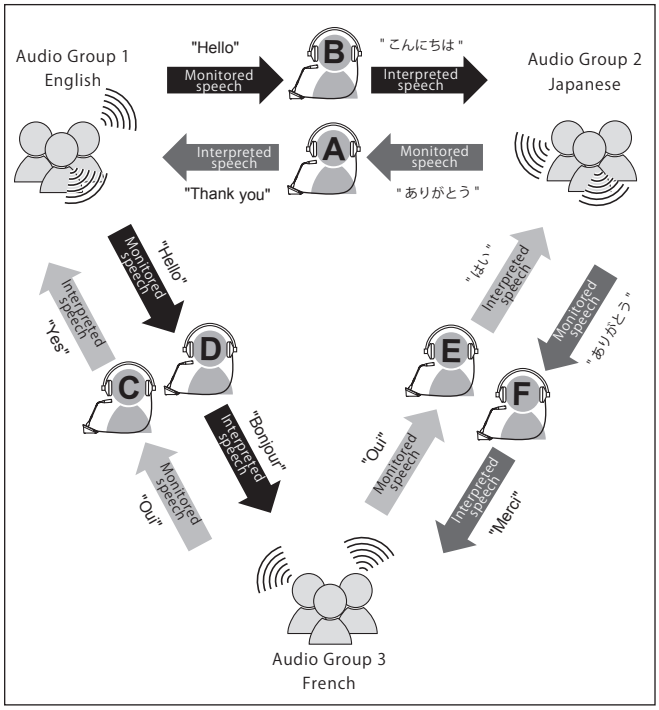

Interpretation pattern	Interpreter	Monitored speech	Character on the left	Output destination group		Digit on the right
English ↔ Japanese	A + B	Floor*	F*	Outgoing language A	English	1
				Outgoing language B	Japanese	2
English ↔ French	C + D			Outgoing language A	English	1
				Outgoing language B	French	3
Japanese ↔ French	E + F			Outgoing language A	Japanese	2
				Outgoing language B	French	3
English → Japanese	B			Japanese		2
Japanese → English	A			English		1
English → French	D			French		3
French → English	C			English		1
Japanese → French	F			French		3
French → Japanese	E			Japanese		2

* Interpreters can do a switch operation to monitor the audio of language group 1 (key language)

- Out of the three languages, the language of Audio Group 1 is used as the key language (in this case it is English), and relay interpretation is possible. (diagram below)
- When interpreting from French to Japanese, for example, Interpreter C first interprets "French → English". Interpreter B switches the monitor channel to the key language "1", listens to the English interpretation from interpreter C, and then interprets "English → Japanese".
- Other than that, the basic operations are the same as those for 2 languages.

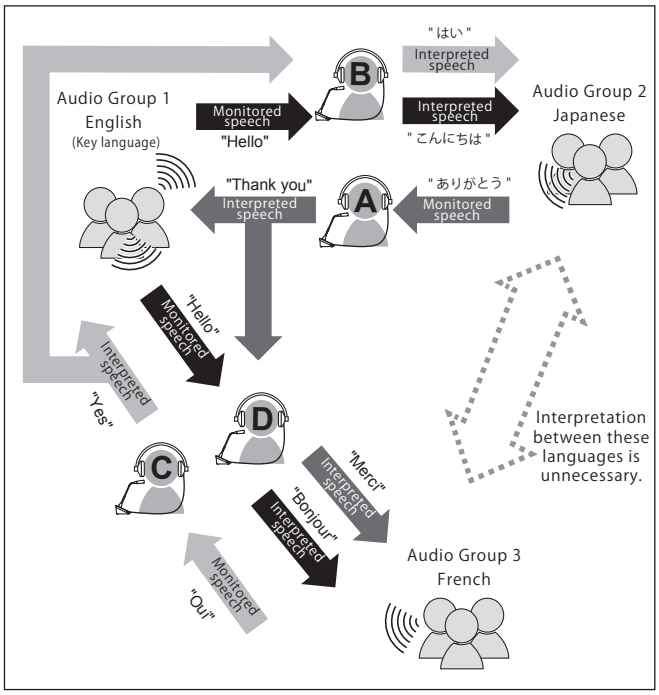

Interpretation pattern	Interpreter	Monitored speech	Character on the left	Output destination group		Digit on the right
English ↔ Japanese	A + B	Floor/ English	F/1	Outgoing language A	English	1
		(switched by interpreter)		Outgoing language B	Japanese	2
English ↔ French	C + D	Floor/ English	F/1	Outgoing language A	English	1
		(switched by interpreter)		Outgoing language B	French	3
English → Japanese	B	English	1	Japanese		2
Japanese → English	A	Floor	F	English		1
English → French	D	English	1	French		3
French → English	C	Floor	F	English		1

Wired System Connections and Configuration

Connecting devices

NOTICE
- Do not plug in the supplied AC power cord until all other connections have been completed.
- Insert the plugs all the way in. Loose connections may cause malfunctions or noise.
- Check the plug orientations.
- Refer also to the instruction manuals supplied with the external devices.
- Although connecting the 50CUs, 50DUs, and INTs are described here, because basic IU connections are the same as those for 50DUs, refer to how to connect the DUs when connecting IUs. However, refer to the table "Relationship of the LAN cable length, number of units connected and number of EXTs required" (› page 37, 44) regarding the number of IUs to connect.

Entire system connection diagram (1)

Refer also to the entire system connection diagram (2) (› page 49)

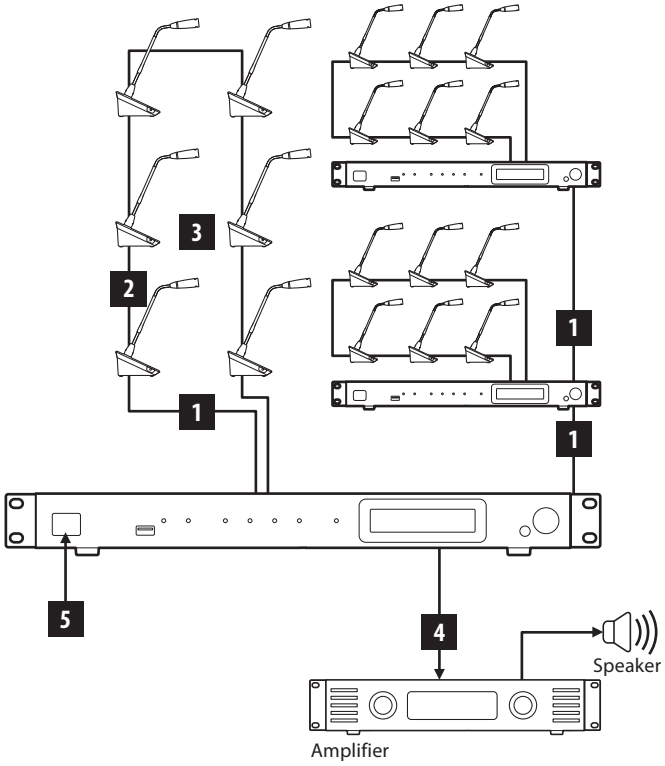

NOTICE
- Use straight cables. (Shielded cables with conductor size of 24AWG or higher in diameter)
- Using flat-type cables or unshielded cables may cause noise and affect other devices.
- Be sure to establish a ground connection.

When securing a 50DU/INT to a desk or table, use the screw holes (3 holes) on the bottom side of the 50DU/INT (screw: M3, P=0.5, within 6 mm from the bottom side to the tip of the screw).

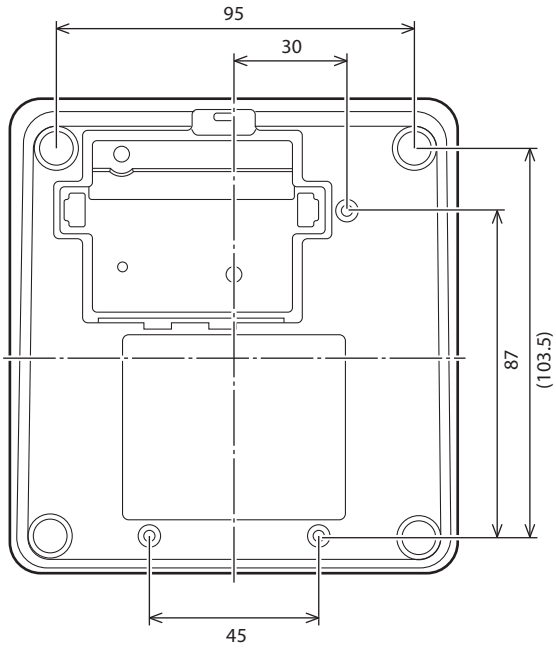

1 Connecting 50DU/INT to 50CU

1 Place the 50CUs and 50DU/INTs.

NOTICE
- Install the units on a flat surface. Dropping a unit may cause damage to the unit and/or personal injury.
- When installing the 50CU in a rack, read the precautions in advance (› page 5).

2 Connect the 50DU/INTs to the DU CHAIN A/B terminals.

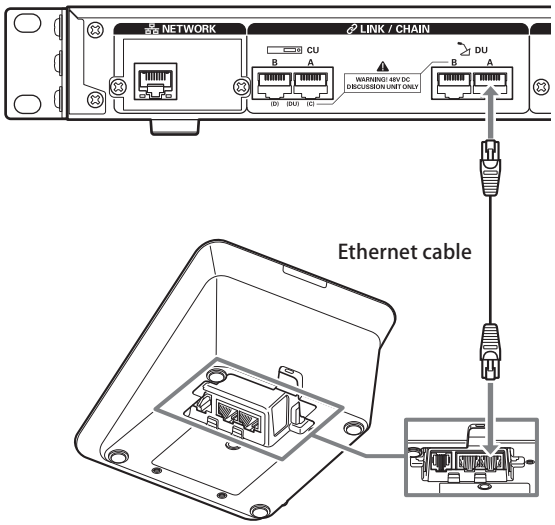

- Remove the 50DU/INT bottom cover to connect the Ethernet cables. To remove the bottom cover, pinch together the latches on both sides.
- On the 50DU/INT, the 50DU/50CU connection terminals are not differentiated, so you can connect to either the left or right terminal.

2 Connecting the 50DU/INTs together

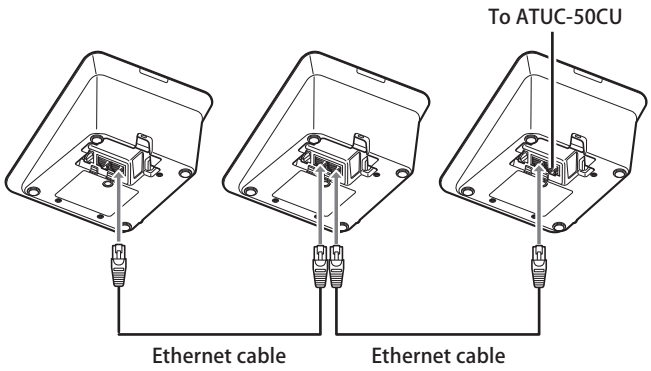

1 Connect the 50DU/INTs according to the installation environment and operation method.

Daisy-chain connection:

Connect the 50DU/INTs in a series to the DU CHAIN A/B (C/D) terminals. Compared to a ring connection, a daisy-chain connection enables the 50DU/INTs to be placed even farther from the 50CU.

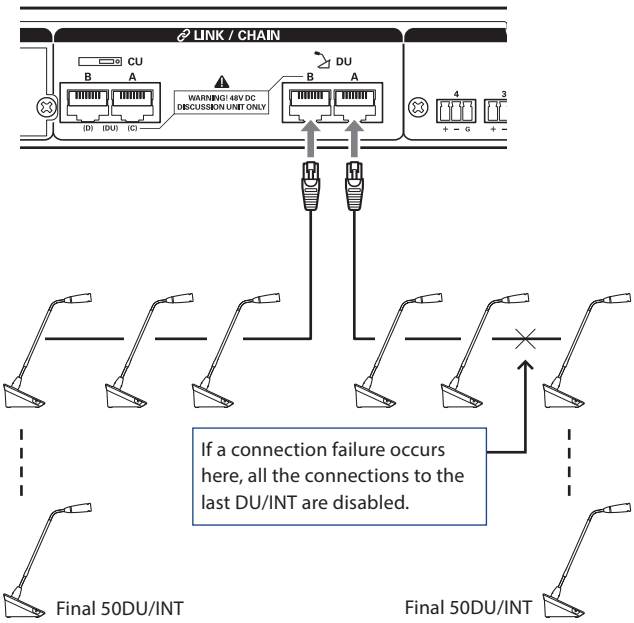

Ring connection:

Connect the 50DU/INTs to each of the DU CHAIN A/B terminals and then connect together the last 50DU/INTs together to form a ring. Even if a connection failure occurs somewhere in the ring, since the connection is recognized as 2 daisy chains using the DU CHAIN A/B terminals, the influence of the failure can be minimized and you can continue operating.

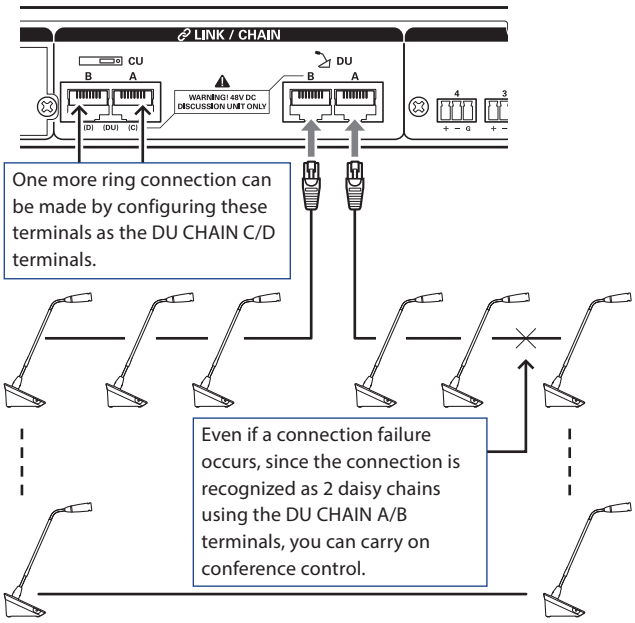

- Combining different connection types is also possible, such as a ring connection using the DU CHAIN A/B terminals and daisy-chain connections using the DU CHAIN C/D terminals.

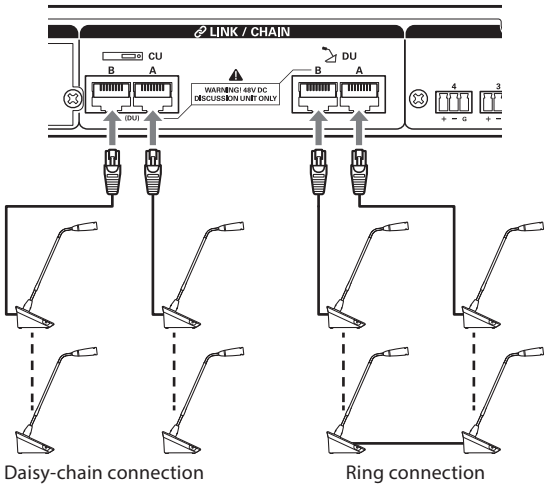

2 Expand the system with EXT.

By adding EXT to the system, you can increase the number of 50DU/INT connections and extend the distance of the total extension length of the connecting cable (LAN cable).

For instance, you can connect a total of 100 50DUs/INTs, 50 units on either terminal, by connecting an ATLK-EXT165 near the B terminal when using a daisy-chain connection on both the DU CHAIN A and B terminals.

Maximum number of connections for each terminal/each 50CU in Standalone mode

	Maximum number of terminal connections in a DU CHAIN				
	A	B	C	D	Total
Daisy Chain	50	50	50	50	100*
Ring	50		50		100

* The maximum number of units that can be connected is up to 100 units to each terminal on the DU CHAIN by using the EXT.
* IUs consume more power than 50DUs, so the number of units shown in the table cannot be connected. If you connect that many, it may damage the 50CUs or the EXTs.
Refer to the table "Relationship of the LAN cable length, number of units connected and number of EXTs required" (‣ page 37, 44) regarding the number of IUs that can be connected.

Maximum number of connections for each terminal/each CU when using 3 CU LINKs

	ATUC-50CU Primary			ATUC-50CU Extension *max 2pcs				System Total
	Maximum number of terminal connections in a DU CHAIN			Maximum number of terminal connections in a DU CHAIN				
	A	B	Total	A	B	Total	50CU x 2 Total	
Daisy Chain	50	50	100	50	50	100	200	300
Ring	50		50	50		50	100	150

NOTICE • Up to 6 INTs can be connected to the primary 50CU.

Daisy-chain connection (ATLK-EXT165)

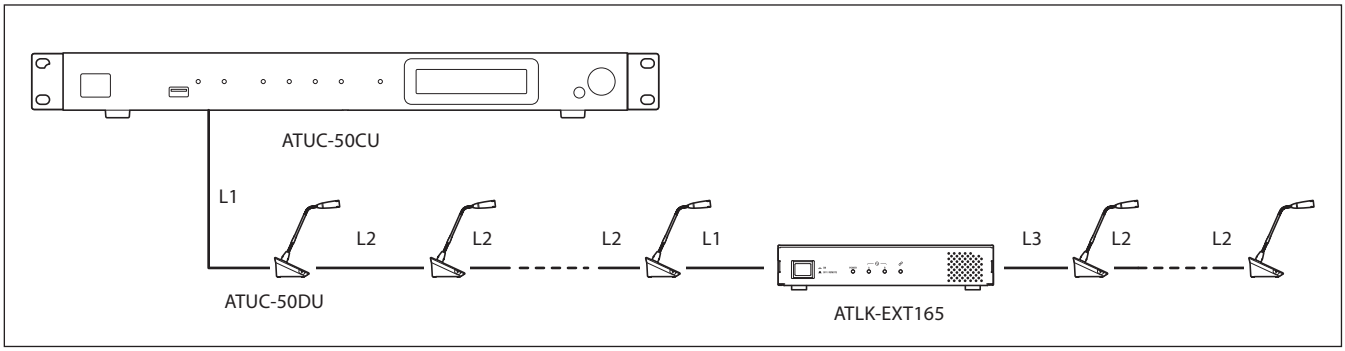

NOTICE
- For a 50CU-50DU-50DU-...50DU-EXT165 connection, the distance between the [50DU-EXT165] is L1.
- When it is EXT165-50DU-...-50DU-50DU-, the distance for [EXT165-50DU] is L3.

Relationship of the LAN cable length, number of units connected and number of EXT165s required: Daisy-chain connection

Length of cables			1-port daisy-chain connection (using DUs)		1-port daisy-chain connection (using IUs)		1-port daisy-chain connection (using 50DUa + VUs)	
50CU-50DU	50DU-50DU	EXT165-50DU	Number of 50DUs connected	Number of EXT165s needed	Number of IUs connected	Number of EXT165s needed	Number of 50DUa + VUs connected	Number of EXT165s needed
L1	L2	L3						
10 m	1.5 m	10 m	1 to 45 units	0 units	1 to 30 units	0 units	1 to 32 units	0 units
			46 to 50 units	1 unit	31 to 45 units	1 unit	33 to 49 units	1 unit
50 m	1.5 m	10 m	1 to 36 units	0 units	1 to 24 units	0 units	1 to 26 units	0 units
			37 to 50 units	1 unit	25 to 39 units	1 unit	27 to 42 units	1 unit
100 m	1.5 m	10 m	1 to 24 units	0 units	1 to 16 units	0 units	1 to 17 units	0 units
			25 to 50 units	1 unit	17 to 33 units	1 unit	18 to 36 units	1 unit
10 m	2.0 m	10 m	1 to 29 units	0 units	1 to 27 units	0 units	1 to 31 units	0 units
			44 to 50 units	1 unit	28 to 43 units	1 unit	32 to 48 units	1 unit
50 m	2.0 m	10 m	1 to 34 units	0 units	1 to 23 units	0 units	1 to 25 units	0 units
			35 to 50 units	1 unit	24 to 37 units	1 unit	26 to 41 units	1 unit
100 m	2.0 m	10 m	1 to 24 units	0 units	1 to 16 units	0 units	1 to 17 units	0 units
			25 to 50 units	1 unit	17 to 33 units	1 unit	18 to 36 units	1 unit
10 m	5.0 m	10 m	1 to 33 units	0 units	1 to 25 units	0 units	1 to 26 units	0 units
			34 to 50 units	1 unit	26 to 39 units	1 unit	27 to 42 units	1 unit
50 m	5.0 m	10 m	1 to 27 units	0 units	1 to 20 units	0 units	1 to 21 units	0 units
			28 to 50 units	1 unit	21 to 34 units	1 unit	22 to 38 units	1 unit
100 m	5.0 m	10 m	1 to 20 units	0 units	1 to 14 units	0 units	1 to 15 units	0 units
			21 to 48 units	1 unit	15 to 30 units	1 unit	16 to 34 units	1 unit

Length of cables			2-port daisy-chain connection (using 50DUs)			2-port daisy-chain connection (using IUs)			2-port daisy-chain connection (using 50DUa + VUs)		
50CU-50DU L1	50DU-50DU L2	EXT165-50DU L3	Number of 50DUs connected	Maximum number of units connected	Number of EXT165s needed	Number of IUs connected	Maximum number of units connected	Number of EXT165s needed	Number of 50DUa + VUs connected	Maximum number of units connected	Number of EXT165s needed
10 m	1.5 m	10 m	1 to 25 × 2 units	(total 50 units)	0 units	1 to 16 × 2 units	(total 32 units)	0 units	1 to 18 × 2 units	(total 36 units)	0 units
			26 to 50 × 2 units	(total 100 units)	2 units	17 to 39 × 2 units	(total 78 units)	2 units	19 to 42 × 2 units	(total 84 units)	2 units
50 m	1.5 m	10 m	1 to 23 × 2 units	(total 46 units)	0 units	1 to 15 × 2 units	(total 30 units)	0 units	1 to 16 × 2 units	(total 32 units)	0 units
			24 to 50 × 2 units	(total 100 units)	2 units	16 to 37 × 2 units	(total 74 units)	2 units	17 to 40 × 2 units	(total 80 units)	2 units
100 m	1.5 m	10 m	1 to 20 × 2 units	(total 40 units)	0 units	1 to 13 × 2 units	(total 26 units)	0 units	1 to 14 × 2 units	(total 28 units)	0 units
			21 to 50 × 2 units	(total 100 units)	2 units	14 to 35 × 2 units	(total 70 units)	2 units	15 to 38 × 2 units	(total 76 units)	2 units
10 m	2.0 m	10 m	1 to 25 × 2 units	(total 50 units)	0 units	1 to 16 × 2 units	(total 32 units)	0 units	1 to 18 × 2 units	(total 36 units)	0 units
			26 to 50 × 2 units	(total 100 units)	2 units	17 to 37 × 2 units	(total 74 units)	2 units	19 to 42 × 2 units	(total 84 units)	2 units
50 m	2.0 m	10 m	1 to 23 × 2 units	(total 46 units)	0 units	1 to 15 × 2 units	(total 30 units)	0 units	1 to 16 × 2 units	(total 32 units)	0 units
			24 to 50 × 2 units	(total 100 units)	2 units	16 to 36 × 2 units	(total 72 units)	2 units	17 to 40 × 2 units	(total 80 units)	2 units
100 m	2.0 m	10 m	1 to 20 × 2 units	(total 40 units)	0 units	1 to 12 × 2 units	(total 24 units)	0 units	1 to 14 × 2 units	(total 28 units)	0 units
			21 to 50 × 2 units	(total 100 units)	2 units	13 to 34 × 2 units	(total 68 units)	2 units	15 to 38 × 2 units	(total 76 units)	2 units
10 m	5.0 m	10 m	1 to 24 × 2 units	(total 48 units)	0 units	1 to 16 × 2 units	(total 32 units)	0 units	1 to 17 × 2 units	(total 34 units)	0 units
			25 to 50 × 2 units	(total 100 units)	2 units	17 to 35 × 2 units	(total 70 units)	2 units	18 to 38 × 2 units	(total 76 units)	2 units
50 m	5.0 m	10 m	1 to 22 × 2 units	(total 44 units)	0 units	1 to 14 × 2 units	(total 28 units)	0 units	1 to 15 × 2 units	(total 30 units)	0 units
			23 to 50 × 2 units	(total 100 units)	2 units	15 to 33 × 2 units	(total 66 units)	2 units	16 to 37 × 2 units	(total 74 units)	2 units
100 m	5.0 m	10 m	1 to 19 × 2 units	(total 38 units)	0 units	1 to 12 × 2 units	(total 24 units)	0 units	1 to 13 × 2 units	(total 26 units)	0 units
			20 to 48 × 2 units	(total 96 units)	2 units	13 to 31 × 2 units	(total 62 units)	2 units	14 to 34 × 2 units	(total 68 units)	2 units

Length of cables			Connection ports	4-port daisy-chain connection (using 50DUs)			4-port daisy-chain connection (using IUs)			4-port daisy-chain connection (using 50DUa + VUs)		
50CU-50DU	50DU-50DU	EXT165-50DU		Number of 50DUs connected	Maximum number of units connected	Number of EXT165s needed	Number of IUs connected	Maximum number of units connected	Number of EXT165s needed	Number of 50DUa + VUs connected	Maximum number of units connected	Number of EXT165s needed
L1	L2	L3										
10 m	1.5 m	10 m	A/B	1 to 15 × 2 units	(total 50 units)	0 units	1 to 10 × 2 units	(total 32 units)	0 units	1 to 12 × 2 units	(total 36 units)	0 units
			C/D	1 to 10 × 2 units		0 units	1 to 6 × 2 units		0 units	1 to 6 × 2 units		0 units
			A/B	16 to 30 × 2 units	(total 100 units)	2 units	11 to 30 × 2 units	(total 100 units)	2 units	13 to 30 × 2 units	(total 100 units)	2 units
			C/D	11 to 20 × 2 units		2 units	7 to 20 × 2 units		2 units	7 to 20 × 2 units		2 units
50 m	1.5 m	10 m	A/B	1 to 15 × 2 units	(total 50 units)	0 units	1 to 9 × 2 units	(total 30 units)	0 units	1 to 12 × 2 units	(total 34 units)	0 units
			C/D	1 to 10 × 2 units		0 units	1 to 6 × 2 units		0 units	1 to 5 × 2 units		0 units
			A/B	16 to 30 × 2 units	(total 100 units)	2 units	10 to 30 × 2 units	(total 100 units)	2 units	13 to 30 × 2 units	(total 100 units)	2 units
			C/D	11 to 20 × 2 units		2 units	7 to 20 × 2 units		2 units	6 to 20 × 2 units		2 units
100 m	1.5 m	10 m	A/B	1 to 14 × 2 units	(total 48 units)	0 units	1 to 8 × 2 units	(total 28 units)	0 units	1 to 10 × 2 units	(total 30 units)	0 units
			C/D	1 to 10 × 2 units		0 units	1 to 6 × 2 units		0 units	1 to 5 × 2 units		0 units
			A/B	15 to 30 × 2 units	(total 100 units)	2 units	9 to 30 × 2 units	(total 100 units)	2 units	11 to 30 × 2 units	(total 100 units)	2 units
			C/D	11 to 20 × 2 units		2 units	7 to 20 × 2 units		2 units	6 to 20 × 2 units		2 units
10 m	2.0 m	10 m	A/B	1 to 15 × 2 units	(total 50 units)	0 units	1 to 10 × 2 units	(total 32 units)	0 units	1 to 12 × 2 units	(total 36 units)	0 units
			C/D	1 to 10 × 2 units		0 units	1 to 6 × 2 units		0 units	1 to 6 × 2 units		0 units
			A/B	16 to 30 × 2 units	(total 100 units)	2 units	11 to 30 × 2 units	(total 100 units)	2 units	13 to 30 × 2 units	(total 100 units)	2 units
			C/D	11 to 20 × 2 units		2 units	7 to 20 × 2 units		2 units	7 to 20 × 2 units		2 units
50 m	2.0 m	10 m	A/B	1 to 15 × 2 units	(total 50 units)	0 units	1 to 9 × 2 units	(total 30 units)	0 units	1 to 12 × 2 units	(total 34 units)	0 units
			C/D	1 to 10 × 2 units		0 units	1 to 6 × 2 units		0 units	1 to 5 × 2 units		0 units
			A/B	16 to 30 × 2 units	(total 100 units)	2 units	10 to 30 × 2 units	(total 100 units)	2 units	13 to 30 × 2 units	(total 100 units)	2 units
			C/D	11 to 20 × 2 units		2 units	7 to 20 × 2 units		2 units	6 to 20 × 2 units		2 units
100 m	2.0 m	10 m	A/B	1 to 14 × 2 units	(total 48 units)	0 units	1 to 8 × 2 units	(total 28 units)	0 units	1 to 10 × 2 units	(total 30 units)	0 units
			C/D	1 to 10 × 2 units		0 units	1 to 6 × 2 units		0 units	1 to 5 × 2 units		0 units
			A/B	15 to 30 × 2 units	(total 100 units)	2 units	9 to 30 × 2 units	(total 100 units)	2 units	11 to 30 × 2 units	(total 100 units)	2 units
			C/D	11 to 20 × 2 units		2 units	7 to 20 × 2 units		2 units	6 to 20 × 2 units		2 units

Length of cables			Connection ports	4-port daisy-chain connection (using 50DUs)			4-port daisy-chain connection (using IUs)			4-port daisy-chain connection (using 50DUa + VUs)		
50CU-50DU	50DU-50DU	EXT165-50DU		Number of 50DUs connected	Maximum number of units connected	Number of EXT165s needed	Number of IUs connected	Maximum number of units connected	Number of EXT165s needed	Number of 50DUa + VUs connected	Maximum number of units connected	Number of EXT165s needed
L1	L2	L3										
10 m	5.0 m	10 m	A/B	1 to 15 × 2 units	(total 50 units)	0 units	1 to 10 × 2 units	(total 32 units)	0 units	1 to 12 × 2 units	(total 36 units)	0 units
			C/D	1 to 10 × 2 units		0 units	1 to 6 × 2 units		0 units	1 to 6 × 2 units		0 units
			A/B	16 to 30 × 2 units	(total 100 units)	2 units	11 to 29 × 2 units	(total 98 units)	2 units	13 to 30 × 2 units	(total 100 units)	2 units
			C/D	11 to 20 × 2 units		2 units	7 to 20 × 2 units		2 units	7 to 20 × 2 units		2 units
50 m	5.0 m	10 m	A/B	1 to 15 × 2 units	(total 50 units)	0 units	1 to 9 × 2 units	(total 30 units)	0 units	1 to 11 × 2 units	(total 32 units)	0 units
			C/D	1 to 10 × 2 units		0 units	1 to 6 × 2 units		0 units	1 to 5 × 2 units		0 units
			A/B	16 to 30 × 2 units	(total 100 units)	2 units	10 to 29 × 2 units	(total 98 units)	2 units	12 to 30 × 2 units	(total 100 units)	2 units
			C/D	11 to 20 × 2 units		2 units	7 to 20 × 2 units		2 units	6 to 20 × 2 units		2 units
100 m	5.0 m	10 m	A/B	1 to 14 × 2 units	(total 48 units)	0 units	1 to 8 × 2 units	(total 28 units)	0 units	1 to 11 × 2 units	(total 32 units)	0 units
			C/D	1 to 10 × 2 units		0 units	1 to 6 × 2 units		0 units	1 to 5 × 2 units		0 units
			A/B	15 to 30 × 2 units	(total 100 units)	2 units	9 to 28 × 2 units	(total 96 units)	2 units	12 to 30 × 2 units	(total 100 units)	2 units
			C/D	11 to 20 × 2 units		2 units	7 to 20 × 2 units		2 units	6 to 20 × 2 units		2 units

The values in the tables above are calculated based on the following assumptions.

- The number of 50DUs that can be connected is based on the assumption that the ATUC-M is used.
- The number of IUs that can be connected is based on the assumption that ATUC-M, TALK LED, FLOOR LED, 8-Ω speaker units, 32-Ω impedance headphones, and GPO terminals with LED x 4 (7 mA each) are being used.
- Given that Cat5e or higher cables (shielded cables with conductor size of 24AWG or greater in diameter) are used.
- 1-port daisy-chain connection: Given that one of the DU CHAIN A/B terminals is connected in a 50DU/IU daisy chain.
- 2-port daisy-chain connection: Given that the same number of 50DUs/IUs are daisy-chained to the DU CHAIN A/B terminals.
- 4-port daisy-chain connection: Given that the same number of 50DUs/IUs are daisy-chained to both the DU CHAIN A/B terminals and the same number of DUs/IUs are daisy-chained to the DU CHAIN C/D terminals.
- "Number of 50DUa + VUs connected" is when using NFC.

NOTICE

- When connecting 50DUs/IUs, never exceed the number of connectable 50DUs/IUs and the connectable length. It may damage the 50CU or the EXT165s.
- Depending on the CU settings, you can also connect the DUs/IUs to the CU LINK terminals by configuring them as DU CHAIN C/D terminals. However, if the number of the DUs connected to the DU CHAIN A/B terminals has not reached the maximum, be sure to connect them to the DU CHAIN A/B terminals.
- The above table and notes are the same for the INT and 50DU. However, a maximum number of 6 INTs can be connected to one system.
- The combinations shown above are representative examples. For other combinations, please contact your local Audio-Technica dealer.
- The position in which to connect the EXT165s should have the same number of 50DUs (A, B, and C in the following diagram) between EXT165-EXT165 as there are between 50CU-EXT165 connected to the 50CU 1 port.
  For example, do the connections as follows for an L1 = 10 m, L2 = 1.5 m, and L3 = 10 m, with 50 units connected to a 1 port daisy-chain connection.

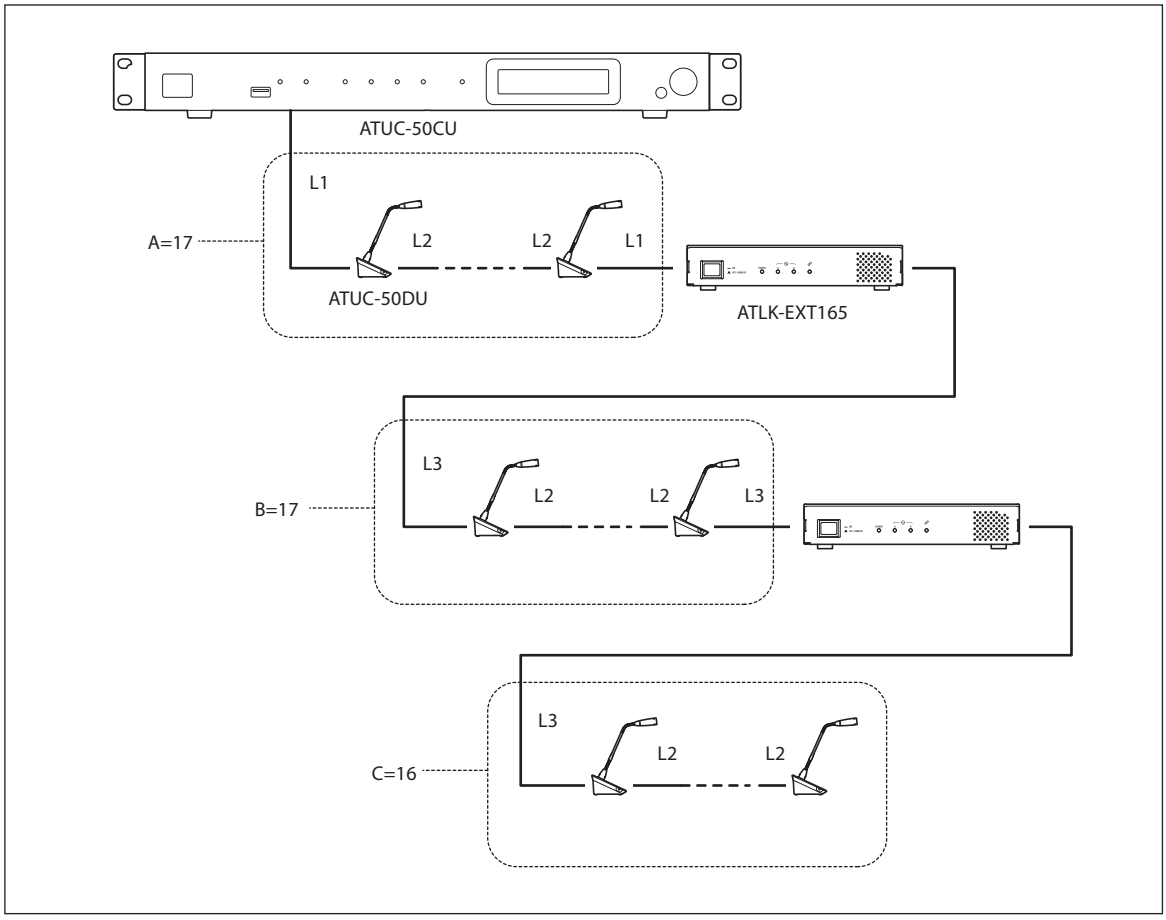

Daisy-chain connection (ATLK-EXT25)

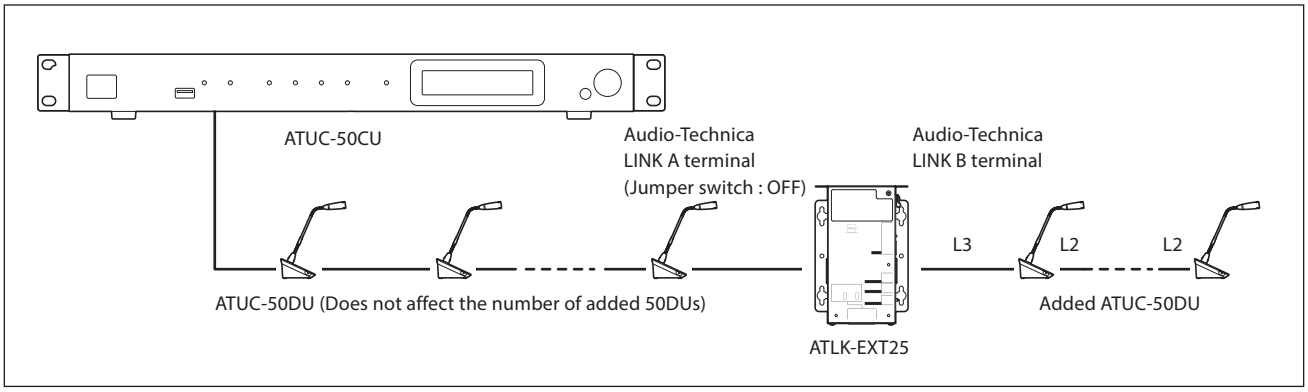

NOTICE
- Turn off the jumper switch of the Audio-Technica LINK A terminal of the ATLK-EXT25.
- Connect the ATUC-50CU side to the ATLK-EXT25 Audio-Technica LINK A terminal, and then connect the ATUC-50DU, which is being added, to the Audio-Technica LINK B terminal.
- When it is EXT25-50DU-...-50DU-50DU-, the distance for [EXT25-50DU] is L3.

Relationship between length of LAN cable to each ATLK-EXT25 and the number of connected units: Daisy-chain connection

Power supply	Length of cables		For each EXT25		
	EXT25-50DU	50DU-50DU	Number of 50DUs added	Number of IUs added	Number of 50DUa + VUs added
	L3	L2			
PoE	10 m	1.5 m-5.0 m	4 units	2 units	2 units
PoE+	10 m	1.5 m-5.0 m	8 units	5 units	4 units
AC adapter (sold separately by Audio-Technica)	10 m	1.5 m-5.0 m	12 units	8 units	7 units

The values in the tables above are calculated based on the following assumptions.

- The number of 50DUs that can be connected is based on the assumption that the speaker output level is the default setting and the ATUC-M is used.
- The number of IUs that can be connected is based on the assumption that the speaker output level is the default setting, and ATUC-M, TALK LED, FLOOR LED, 8-Ω speaker units, 32-Ω impedance headphones, and GPO terminals with LED x 4 (7 mA each) are being used.
- Given that Cat5e or higher cables (shielded cables with conductor size of 24AWG or greater in diameter) are used.
- 1-port daisy-chain connection: Given that one of the DU CHAIN A/B terminals is connected in a 50DU/IU daisy chain.
- 2-port daisy-chain connection: Given that the same number of 50DUs/IUs are daisy-chained to the DU CHAIN A/B terminals.
- 4-port daisy-chain connection: Given that the same number of 50DUs/IUs are daisy-chained to both the DU CHAIN A/B terminals and the same number of DUs/IUs are daisy-chained to the DU CHAIN C/D terminals.
- “Number of 50DUa + VUs added” is when using NFC.

NOTICE

- When connecting 50DUs/IUs, never exceed the number of connectable 50DUs/IUs and the connectable length. It may damage the 50CU or the EXT25s.
- Depending on the CU settings, you can also connect the DUs/IUs to the CU LINK terminals by configuring them as DU CHAIN C/D terminals. However, if the number of the DUs connected to the DU CHAIN A/B terminals has not reached the maximum, be sure to connect them to the DU CHAIN A/B terminals.
- The above table and notes are the same for the INT and 50DU. However, a maximum number of 6 INTs can be connected to one system.
- The combinations shown above are representative examples. For other combinations, please contact your local Audio-Technica dealer.
- The number of 50DUs between EXT25-EXT25 (B and C in the following diagram) should be connected to be as even as possible. For example, do the connections as follows for an L2 = 2.0 m, and L3 = 10 m, with 50 units connected to a 1 port daisy-chain connection.

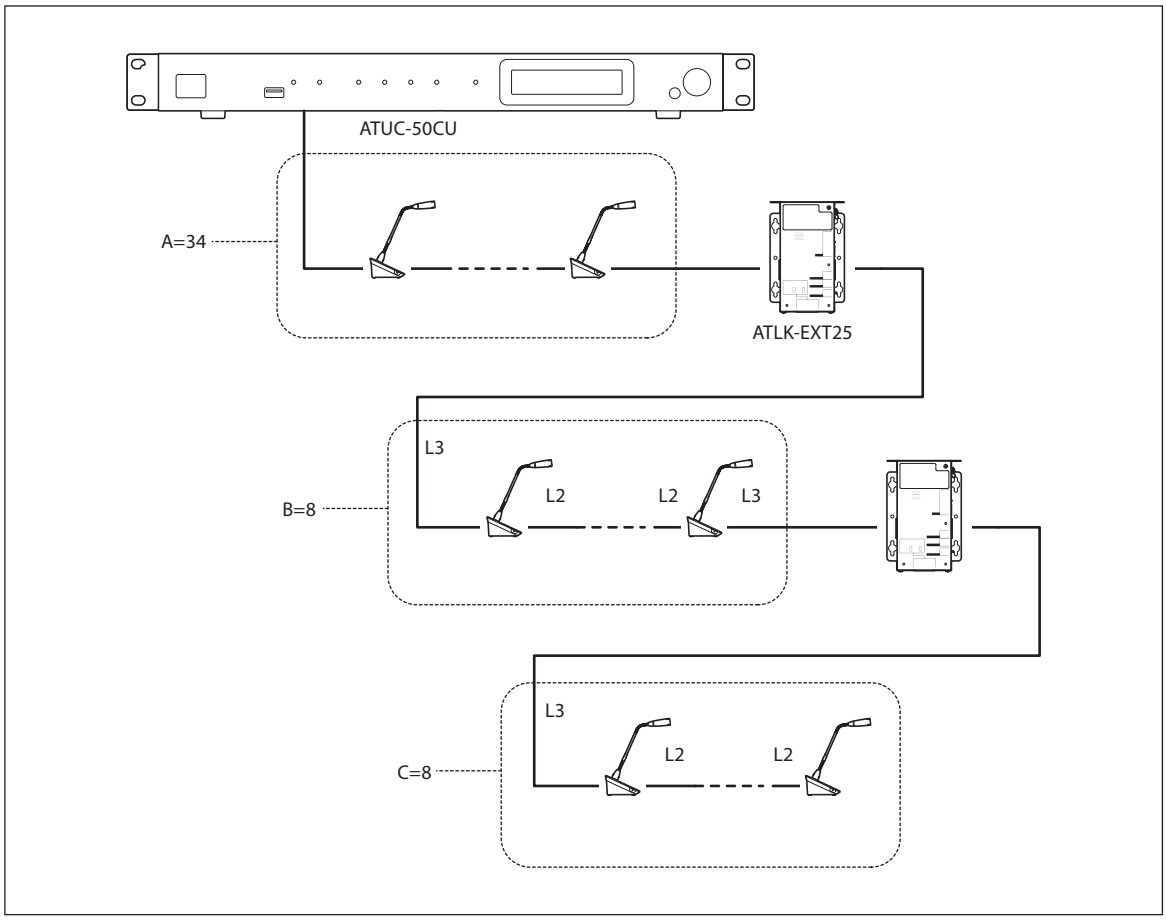

Ring connection (ATLK-EXT165)

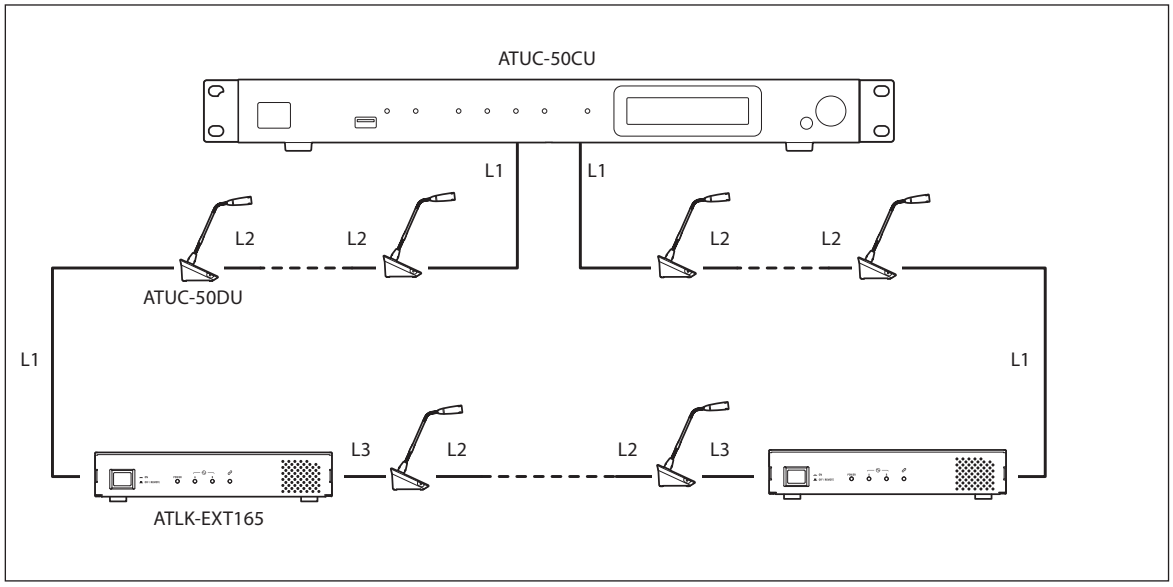

NOTICE
- For a 50CU-50DU-50DU-...50DU-EXT165 connection, the distance between the [50DU-EXT165] is L1.
- When it is EXT165-50DU-...-50DU-50DU-, the distance for [EXT165-50DU] is L3.

Relationship of the LAN cable length, number of units connected and number of EXT165s required: Ring connection

Length of cables			1-ring connection (using 50DUs)		1-ring connection (using IUs)		1-ring connection (using 50DUa + VUs)	
50CU-50DU	50DU-50DU	EXT165-50DU	Number of 50DUs connected	Number of EXT165s needed	Number of IUs connected	Number of EXT165s needed	Number of 50DUa + VUs connected	Number of EXT165s needed
L1	L2	L3						
10 m	1.5 m	10 m	1 to 45 units	0 units	1 to 30 units	0 units	1 to 32 units	0 units
			46 to 50 units	1 unit	31 to 50 units	2 units	33 to 50 units	2 units
50 m	1.5 m	10 m	1 to 36 units	0 units	1 to 24 units	0 units	1 to 26 units	0 units
			37 to 50 units	2 units	25 to 50 units	2 units	27 to 50 units	2 units
100 m	1.5 m	10 m	1 to 24 units	0 units	1 to 16 units	0 units	1 to 17 units	0 units
			25 to 50 units	2 units	17 to 48 units	2 units	18 to 50 units	2 units
10 m	2.0 m	10 m	1 to 43 units	0 units	1 to 29 units	0 units	1 to 31 units	0 units
			44 to 50 units	1 unit	30 to 50 units	2 units	32 to 50 units	2 units
50 m	2.0 m	10 m	1 to 34 units	0 units	1 to 23 units	0 units	1 to 25 units	0 units
			35 to 50 units	2 units	24 to 50 units	2 units	26 to 50 units	2 units
100 m	2.0 m	10 m	1 to 24 units	0 units	1 to 16 units	0 units	1 to 17 units	0 units
			25 to 50 units	2 units	17 to 48 units	2 units	18 to 50 units	2 units
10 m	5.0 m	10 m	1 to 33 units	0 units	1 to 25 units	0 units	1 to 26 units	0 units
			34 to 50 units	2 units	26 to 50 units	2 units	27 to 50 units	2 units
50 m	5.0 m	10 m	1 to 27 units	0 units	1 to 20 units	0 units	1 to 21 units	0 units
			28 to 50 units	2 units	21 to 50 units	2 units	22 to 50 units	2 units
100 m	5.0 m	10 m	1 to 20 units	0 units	1 to 14 units	0 units	1 to 15 units	0 units
			21 to 50 units	2 units	15 to 45 units	2 units	16 to 49 units	2 units

Length of cables			2-ring connection (using DUs)			2-ring connection (using IUs)			2-ring connection (using 50DUa + VUs)		
50CU-50DU	50DU-50DU	EXT165-50DU	Number of 50DUs connected	Maximum number of units connected	Number of EXT165s needed	Number of IUs connected	Maximum number of units connected	Number of EXT165s needed	Number of 50DUa + VUs connected	Maximum number of units connected	Number of EXT165s needed
L1	L2	L3									
10 m	1.5 m	10 m	1 to 25 × 2 units	(total 50 units)	0 units	1 to 16 × 2 units	(total 32 units)	0 units	1 to 18 × 2 units	(total 36 units)	0 units
			26 to 50 × 2 units	(total 100 units)	4 units	17 to 40 × 2 units	(total 80 units)	4 units	19 to 45 × 2 units	(total 90 units)	4 units
50 m	1.5 m	10 m	1 to 23 × 2 units	(total 46 units)	0 units	1 to 15 × 2 units	(total 30 units)	0 units	1 to 16 × 2 units	(total 32 units)	0 units
			24 to 50 × 2 units	(total 100 units)	4 units	16 to 38 × 2 units	(total 76 units)	4 units	17 to 43 × 2 units	(total 86 units)	4 units
100 m	1.5 m	10 m	1 to 20 × 2 units	(total 40 units)	0 units	1 to 13 × 2 units	(total 26 units)	0 units	1 to 14 × 2 units	(total 28 units)	0 units
			21 to 50 × 2 units	(total 100 units)	4 units	14 to 38 × 2 units	(total 76 units)	4 units	15 to 41 × 2 units	(total 82 units)	4 units
10 m	2.0 m	10 m	1 to 25 × 2 units	(total 50 units)	0 units	1 to 16 × 2 units	(total 32 units)	0 units	1 to 18 × 2 units	(total 36 units)	0 units
			26 to 50 × 2 units	(total 100 units)	4 units	17 to 40 × 2 units	(total 80 units)	4 units	19 to 44 × 2 units	(total 88 units)	4 units
50 m	2.0 m	10 m	1 to 23 × 2 units	(total 46 units)	0 units	1 to 15 × 2 units	(total 30 units)	0 units	1 to 16 × 2 units	(total 32 units)	0 units
			24 to 50 × 2 units	(total 100 units)	4 units	16 to 38 × 2 units	(total 76 units)	4 units	17 to 42 × 2 units	(total 84 units)	4 units
100 m	2.0 m	10 m	1 to 20 × 2 units	(total 40 units)	0 units	1 to 12 × 2 units	(total 24 units)	0 units	1 to 14 × 2 units	(total 28 units)	0 units
			21 to 50 × 2 units	(total 100 units)	4 units	13 to 38 × 2 units	(total 76 units)	4 units	15 to 40 × 2 units	(total 80 units)	4 units
10 m	5.0 m	10 m	1 to 24 × 2 units	(total 48 units)	0 units	1 to 16 × 2 units	(total 32 units)	0 units	1 to 17 × 2 units	(total 34 units)	0 units
			25 to 50 × 2 units	(total 100 units)	4 units	17 to 39 × 2 units	(total 78 units)	4 units	18 to 43 × 2 units	(total 86 units)	4 units
50 m	5.0 m	10 m	1 to 22 × 2 units	(total 44 units)	0 units	1 to 14 × 2 units	(total 28 units)	0 units	1 to 15 × 2 units	(total 30 units)	0 units
			23 to 50 × 2 units	(total 100 units)	4 units	15 to 37 × 2 units	(total 74 units)	4 units	16 to 41 × 2 units	(total 82 units)	4 units
100 m	5.0 m	10 m	1 to 19 × 2 units	(total 38 units)	0 units	1 to 12 × 2 units.	(total 24 units)	0 units	1 to 13 × 2 units	(total 26 units)	0 units
			20 to 50 × 2 units	(total 100 units)	4 units	13 to 35 × 2 units	(total 70 units)	4 units	14 to 39 × 2 units	(total 78 units)	4 units

The values in the tables above are calculated based on the following assumptions.

- The number of 50DUs that can be connected is based on the assumption that the ATUC-M is used.
- The number of IUs that can be connected is based on the assumption that ATUC-M, TALK LED, FLOOR LED, 8-Ω speaker units, 32-Ω impedance headphones, and GPO terminals with LED x 4 (7 mA each) are being used.
- Given that Cat5e or higher cables (shielded cables with conductor size of 24AWG or greater in diameter) are used.
- 1 ring connection: Given that a ring connection is used between the A-B terminals of the DU CHAIN A/B terminal.
- 2-ring connections: Given that one ring connection is used for the DU CHAIN A-B terminals and for the DU CHAIN C-D terminals.
- "Number of 50DUa + VUs connected" is when using NFC.

NOTICE
- When connecting 50DUs/IUs, never exceed the number of connectable 50DUs/IUs and the connectable length. It may damage the 50CU or the EXT165s.
- The above table and notes are the same for the INT and 50DU. However, a maximum number of 6 INTs can be connected to one system.
- The combinations shown above are representative examples. For other combinations, please contact your local Audio-Technica dealer.

Ring connection (ATLK-EXT25)

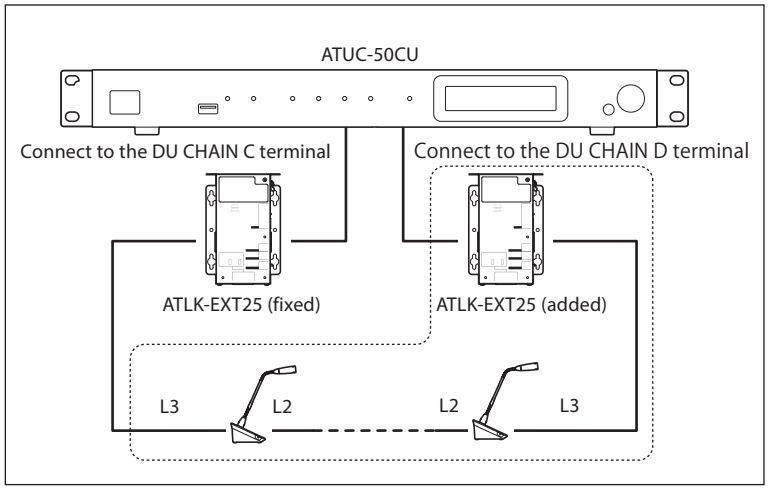

NOTICE
- Turn on the jumper switch of the Audio-Technica LINK A terminal of the ATLK-EXT25.
- For a ring connection, connect 1 unit of ALTK-EXT25 as fixed to the DU CHAIN C terminal, and then for each ATLK-EXT25 unit that you add, you can then add as many 50DUs as are allowed within the dotted line in the diagram.
- When it is EXT25-50DU-...-50DU-50DU-, the distance for [EXT25-50DU] is L3.

Relationship between length of LAN cable to each ATLK-EXT25 and the number of connected units: Ring connection

Power supply	Length of cables		For each EXT25		
	EXT25-50DU	50DU-50DU	Number of 50DUs added	Number of IUs added	Number of 50DUa + VUs added
	L3	L2			
PoE	10 m	1.5 m-5.0 m	2 units	1 unit	1 unit
PoE+	10 m	1.5 m-5.0 m	5 units	3 units	3 units
AC adapter (sold separately by Audio-Technica)	10 m	1.5 m-5.0 m	7 units	5 units	4 units

The values in the tables above are calculated based on the following assumptions.

- The number of 50DUs that can be connected is based on the assumption that the speaker output level is the default setting and the ATUC-M is used.
- The number of IUs that can be connected is based on the assumption that the speaker output level is the default setting, and ATUC-M, TALK LED, FLOOR LED, 8-Ω speaker units, 32-Ω impedance headphones, and GPO terminals with LED x 4 (7 mA each) are being used.
- Given that Cat5e or higher cables (shielded cables with conductor size of 24AWG or greater in diameter) are used.
- 1 ring connection: Given that a ring connection is used between the A-B terminals of the DU CHAIN A/B terminal.
- 2-ring connections: Given that one ring connection is used for the DU CHAIN A-B terminals and for the DU CHAIN C-D terminals.
- “Number of 50DUa + VUs added” is when using NFC.

NOTICE
- When connecting 50DUs/IUs, never exceed the number of connectable 50DUs/IUs and the connectable length. It may damage the 50CU or the EXT25s.
- The above table and notes are the same for the INT and 50DU. However, a maximum number of 6 INTs can be connected to one system.
- The combinations shown above are representative examples. For other combinations, please contact your local Audio-Technica dealer.

CU Link connection:

Up to 3 50CUs can be cascaded (cascade 50CUs using the CU LINK A/B terminals as shown below). Set one of the 50CUs as the primary unit.
Since up to 100 50DU/INTs can be connected to each 50CU, if you use 3 CUs, up to 300 50DU/INTs can be connected in total.

Follow the procedure below to cascade CUs.
① Connect the CU LINK A terminal on the 1st extension 50CU to the CU LINK B terminal on the primary 50CU.
② When cascading 2 extension 50CUs, connect the CU LINK A terminal on the 2nd extension 50CU to the CU LINK B terminal on the 1st extension 50CU.

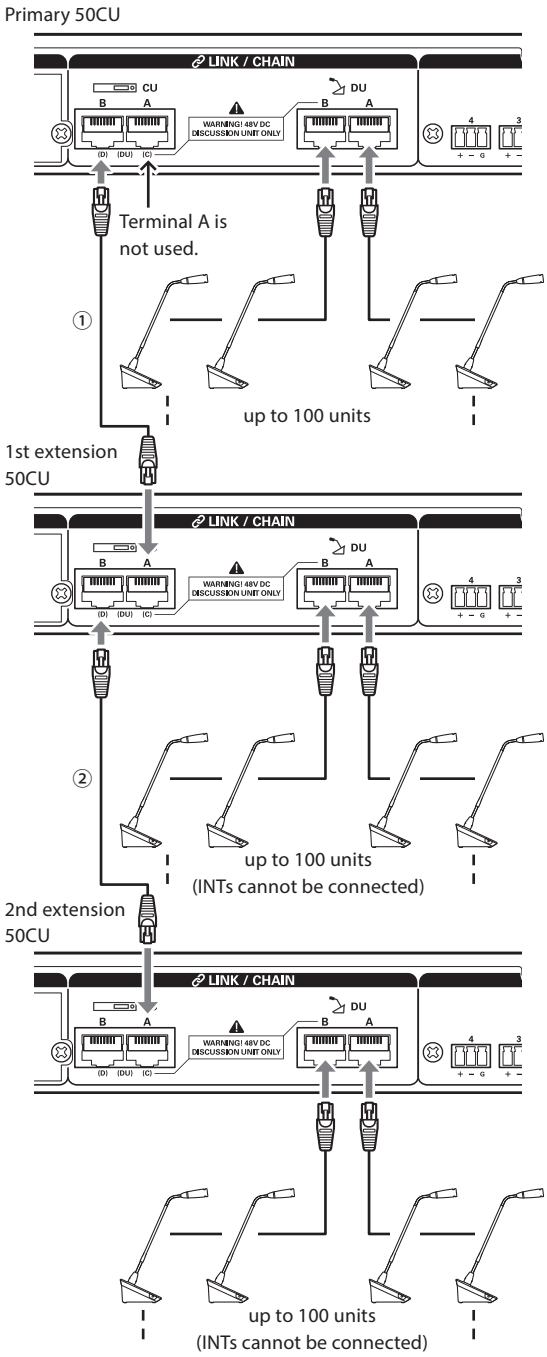

Primary/Extension (*CU Link Mode*):

	Primary 50CU	1st extension 50CU	2nd extension 50CU
2-CU LINK	[Primary]	[Extension Last Unit]	-
3-CU LINK	[Primary]	[Extension Pass Through]	[Extension Last Unit]

- You can either daisy-chain (page 35) or ring (page 35) 50DU/INTs to each 50CU.

NOTICE
- When using only one 50CU without a CU Link connection, be sure to set [CU Link Settings] to [Primary].
  If [CU Link Setting] is set to [Extension Pass Through] or [Extension Last Unit], we cannot assure operations.
- Up to 6 INTs can be connected to the primary 50CU. They cannot be connected to extension 50CUs.

3 Attach the bottom cover to the 50DU/INT.

After connecting the Ethernet cables to the 50DUs/INTs, attach the bottom cover to each 50DU/INT.

- The Ethernet cable is fixed securely between the 50DU/INT and the bottom cover. This helps reduce the weight of the 50DU/INT which bears on the Ethernet cables.
- To lead the cable out to the rear side, use the through hole ①. To lead the cable out to the bottom side, use the through holes ②.

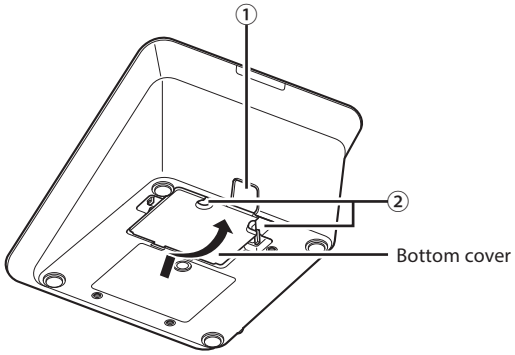

4 Attach the optional bottom weight to the 50DU/INTs.

- When using 50DU/INTs that are not secured to desktops or tabletops, it is recommended to use the optional bottom weight (330g) for secure placement.
- To purchase the optional accessories, contact our sales team.

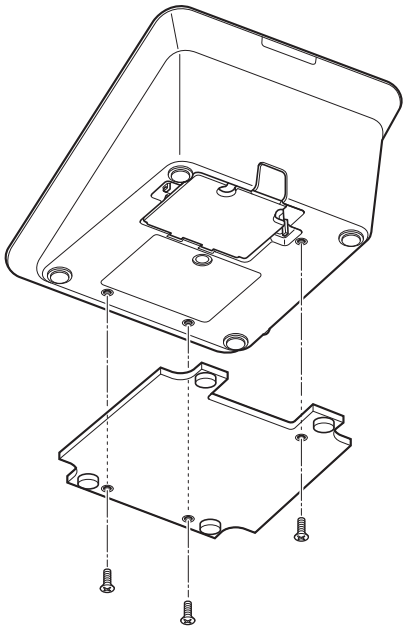

3 Connecting the microphone ATUC-M to the 50DU/INT

1 Connect the ATUC-M to the microphone jack on the 50DU/INT.

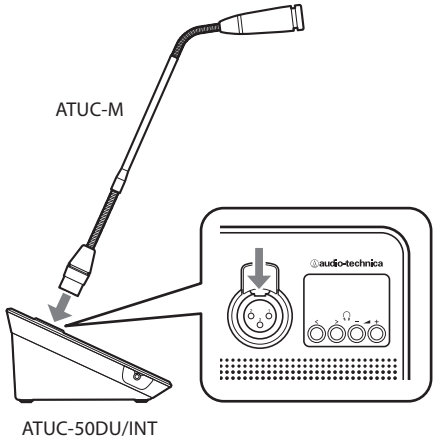

NOTICE
- Insert the ATUC-M connector in until you hear a clicking sound.
- Do not attempt to lift up the 50DU/INT by grabbing onto the ATUC-M. Be sure to hold the main body of the 50DU/INT when lifting it up.
- Slowly bend or extend the flexible part of the ATUC-M. Do not apply excessive force to the ATUC-M when bending it.
- When disconnecting the ATUC-M from the 50DU/INT, securely hold the connector while pressing down the microphone release lever and then remove the ATUC-M.
- Before connecting/disconnecting the ATUC-M, be sure to turn off the power. If you do not turn off the power, malfunction may occur.

4 Connecting an amplifier

1 Connect an amplifier to the OUTPUT BAL. terminal.

Connect an amplifier to amplify sound.
Connect a speaker via the amplifier.

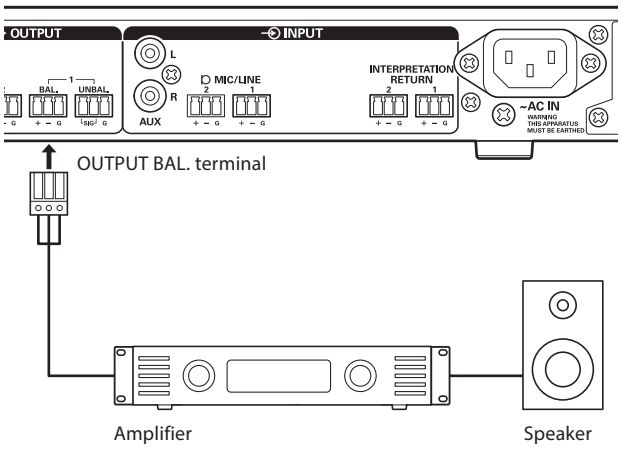

NOTICE
- When connecting external devices to IN/OUT terminals, do so after cutting the phantom power supply of the external devices. If you leave the phantom power supply on, it may cause unexpected malfunctions.
- When connecting external devices, refer also to the instruction manuals supplied with them.

5 Turning on the 50CU and testing 50DU operations

After checking that all the connections from steps 1 to 4 have been done properly, follow the procedure below to turn on the power of the 50CU.

1 Check that all the PA devices such as an amplifier and mixer are off.

2 Connect the supplied AC power cord to the 50CU.

NOTICE
- Be sure to use the supplied AC power cord. Using an AC power cord other than the supplied one may cause problems such as damage to the 50CU, which can be very dangerous.
- Be sure to connect the AC power cord into a properly grounded wall outlet. Improper grounding can cause electrical shock.
- Be sure that the 50CU is securely grounded to a single ground point. Grounding to multiple ground points can cause ground loops, resulting in noise generation such as a humming noise

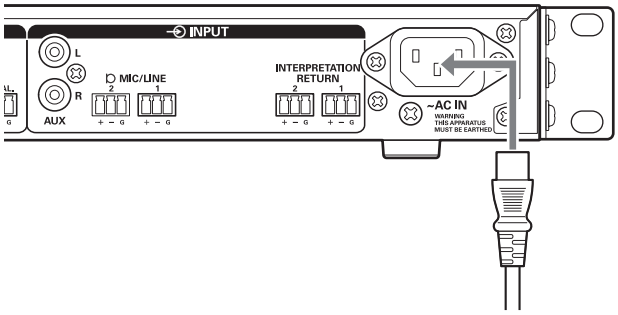

3 Press the power button.

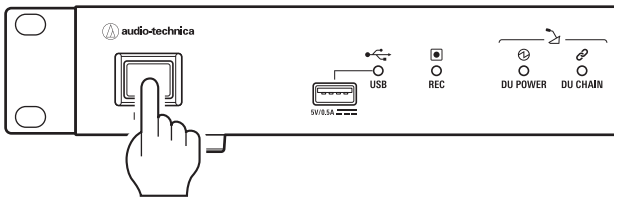

NOTICE
- When one or two extension 50CUs are connected to the system, turn on the power of the primary 50CU and extension 50CU(s) at the same time. If the time period between each power-on time is significantly long, a successful CU Link may not be established.

- Configure the network setting from the 50CU (› page 30) as necessary.

4 After the 50CU starts up, press the (talk) button of each 50DU to confirm operation.

NOTICE • When the 50DUs are placed close to each other, excessively raising the volume of the 50DU speakers may cause howling. In such a case, move the 50DUs farther away from each other or decrease the volume.

5 After checking that the 50DUs are operating, turn off the 50CU before proceeding to the next step for connecting the 50CU to a network device.

NOTICE • If the power of the amplifier is on, first turn off the power of the amplifier.

Entire system connection diagram (2)

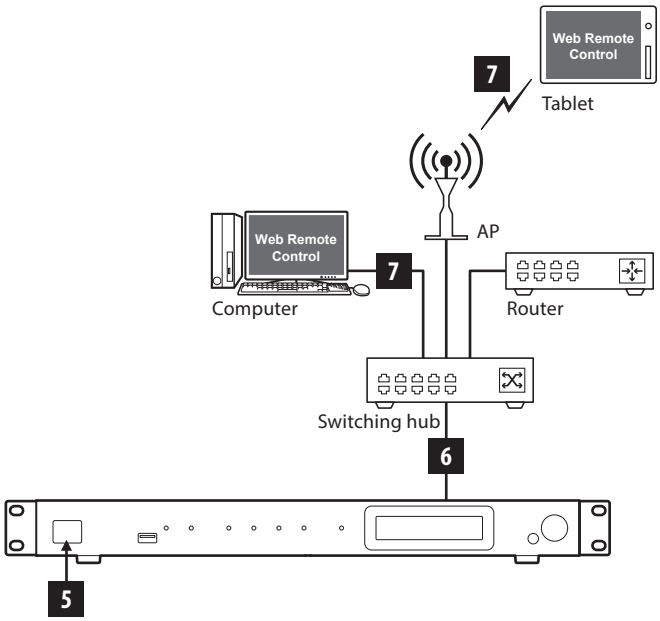

6 Connecting to a network

Configure the detailed conference system settings via Web Remote by connecting the 50CU to a network.

1 Use an Ethernet cable to connect the 50CU to a switching hub via the NETWORK terminal.

NOTICE • Be careful NOT to connect the Ethernet cable from your network device to the CU LINK terminal or DU CHAIN terminal. This can cause damage to the connected device.

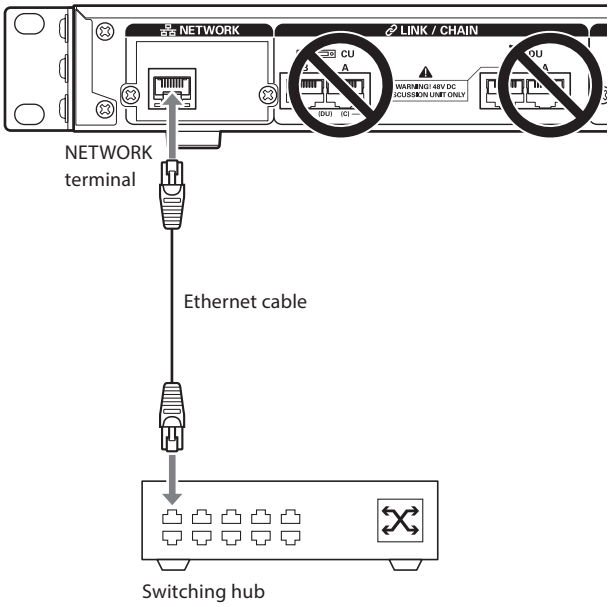

7 Connecting a computer or mobile device to a network

About network settings

- If there is a DHCP server running on the network, the 50CU automatically configures network settings including the IP address.
- If there is no DHCP server running on the network, manually configure network settings including the IP address from the Set Menu → *System Setting* (› page 11).
- When configuring settings manually, inquire with the network manager regarding setting items.

NOTICE • We decline any and all responsibility for communication errors and failures regarding your network environment and external devices.

• Disable the firewall setting on your computer. Otherwise, "Locate" will not recognize the 50CU.

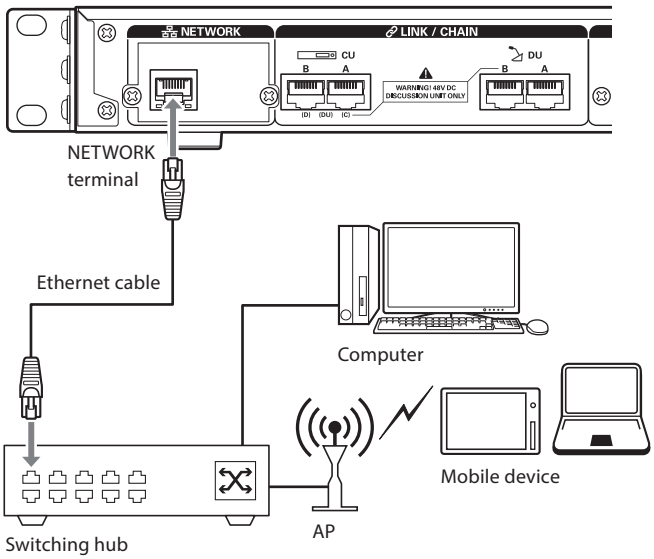

To connect the 50CU directly to your Windows PC/ Mac using an Ethernet cable

If your computer is equipped with an NIC (Network Interface Card), you can also connect the 50CU directly to the computer using an Ethernet cable.

NOTICE • Be careful NOT to connect the Ethernet cable from the computer to the CU LINK terminal or DU CHAIN terminal. This can cause damage to the computer.

1 Use an Ethernet cable (straight) to connect the NETWORK terminal on the 50CU and the Ethernet terminal on a computer/Mac.

2 In the network settings on your Windows PC/Mac, select "Obtain an IP address automatically" on your Windows PC, or "Using DHCP" on your Mac, and then save the settings.

3 Start up the 50CU and from the *Set* Menu → *System Info* → *IP Config Mode*, select *Auto*. (› page 11).

4 Press the BACK button to close the Set Menu.

• After changing the network setting item(s), restart the 50CU to enable the setting values.

Since there is no DHCP server, IP addresses are automatically assigned to the Windows PC/Mac and the 50CU using the APIPA (Automatic Private IP Addressing) feature.

ATUC-IR System

Example of IR system connections

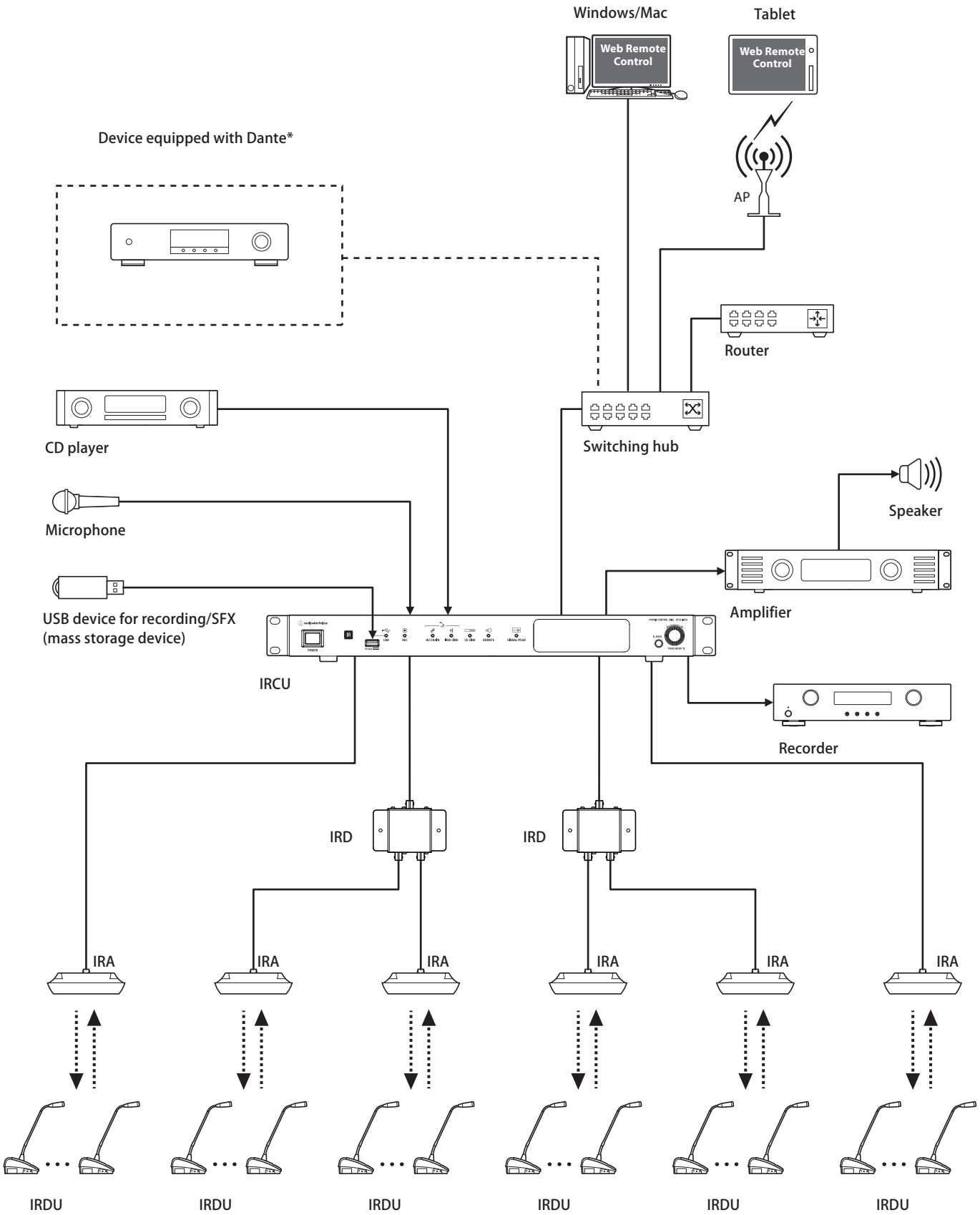

*The ATUC-IRCUDAN can be connected to Dante-enabled devices.

Part Names and Functions (ATUC-IR System)

ATUC-IRCU/ATUC-IRCUDAN

Front panel

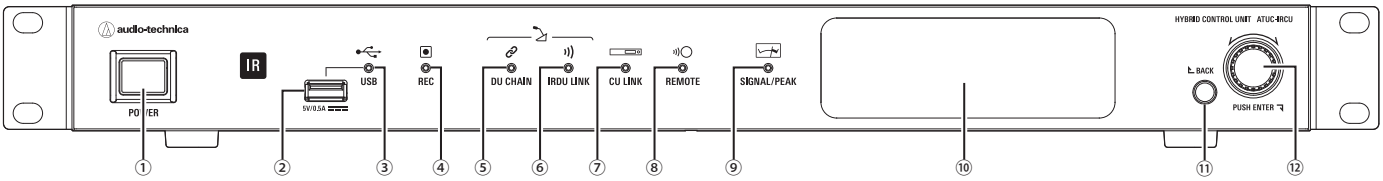

① Power switch

Turns the power on and off.

② USB terminal

The following operations are possible by connecting a USB device (mass storage device) such as a USB flash drive or USB hard drive.

- Recording sound
- Playing buzzer and chime
- Importing/exporting preset data
- Upgrading the firmware

NOTICE
- Supports FAT16 and FAT32 file systems
- Maximum storage capacity: 2 TB
- Maximum file size: 2 GB
- Does not support USB hubs.
- Do not use extension cables.
- Do not attempt to use USB devices (mass storage devices) that have been cracked, deformed or repaired using adhesive tape or the like.
- Do not save or create any files or folders unnecessary for this system on the USB device (mass storage device). Doing so may affect system operations.
- The IRCU/IRCUDAN are not compatible with USB devices (mass storage device) with special functions such as a security function.

③ USB access indicator

Indicates the connection status of the USB device (mass storage device).

- In an access state: lit green

NOTICE
- Do not remove the USB device (mass storage device) while the indicator is lit green; doing so may destroy data.

④ REC (recording) indicator

Indicates the recording status.

- In a recording state: lit green
- In a recording-pause state: blinks green
- While not recording: remains off

NOTICE
- If you remove the USB device (mass storage device) while in a recording state or recording-pause state, the recorded file may not be written correctly. Do not remove the USB device (mass storage device) during recording.
- We recommend recording important content simultaneously on another recording device as a backup.

⑤ DU CHAIN indicator

- In a normal state: lit green
- In an abnormal state (such as when IRDU communications fail): blinks green
- In a DU disconnected state: remains off

⑥ IRDU LINK indicator

- In a normal state: lit green
- In an abnormal state (such as when IRDU communications fail): blinks green
- In an IRDU disconnected state: remains off

⑦ CU LINK indicator

- In a CU Link state: lit green
- In an abnormal state (such as when failing in communication with a CU): blinks green
- In a CU Link cut-off state: remains off

⑧ REMOTE (remote control) indicator

- In a communication state: lit green
- In an abnormal state (such as when failing in external transmission retry): blinks green
- In a non-communication state: remains off

⑨ SIGNAL/PEAK indicator

Indicates the audio signal level as follows:

- 60dBFS or higher: lit green
- 20dBFS or higher: lit amber
- 2dBFS or higher: lit red

Adjust the level so it does not light red while operating.

⑩ Display

⑪ **BACK button**

Returns to the previous or upper screen/item.
Press and hold this button to return to the HOME screen from any screen.

⑫ **Jog dial/ENTER button**

Rotate the jog dial to select the desired item and then press the ENTER button to confirm.
Rotating the jog dial also adjusts the setting values.

- **Locking the operation buttons (Key Lock function)**
  Press the BACK button and ENTER button simultaneously for over 2 seconds to activate the Key lock function, and thus lock all front panel operations except for the Power switch.
- **Unlocking the operation buttons**
  When the operation buttons are locked, press the BACK button and ENTER button simultaneously for over 2 seconds to unlock the operation buttons.

Display and jog dial operations:

HOME screen

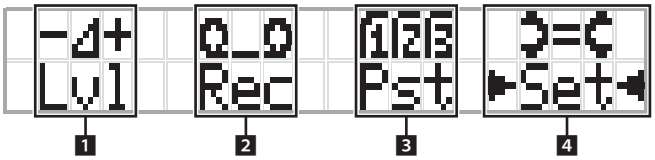

The item with ► ◄ is the currently selected item.
By rotating the jog dial, move ► ◄ to select the operation you want to perform and then press the ENTER button.

1 Master level adjustment (Lvl)

Master level
-50 -40 -30 -20 -12 -6 0 6 12 Peak (dBu)

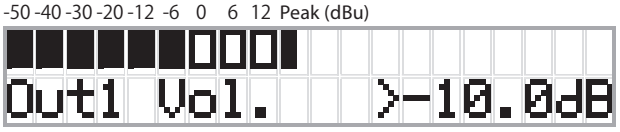

- Rotate the jog dial to adjust the IRCU output level (OUTPUT 1).
- While pressing the ENTER button, rotate the jog dial to adjust the level in 10-step increments.
- Be sure that the Peak indicator does not light up while adjusting the level.

2 Recording operations (Rec)

R (Remaining recording time)/*E* (Elapsed recording time) display
-50 -40 -30 -20 -12 -6 0 6 12 Peak (dBu)

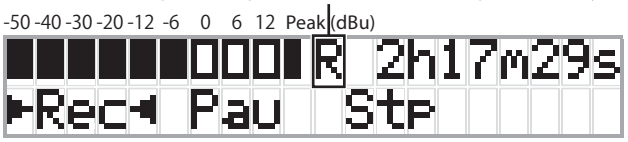

- Rotate the jog dial to select *Rec* (Start recording)/ *Pau* (Pause)/*Stp* (Stop)/*R* or *E* (Recording time display) and then press the ENTER button to confirm.
- Select the time display on the top right side of the screen using the jog dial and then press the ENTER button to switch the display between *R* (Remaining recording time)/*E* (Elapsed recording time).
- To adjust the recording level, move ► ◄ to the recording level meter at the top left of the screen to display *Rec Lvl* and then press the ENTER button to enter recording level adjustment mode. Rotate the dial to adjust the recording level being sure that the Peak indicator does not light up.
- While pressing the ENTER button, rotate the jog dial to adjust the level in 10-step increments.

3 Conference preparation (Pst)

- [1] *Recall Presets*: Rotate the jog dial to move ">" to the item you want to recall and then press the ENTER button to confirm.
- [2] *Conf. Setup*: Change or check the conference settings. Rotate the jog dial to move ">" to the item you want to change or check and then press the ENTER button to confirm.

Pst Menu Items:

Settings can also be configured via Web Remote. The item names in parentheses ( ) are for Web Remote.

[1]*Recall Presets*
[2]*Conf. Setup*
01 Conference Mode (Conference Mode)
02 NOM (Number of Open Mics)
03 Auto Mic Off (Auto Mic OFF)
04 Override Mode (Override Mode)
05 Max Queue (Maximum in Queue)
06 MicON Trigger (Mic ON Trigger / Mic ON Trigger for Priority)
07 MicON Hold Time (Mic ON Hold Time)
08 Interrupt Option (Interrupt Option)

- Items that can be configured from [2] *Conf. Setup* differ depending on the conference mode.
- For details on items, see "Menu items" in the Web Remote Manual.

4 Configuring settings (Set)

Rotate the jog dial to move ">" to the desired item or value and then press the ENTER button to confirm.
For details on setting items, see "Set Menu Items" (›page 65).

Rear panel

* The serial number label is located on the top panel.

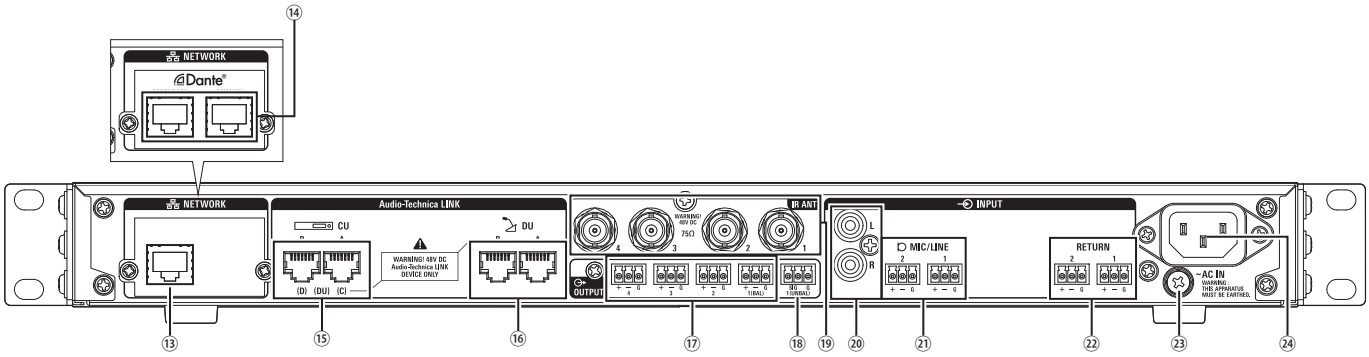

NOTICE
- Refer also to the instruction manuals supplied with the external devices.
- Be careful NOT to connect the Ethernet cable from your network device to the CU LINK terminal or DU CHAIN terminal. This can cause damage to the connected device.

⑬ NETWORK terminal
- RJ-45
- Use for connecting to a local area network when controlling from an external device via the Web Remote Control or IP remote function.

⑭ Dante network terminals (ATUC-IRCUDAN)
- RJ-45
- Connect to Dante audio network, or use for connections when controlling externally through Web Remote/IP remote.
- The primary terminal and secondary terminal mode settings are shown in the following table.

Mode	Connected device	
	Primary	Secondary
Switched (Default)	Dante network Web Remote/external control	Dante network Web Remote/external control
Redundant	Dante network (primary) Web Remote/external control	Dante network (secondary)
Split	Web Remote/external control	Dante network

⑮ CU LINK A/B terminals, DU CHAIN C/D terminals
- RJ-45
- Use for cascading multiple CUs.
- You can also configure these terminals as DU/IU/INT terminals.

⑯ DU CHAIN A/B terminals
- RJ-45
- Use for connecting DU/IU/INT. You can daisy-chain multiple DU/IU/INTs as well as connect multiple DU/IU/INTs in a ring using the A/B terminals.

⑰ Analog output (balanced) terminals: OUTPUT 1-4 (BAL)
- Euroblock
- Pin arrangement: “+” Hot/“–” Cold/“G” GND

⑱ Analog output (unbalanced) terminals: OUTPUT1 (UNBAL)
- Euroblock
- Pin arrangement: “SIG” Signal (2 systems)/“G” GND

⑲ Infrared input/output terminals: IR ANT
Use for connecting ATUC-IRA.
- BNC connector

⑳ Analog input (unbalanced) terminals: INPUT (AUX)
- RCA

㉑ Analog input (balanced) terminals: INPUT (MIC/LINE 1-2)
- Euroblock
- Pin arrangement: “+” Hot (supports phantom power)/“–” Cold (supports phantom power)/“G” GND
- The input type can be switched between MIC and LINE

㉒ Analog input (balanced) terminal: INPUT (INTERPRETATION RETURN 1-2)
- Euroblock
- Pin arrangement: “+” Hot/“–” Cold/“G” GND
- Inputs audio signals from simultaneous interpretation system

㉓ Ground screw
Since the supplied AC power cord has a three-pronged plug, as long as your AC power wall outlet is grounded properly, the CU will also be grounded properly.

㉔ AC inlet (AC IN)
Connect the supplied AC power cord.

NOTICE
- Do not plug in the AC power cord until all other connections, including CU extension and DU/IU/INT/IRDUs, have been completed.
- Be sure that the CU is securely grounded to a single ground point. Grounding to multiple ground points can cause ground loops, resulting in noise generation such as a humming noise.

ATUC-IRDU

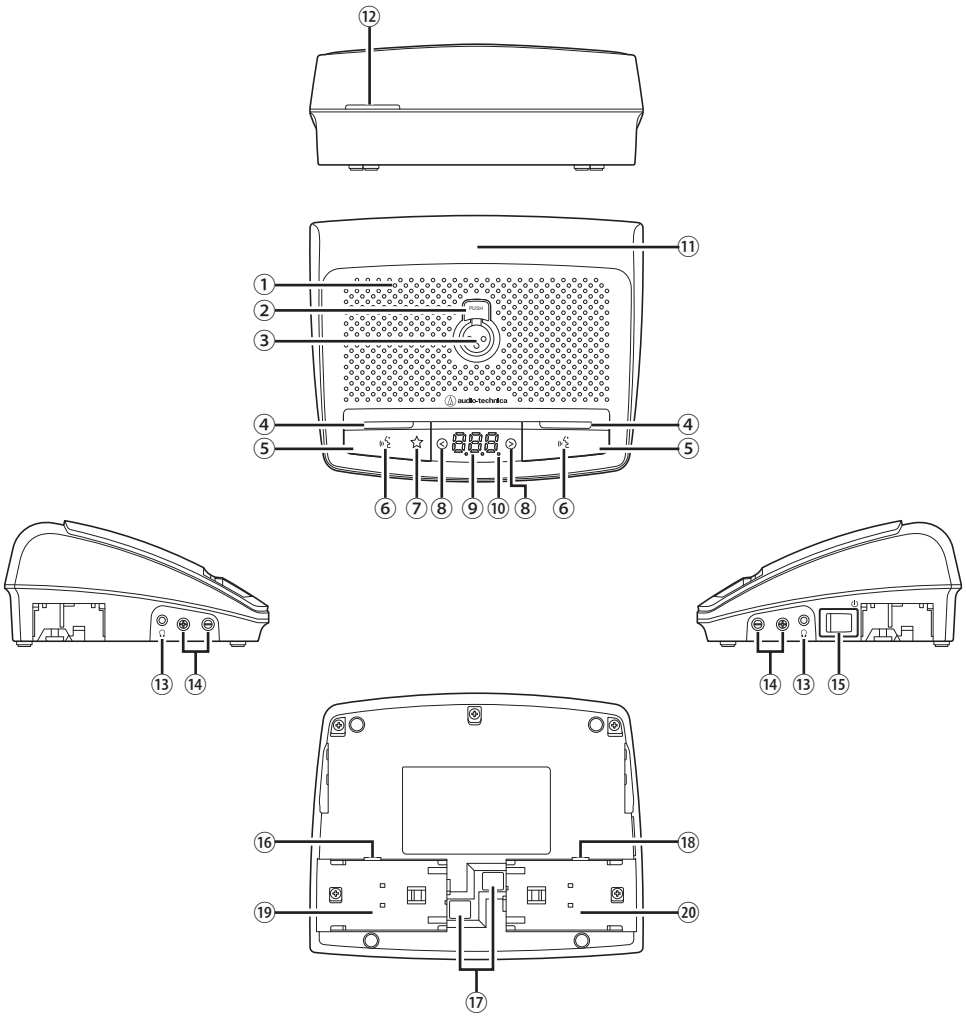

① **Built-in speaker**
Outputs conference audio.

② **Microphone release button**

③ **Microphone jack**
Connect a microphone.
* ES925/XLR and a typical 3-pin XLR type microphone, as well as the ATUC-M series microphones, can be connected.

④ **Multifunction LED**
Indicates the state of talking on the IRDU.
- While talking: lit red
- While requesting to talk: blinks green
- When talk request is rejected: blinks green (blinks 4 times quickly, then turns off)
- Talking off: off
- Self-muting: lit white

- The LEDs can change to 9 colors. See the Web Remote Edition.

⑤ **Multifunction button**
Press this button to send a request to talk. Press the button again to finish talking or cancel the request to talk. Also, if priority is set to on for an IRDU, pressing and holding this button can stop other IRDUs from talking or mute their audio.

When Priority Is Off

Two Person Mode	Conference Mode	Talk Mode	Left Button	Right Button
OFF	Free Talk	Voice	Self Mute	Self Mute
		All Button Toggle	Self Mute	Talk ON
		Push to Talk	-	Talk ON
	Request to Talk	All Button Toggle	Self Mute	Talk ON
	Full Remote	-	Self Mute	Self Mute
Talk ON	Free Talk	All Button Toggle	Talk ON (speaker 1)	Talk ON (speaker 2)
		Push to Talk	Talk ON (speaker 1)	Talk ON (speaker 2)
	Full Remote	-	Self Mute	Self Mute

When Priority Is On

Talk Mode	Left Button*	Right Button
All Button Toggle Push to Talk	Cut/Mute	Talk ON
	Permit Next	Talk ON
Voice	Cut/Mute	Self Mute
	Permit Next	Self Mute

* Depends on the "Left Button Function Assign" setting.

⑥ **(talk) LED**

⑦ **Cut/mute LED**

⑧ **</> monitor channel selection buttons**

While you use these buttons, the currently selected monitor channel appears on the display.

- FL: Audio from floor channel
- 01 - 03: Audio from groups 1 to 3.

⑨ **Display**

When changing the monitor channel or adjusting the volume level, the currently set value is displayed.

⑩ **Power LED**

The dot on the far right is always lit while the power is on.

⑪ **Infrared transmitter**

⑫ **Rear LED**

Indicates the talking state and the remaining charge in the battery.

- While talking: lit
- While requesting to talk: blinks
- Talking off: off (can be changed to dimmer)
- Battery low: blinks orange

- The LEDs can change to 9 colors.

⑬ **Headphone jack**

Speech from the selected monitor channel is output.

⑭ **–/+ Headphone volume adjustment buttons**

When operating these buttons, the current volume level (0 to 20) is shown on the display.

⑮ **Power switch**

⑯ **AC adapter jack**

⑰ **Rechargeable battery/rechargeable battery cover release button**

⑱ **Service jack**

⑲ **Battery slot 1**

⑳ **Battery slot 2**

Range of light reception

The range at which the IRDU can receive infrared light is shown below.

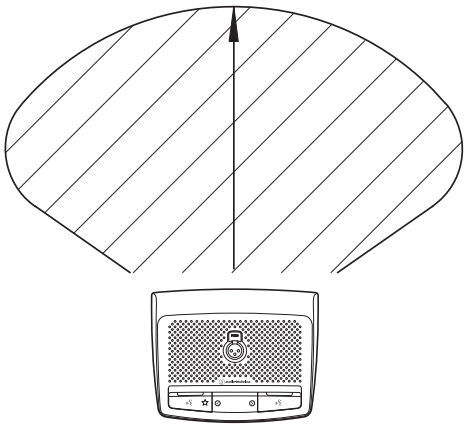

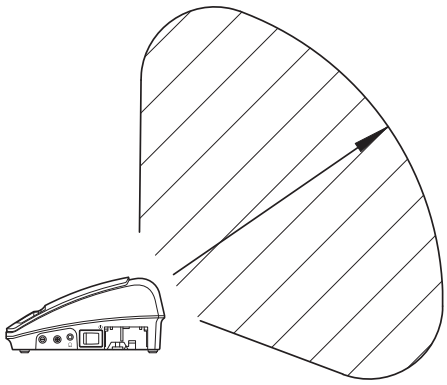

ATUC-M

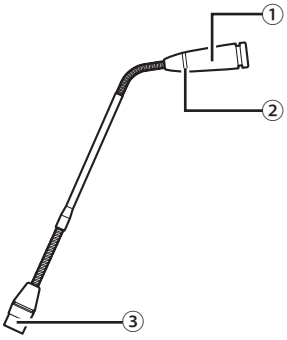

① **Microphone**

② **Ring LED**
Lights red when the microphone is activated.
Blinks red while waiting to talk.

③ **Connector**

ATUC-IRA

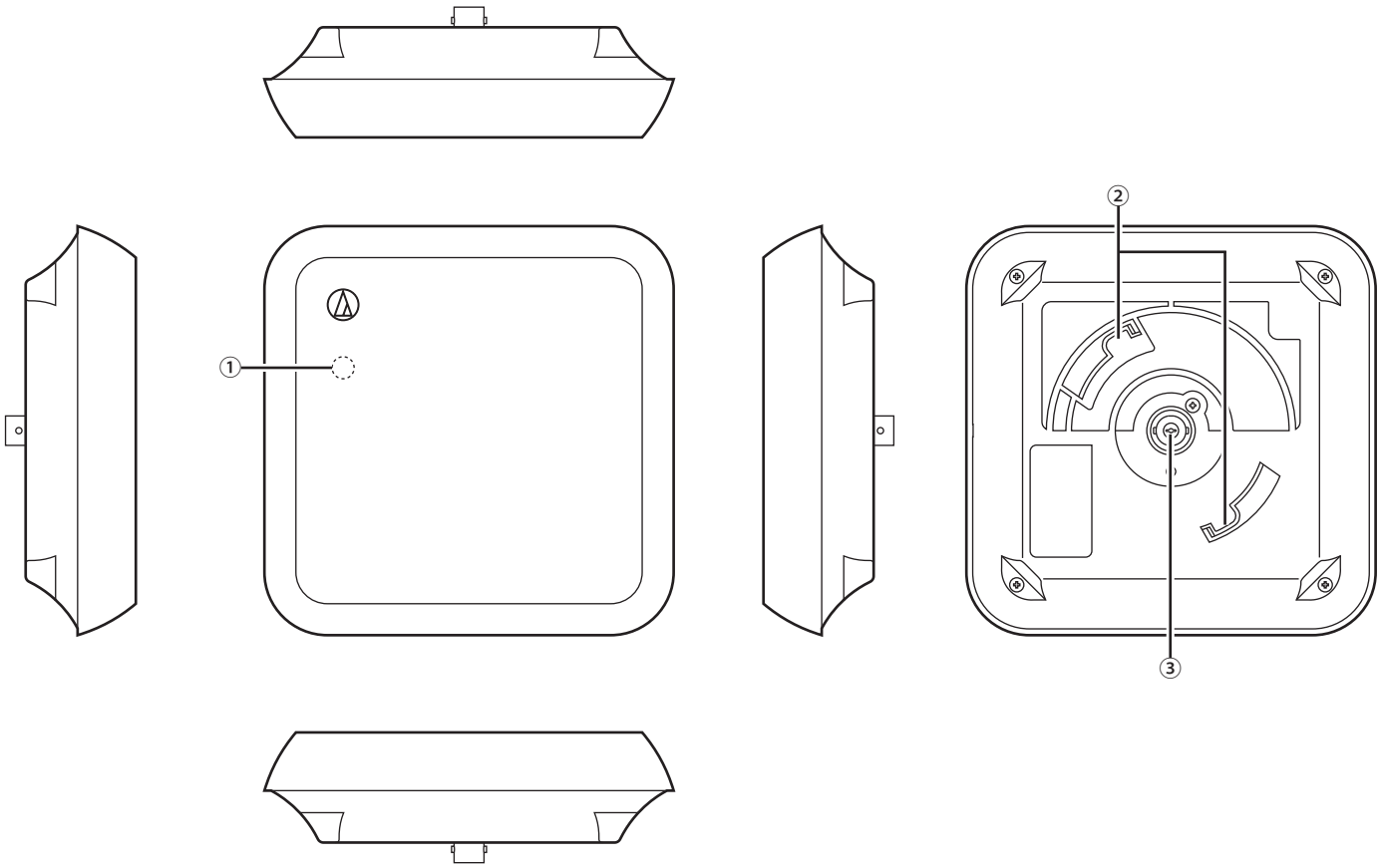

① **Power LED**

Lights when the power to the IRCU is on, after wiring is complete.

② **Hook for mounting**

Use to mount on the mounting bracket (included accessory).

③ **BNC connector**

* The BNC cable is not an included accessory.

ATUC-IRD

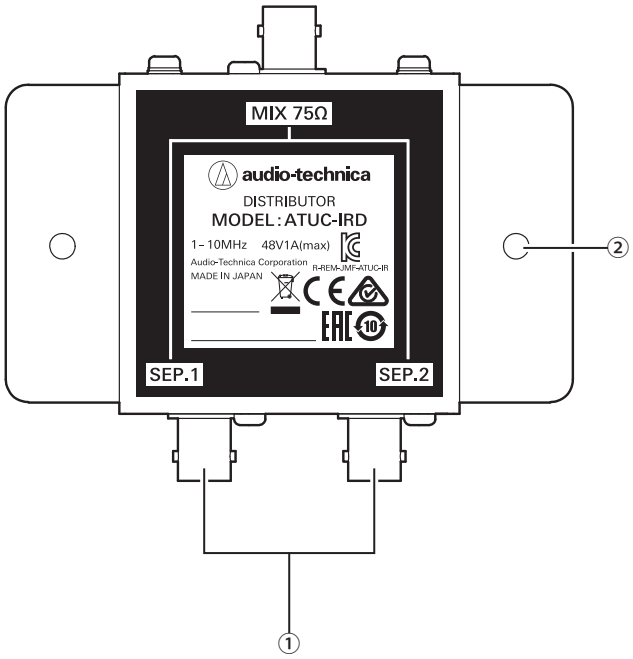

① **BNC connectors**

Connect to BNC cables.

② **Mounting holes**

Holes used to mount IRD.

· The BNC cable is not an included accessory.

ATCS-B60

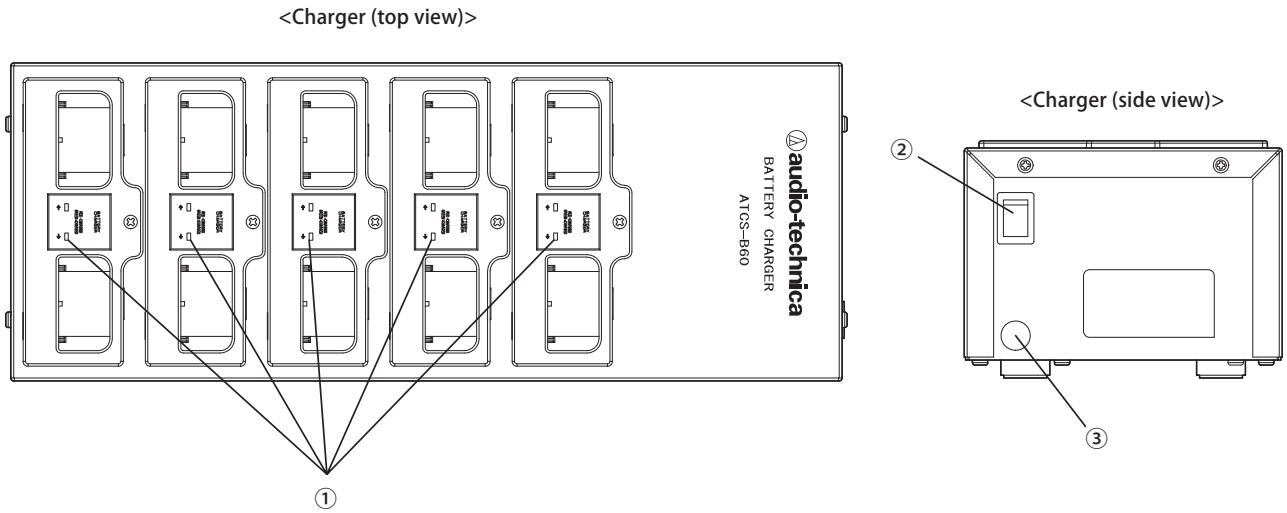

① **Charging state indicator LED**

· Charging: Lights red

· Charging complete: Lights green

· Error: Flashes red

② **Power switch**

Turns the power on and off.

③ **AC adapter connector**

Connect the connector from the AC adapter.

Using the Charger

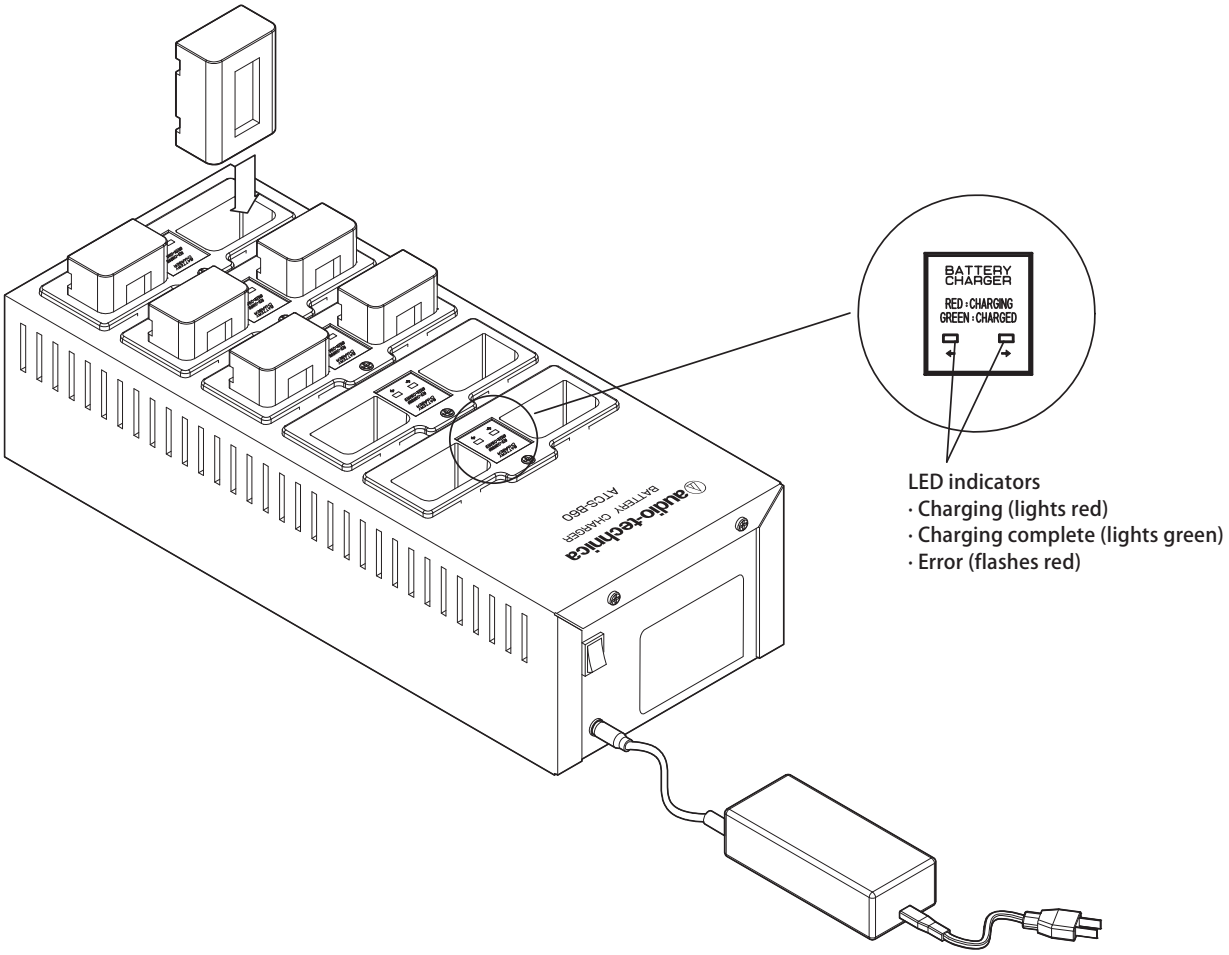

1 Insert the rechargeable battery into the charger slot.

If a rechargeable battery is facing the wrong way, the LED does not light.

2 Charging state indicator LED lights red.

If a charging error occurs, the LED flashes red. If this happens, insert the rechargeable battery again.

3 Charging is complete when the charging state indicator LED lights green.

Charging finishes within about 5.5 hours. Charging times vary depending on the charge remaining in the rechargeable batteries.

NOTICE
- Operating temperature is 10 to 30°C and storage temperature is 0 to 20°C.
- Remove the rechargeable batteries from the B60 if they will not be used for an extended period of time. If you leave the rechargeable batteries in the B60, while its power is turned off, for a long period of time, the rechargeable batteries will over discharge, which may drastically shorten their service lives or prevent them from recharging. If you will not be using the rechargeable batteries for a long time, store them without charging them, and then recharge them before you use them.
- They can be recharged about 300 times.

Using Dante

The IRCUDAN supports Dante network audio.
It is possible to output ATUC-IR audio to a Dante device or to input audio from a Dante device to an IRCU.

For details about Dante network audio, see the Audinate home page (www.audinate.com).

Connecting IRCUDAN in a Network

Network terminal mode settings

1. Explanation for setting up from OLED

Set menu → System settings → Network Config, and then set Config Mode.

2. Setting up from Web Remote

See the Web Remote Edition of the instruction manual.

・The settings can also be changed from the Dante Controller (an application provided by Audinate)

For details about Dante Controller, see the Audinate home page (www.audinate.com).

Connections in different modes

Switched (default settings)

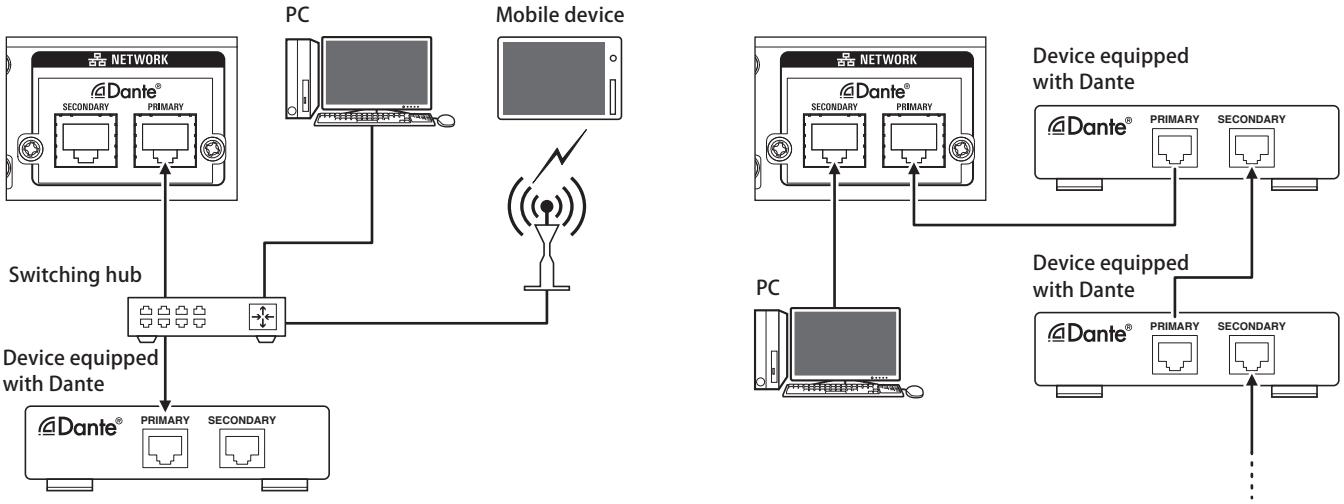

* Switching hubs used in Dante networks must be gigabit compatible.
  Refer to the Audinate page for specifications required for switching hubs that can be used.

Connect Dante audio and the external control of the IRCU to either the primary or secondary terminal.
As shown in the diagram, you can connect a PC or Dante device directly to the network port on the IRCU.

Redundant Audio

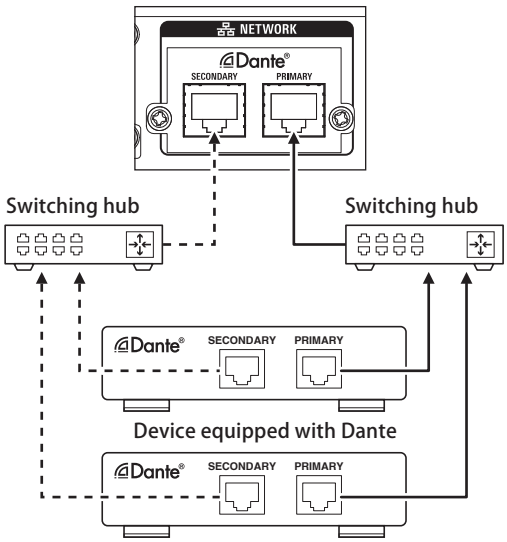

In redundant audio mode, independent networks for both the primary and secondary are needed.
If a fault occurs, for whatever reason, on the Dante primary side network, the system automatically switches to the Dante audio on the secondary network.

Split

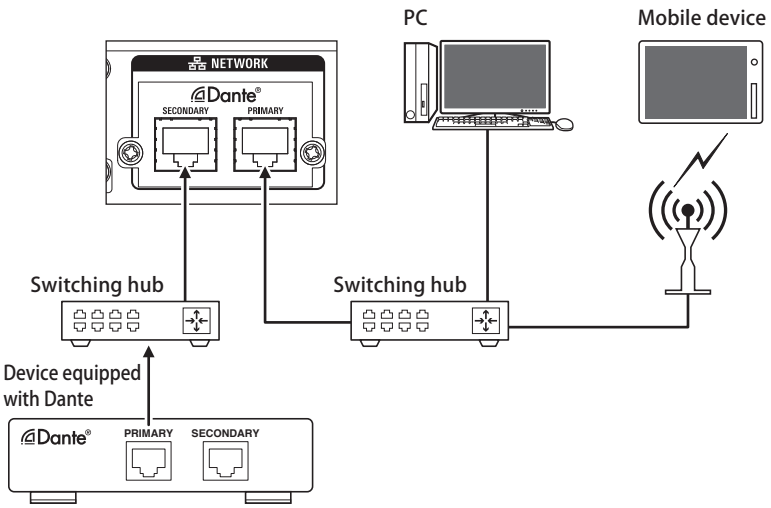

In split audio mode, independent networks for both the primary and secondary are needed.
The primary is the IRCU external control terminal and the secondary is the Dante audio terminal.

IRCU Dante channel list

No	Dante transmission channel	Dante Receiving channel
1	Active Mic 1	Mic/Line 1
2	Active Mic 2	Mic/Line 2
3	Active Mic 3	Aux L
4	Active Mic 4	Aux R
5	Active Mic 5	Language1-1
6	Active Mic 6	Language1-2
7	Active Mic 7	Language2-1
8	Active Mic 8	Language2-2
9	Active Mic 9	Language3-1
10	Active Mic 10	Langauge3-2

No	Dante transmission channel	Dante Receiving channel
11	Mic/Line 1	
12	Mic/Line 2	
13	Aux L	
14	Aux R	
15	Retrun 1	
16	Return 2	
17	Output 1	
18	Output 2	
19	Output 3	
20	Output 4	
21	Group 0	
22	Group 1	
23	Group 2	
24	Group 3	
25	Floor	
26	Language 1	
27	Language 2	
28	Language 3	

Changing settings on the ATUC-IRCU/ ATUC-IRCUDAN

You can change IRCU/IRCUDAN settings by selecting “Set” on the HOME screen of the display. Changeable items are as follows.
For more detailed settings and individual settings for each DU/IU/INT, use Web Remote.

- If you change the network setting item(s), then you must restart the IRCU/IRCUDAN to enable the setting values.

Set Menu Items

[1] System Setting	
01 Device Name	ATUC-IR
02 Link Port Set	CU A/B, DU C/D
03 CU Error Notice	On, Off
04 Network Config	
01 Config Mode	Switched, Redundant Audio, Split
02 Latency	250 µsec, 500 µsec, 1 msec, 2 msec, 5 msec
05 IP Setting	
01 IP Port Set.	
01 IP Config Mode	Auto, Static
02 IP Address	0.0.0.0 - 255.255.255.255
03 Subnet Mask	0.0.0.0 - 255.255.255.255
04 Gateway Address	0.0.0.0 - 255.255.255.255
02 Dante Port Set.	
01 IP Config Mode	Auto, Static
02 IP Address	0.0.0.0 - 255.255.255.255
03 Subnet Mask	0.0.0.0 - 255.255.255.255
04 Gateway Address	0.0.0.0 - 255.255.255.255
06 Allow Discovery	On, Off
07 IP Ctrl Setting	
01 IP Ctrl Port No	00001 - 65535
02 IP Ctrl Ntfy	On, Off
03 Audio Level Ntfy	On, Off
04 M-cast Adrs	0.0.0.0 - 255.255.255.255
05 M-cast Port No	00001 - 65535
08 Auto Mode Change	
01 Auto Mode Change	On, Off
02 Hold Time(Err)	20, 30, 40 seconds
09 NTP Setting	
01 NTP	On, Off
02 NTP Adrs	0.0.0.0 - 255.255.255.255
03 NTP Port	00001 - 65535
04 Time Zone	UTC –12:00 - +14:00
05 DST	On, Off
06 DST Start Date	1/1 - 12/31
07 DST Start Time	0:00 - 23:00
08 DST End Date	1/1 - 12/31
09 DST End Time	0:00 - 23:00
10 Infrared Setting	
01 IRDU No toDetect	0 - 200
02 Limit NOM	On, Off
03 IRDU Band	
01 Band A	Enabled, Disabled
02 Band B	Enabled, Disabled
03 Band C	Enabled, Disabled
04 Band D	Enabled, Disabled
05 Band E	Enabled, Disabled
06 Band F	Enabled, Disabled
07 Band G	Enabled, Disabled
08 Band H	Enabled, Disabled
09 Band I	Enabled, Disabled
10 Band J	Enabled, Disabled
11 Login Password	
01 Admin.Pwd.Login	On, Off
02 Admin.Password	Displays password
03 Opr.Pwd.Login	On, Off
04 Opr.Password	Displays password
12 Reset All Dflt.	

[2] System Info	Displays current settings
01 Device Name	
02 Serial Number	
03 ATUC-IR CUFW Ver	
04 ATUC-IR IRFW Ver	
05 IP Config Mode	
06 IP Address	
07 Subnet Mask	
08 Gateway Address	
09 Mac Address	
10 Dante	
01 Device Name	
02 Firmware Ver.	
03 Config Mode	
04 Connect Status-P	
05 IP Mode-P	
06 IP Address-P	
07 Subnet Mask-P	
08 Gateway Adrs-P	
09 Mac Address-P	
10 Connect Status-S	
11 IP Mode-S	
12 IP Address-S	
13 Subnet Mask-S	
14 Gateway Adrs-S	
15 Mac Address-S	
16 Latency	
11 Allow Discovery	
12 IP Ctrl Port No	
13 IP Ctrl Ntfy	
14 Audio Level Ntfy	
15 M-cast Adrs	
16 M-cast Port No	
17 NTP	
18 NTP Adrs	
19 NTP Port	
20 Time Zone	
21 CU Link Status	
22 No.ofExtensionCU	

23 Total No.of IRDU	
24 Total No.of DU	
25 Total No.of IU	
26 Total No.of INT	
[3] Audio Setting	
01 MIC/LINE Input 1	
01 Input Type	Mic, Line +4dBu, Line 0dBV, Dante
02 Input Gain	–24dB - +20dB
03 Level	–∞, –120 - +10dB
04 Phantom Power	On, Off
05 Mix to Floor	On, Off
01 MIC/LINE Input 1	
01 Input Type	Mic, Line +4dBu, Line 0dBV, Dante
02 Input Gain	–24dB - +20dB
03 Level	–∞, –120 - +10dB
04 Phantom Power	On, Off
05 Mix to Floor	On, Off
03 AUX Input	
01 Input Type	Analog, Dante
02 Level	–∞, –120 - +10dB
03 Mix to Floor	On, Off
04 DU SP Output Lvl	0 - 20
05 DU Floor Lock	On, Off
06 VoiceDetectSens	-5, -4, -3, -2, -1, 0, 1, 2, 3, 4, 5
07 Auto to Mic2 In	On, Off
[4] Recorder Setting	
01 Rec Format	WAV, MP3
02 RecordingQuality	64, 128, 192, 256, 320kbps
03 No.of Rec CH	1 - 4 (WAV), 1 - 2 (MP3)
04 Rec Source CH1	Floor, Group 0, Group 1, Group 2, Group 3, Language 1, Language 2, Language 3, Remote Lang. 1, Remote Lang. 2, Mic/Line 1, Mic/Line 2, Mic/Line 1&2 Mix
05 Rec Source CH2	Floor, Group 0, Group 1, Group 2, Group 3, Language 1, Language 2, Language 3, Remote Lang. 1, Remote Lang. 2, Mic/Line 1, Mic/Line 2, Mic/Line 1&2 Mix
06 Rec Source CH3	Floor, Group 0, Group 1, Group 2, Group 3, Language 1, Language 2, Language 3, Remote Lang. 1, Remote Lang. 2, Mic/Line 1, Mic/Line 2, Mic/Line 1&2 Mix
07 Rec Source CH4	Floor, Group 0, Group 1, Group 2, Group 3, Language 1, Language 2, Language 3, Remote Lang. 1, Remote Lang. 2, Mic/Line 1, Mic/Line 2, Mic/Line 1&2 Mix
08 Auto Track	Off, 15, 30 min, 1, 2 hour
09 Filename Prefix	Displays filename prefix
[5] Conference Mode	
01 Conference Mode	Free Talk, Request Talk, Full Remote
02 NOM	1 - 10
03 Auto mic Off	5 - 60sec, Off
04 Override Mode	No Override, FIFO, LIFO (depending on Conference Mode)
05 Max Queue	0 - 150
06 MicON Trigger	All Button Toggle, All Voice, All Push-to-Talk
07 MicON Hold Time	1.0 - 10.0 seconds
08 Interrupt Option	Cut, Mute
[6] Logging	
01 Logging	On, Off
02 Destination	Internal, USB
[7] Presets	
01 Recall Presets	Recalls presets
02 Save Presets	Saves presets
03 Import Presets	Imports presets
04 Export Presets	Exports presets
05 Boot Up Preset	Calls presets at boot up

Entering letters

Entering text is the same operation as for the 50CU. Refer to “Entering letters” (›page 31)

IR System Connections and Configuration

Connecting devices

NOTICE
- Do not plug in the supplied AC power cord until all other connections have been completed.
- When connecting devices, plug the connectors securely all the way in. Loose connections may cause malfunctions or noise.
- Check the plug orientations.
- Refer also to the instruction manuals supplied with the external devices.

Entire system connection diagram

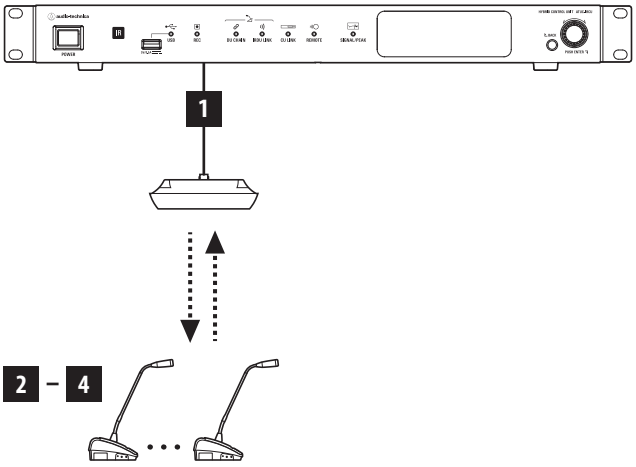

1 Connecting IRA and IRCU

1 Install the IRCU and IRA.

NOTICE
- Install the IRCU on a flat surface. Dropping a unit may cause damage to the unit and/or personal injury.
- When installing the IRCU in a rack, read the precautions in advance (› page 5).
- Refer to the Instruction Manual - Installation Edition to install the IRA.

2 Use BNC cable to connect the IRCU and IRA.

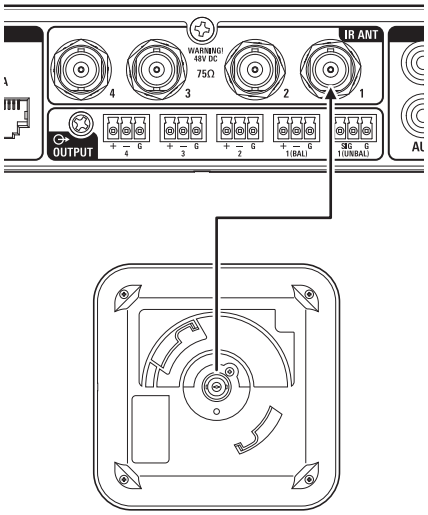

2 Connecting the microphone ATUC-M to the IRDU

1 Connect the ATUC-M to the microphone jack on the IRDU.

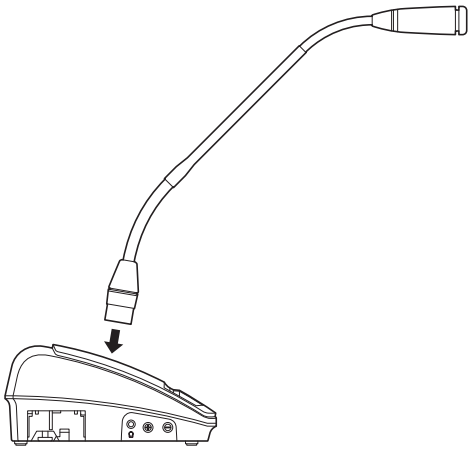

NOTICE
- Insert it until you hear a click.
- Do not lift the IRDU by holding the ATUC-M. Be sure to hold the main body of the IRDU when holding it.
- Slowly bend or extend the flexible part of the ATUC-M. Do not apply excessive force to the ATUC-M when bending it.
- When disconnecting the ATUC-M from the IRDU, securely hold the connector while pressing down the microphone release button and then remove the ATUC-M.
- Before connecting/disconnecting the ATUC-M, be sure to turn off the power. If you do not turn off the power, a malfunction may occur.
- If the ring LED on the ATUC-M does not go from on to off, then restart the IRDU.

3 Starting the IRDU

1 Insert the rechargeable batteries into the IRDU.

Insert the rechargeable batteries into the bottom of the IRDU. Then, just slide the rechargeable batteries in the direction of the arrow to secure them. There is a click sound so you can confirm that the batteries are securely mounted.

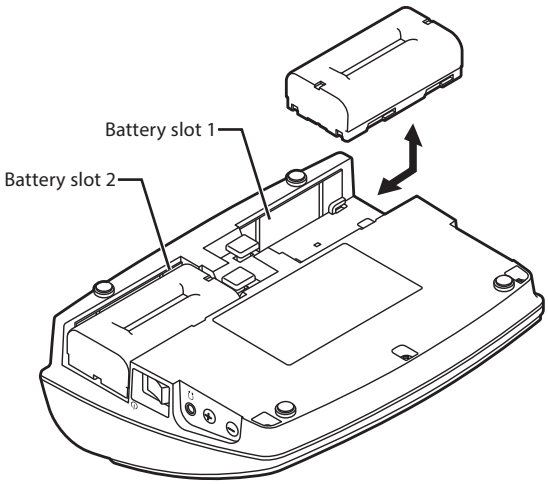

If you are using an AC adapter (sold separately):
Attach the rechargeable battery covers to the IRDU.

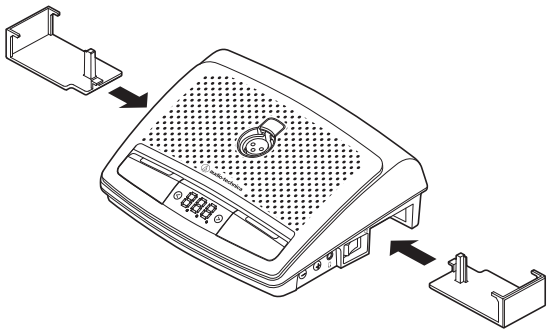

NOTICE
- Extend the cord of the AC adapter through the hole for the cord.
- Do not pinch the cord when you attach the rechargeable battery covers. Doing so may cause the cord to break.

When removing the rechargeable batteries:
While pressing the rechargeable battery/rechargeable battery cover release button, slide the rechargeable battery in the direction of the arrow.

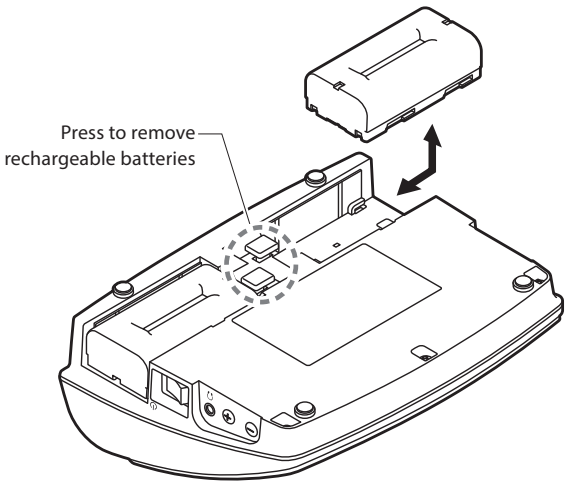

NOTICE
- You can install two rechargeable batteries, but one is enough to operate. If you install both rechargeable batteries, power is consumed from the rechargeable battery in battery slot 1 first, and when that power is gone, the power supply changes to the rechargeable battery in battery slot 2.
- The IRDUs do not have a recharging function. To recharge them, use Audio-Technica's specialized charger (ATCS-B60).

4 Setting Device ID for IRDU

You need to set individual IDs for each IRDU before you can use them.
They cannot be used correctly if you do not set the ID numbers.
There are two setting methods. “Auto Setting” automatically assigns an ID in the order the IRDUs are connected to the IRCU. With “Manual Setting”, you set the ID on the IRDU itself.

- This setting is done only one time and the ID numbers are recorded in memory.
- You can use 200 ID numbers, from 001 to 200, but no other numbers can be set. (All the numbers are set to 001 at the factory.)

Auto setting:

① **While pressing the “BACK” button, turn on the IRCU to enter the device ID setting mode.**

② **When “audio-technica ATUC-IR” appears in the OLED, release the “BACK” button.**

③ **Wait until the OLED display changes to “ATUC-IRDU Device ID Auto Assign Mode...”, then, while pressing the “<”/”>” monitor channel selection buttons, turn on each IRDU one at a time in order.**

④ **The IDs are automatically assigned in the order in which you turn the IRDUs on. After you have confirmed the ID, press the right multifunction button to set the ID.**
You can also set any ID you want by doing the same operation as “Manual Setting”.

⑤ **After setting all the IDs, restart the IRCU.**

NOTICE • For any DUs that were not assigned an ID, such as due to poor infrared transmissions, turn off their power, and then, while pressing on the "<"/">" monitor channel selection buttons, turn on the power and perform "Auto Setting" or "Manual Setting" to specify the ID.

Manual settings:

① **While pressing the "<"/">" monitor channel selection buttons, press the power switch.**

② **Look at the display to input the ID number you want.**

<Example: To set ID number "152">

1 While pressing the "<"/">" monitor channel selection buttons, press the power switch.
2 Press the "<"/">" buttons so the 2 appears as the first digit.
3 Press the left multifunction button to set the second digit.
4 Press the "<"/">" buttons so the 5 appears as the second digit.
5 Press the left multifunction button to set the third digit.
6 Press the "<"/">" buttons so the 1 appears as the third digit.
7 Press the right multifunction button to apply the setting.
(After step 7, you can use the system in regular modes.)

Additional procedures closely follow the procedures for the ATUC-50 system. Refer to "4 Connecting an amplifier" (›page 48) in "Wired System Connections and Configuration".

5 Set up the IRDU so it can be used

When turning on the power to all IRDU being used, and then starting up the IRCU:

IRCU startup process finishes and it can be used when the ring LED on the ATUC-M connected to the IRDU stops flashing.
Alternatively, if the Talk Mode is set to All Button Toggle or Push to Talk, then the Talk LED for the right multifunction button lights.

When starting up the IRCU, and then turning on the power to the IRDU:

The ring LED on the ATUC-M flashes when the IRDU startup process ends. Press the right multifunction button to turn off the ring LED and the IRDU can be used. If the Talk Mode is set to Voice, then the Talk LED does not turn on.

ATUC-50/IR Hybrid System

The ATUC-50 wired conference system and the ATUC-IR infrared conference systems can be combined, and operated as a hybrid conference system. Refer to both the wired conference system and infrared conference system sections in this manual to operate a hybrid conference system.

Example of hybrid system connections

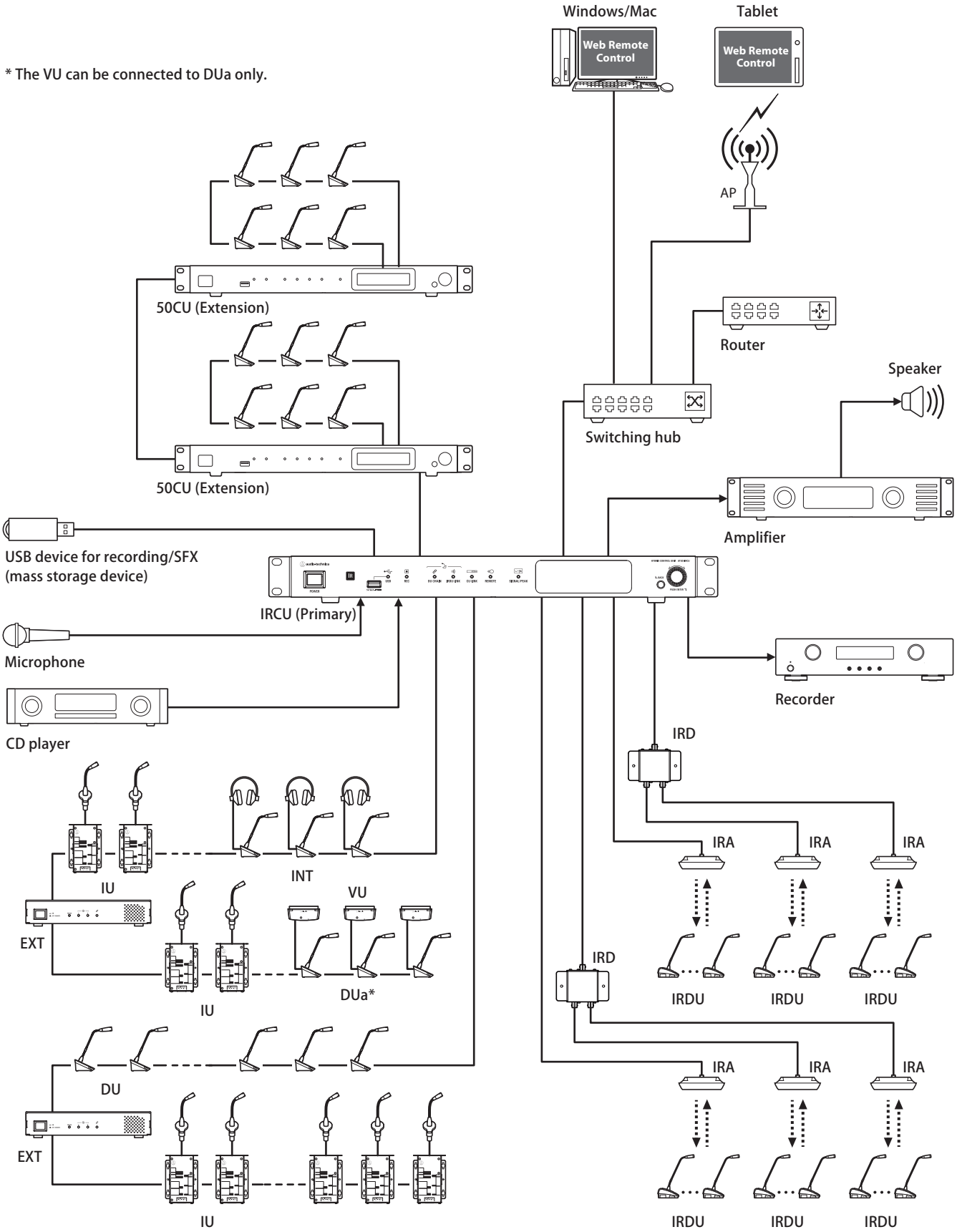

Hybrid System Connections and Configuration

About Wired System and IR System Connections and Configuration

Refer to both the wired conference system and infrared conference system sections in this manual regarding connections and configurations to operate a hybrid conference system.

"Wired System Connections and Configuration" (›page 34)
"IR System Connections and Configuration" (›page 67)

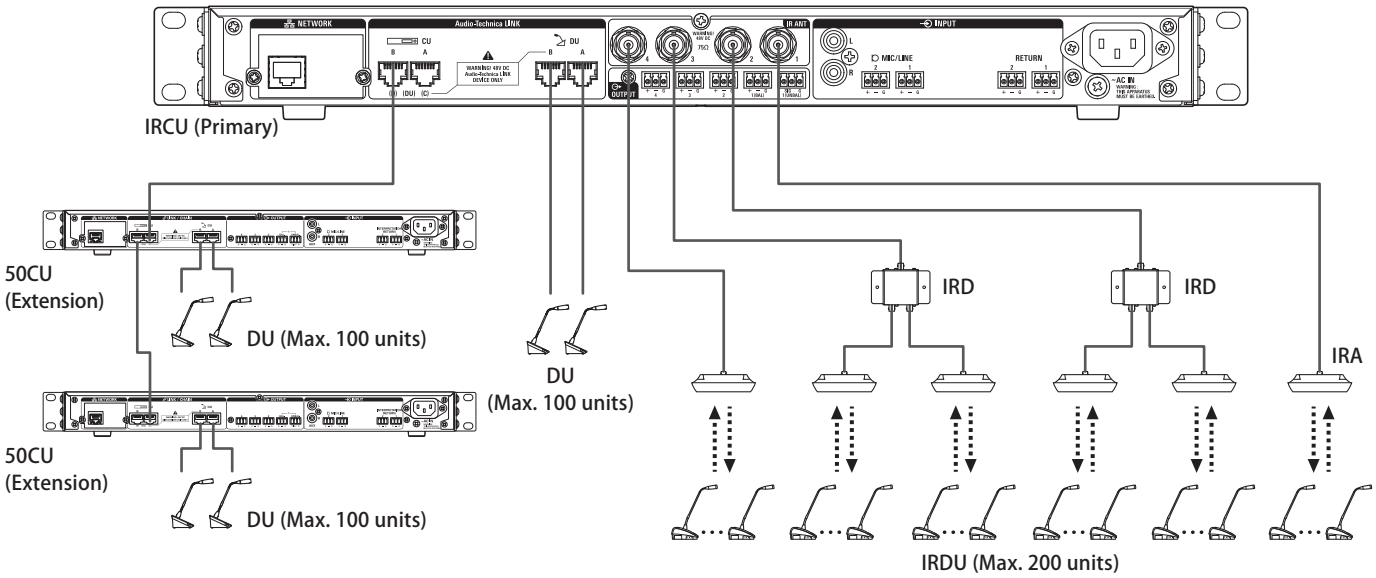

Maximum number of connections for each terminal/each CU in Standalone mode

	Maximum number of terminal connections in a DU CHAIN					Maximum number of IR connections	System total
	A	B	C	D	Total		
Daisy-chain connection	50	50	50	50	100	200	300
Ring connection	50		50		100		300

- The maximum number of units that can be connected to each terminal on the DU CHAIN by using the EXT is 100 units.
- IUs consume more power than 50DUs, so the number of units shown in the table cannot be connected without the use of the appropriate number of EXTs. If you connect that many without the use of the appropriate number of EXTs, it may damage the CUs or the EXTs. Refer to the table "Relationship of the LAN cable length, number of units connected and number of EXTs required" (›page 37, 44) regarding the number of IUs that can be connected.

Maximum number of connections for each terminal/each CU when using 3 CU links

	IRCU Primary				50CU Extension max. 2 units				System total
	Maximum number of terminal connections in a DU CHAIN			Maximum number of IR connections	Maximum number of terminal connections in a DU CHAIN				
	A	B	Total		A	B	Total	50CU x 2 Total	
Daisy-chain connection	50	50	100	200	50	50	100	200	500
Ring connection	50		50		50		50	100	350

NOTICE • Up to 6 INTs can be connected to the primary.

About CU link connections:

IRCU/IRCUDAN as primary and up to 2 50CUs as extension can be cascaded (use the CU LINK A/B terminals for connections as shown below).
Since up to 100 50DU/INTs can be connected to each CU, if you use 3 CUs, up to 300 50DU/INTs can be connected in total.

Follow the procedure below to cascade CUs.
① Connect the CU LINK A terminal on the 1st extension CU to the CU LINK B terminal on the primary CU.
② When cascading 2 extension CUs, connect the CU LINK A terminal on the 2nd extension CU to the CU LINK B terminal on the 1st extension CU.

IRCU/IRCUDAN primary

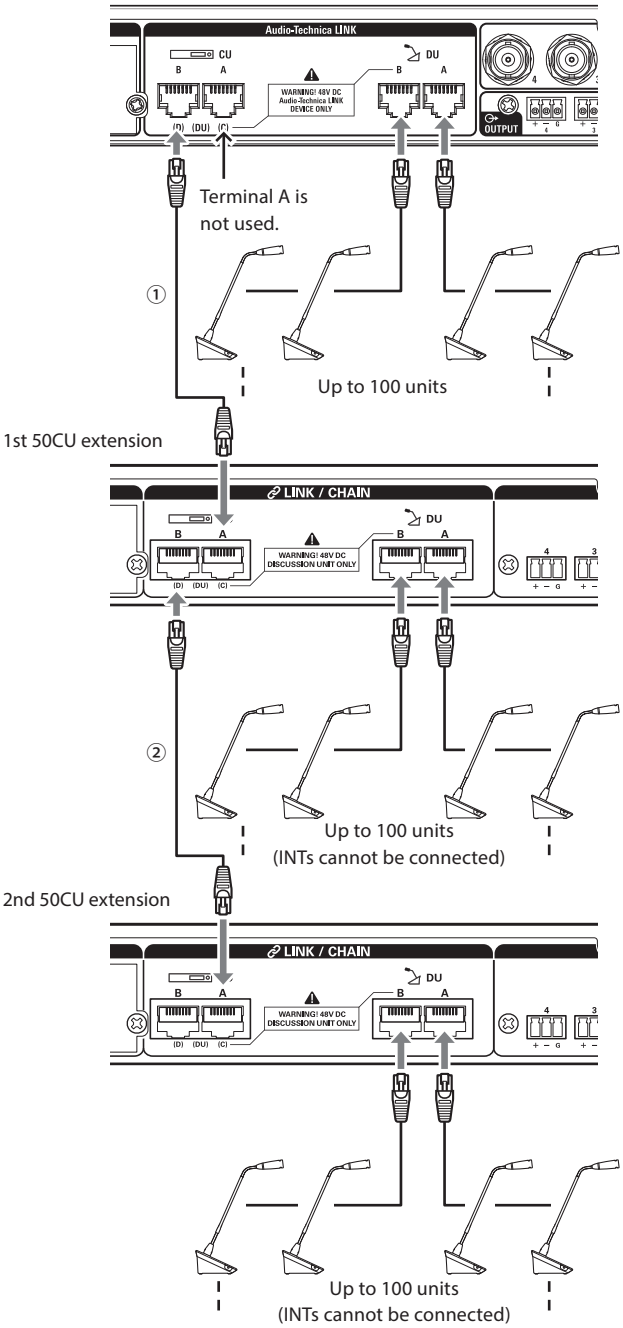

Primary/Extension (*CU Link Mode*):

	1st extension	2nd extension
2 CU LINK	Extension last unit	-
3 CU LINK	Extension pass-through	Extension last unit

NOTICE
- Settings on the IRCU/IRCUDAN that is the primary are not needed.

- You can either daisy-chain (›page 35) or ring (›page 35) 50DU/INTs to each CU.

NOTICE
- Up to 6 INTs can be connected to the primary CU. They cannot be connected to extension CUs.
- If you are using CU LINK connections, do not use the Boot Up Preset function (›page 66) because it will not operate correctly.

Information

Troubleshooting

If a problem should arise, first check the following:

1. **Check your connections.**
2. **Verify that the system is being operated as described in this instruction manual.**
3. **Check that the external devices are operating properly. Check the operation while the devices are not connected to the CU.**
4. **Restart your network devices.**

If any unit in the system is not operating properly, check the items listed in the table below.
If the symptom is not covered on the checklist below, contact your local Audio-Technica dealer.

When you contact us, you may be asked the firmware version. Please check the firmware version by following the procedure below.

To check from Web Remote:
[Settings & Maintenance] → [System Settings] → [Utilities]
or
[Settings & Maintenance] → [System Info]

To check on the CU display:
Set → Log in as *Administrator* or *Operator* → *System Info*

ATUC-50CU/ATUC-IRCU/ATUC-IRCUDAN

Symptom	Cause/Solution	Page
Cannot turn on the power.	Check that the AC power cord is connected properly.	page 48
The connected microphone does not work.	Check the connection of the microphone.	page 12
	Check and adjust the MIC/LINE 1/2 settings. **To check from Web Remote:** [Settings & Maintenance] → [Install Settings] → [CU Audio] → [Input Settings] **To check on the CU display:** *Set* → Log in as *Administrator* or *Operator* → *Audio Setting*	page 11
The sound from the connected speaker is distorted or cannot be heard.	Check the connections of all devices.	page 12
	Plug the connection cables all the way in.	-
	Check that the inputs and outputs of all devices are connected properly.	page 12
	Check that terminal pin assignments (Hot/Cold/GND, etc.) are correct.	page 12
	Check that the cables are not damaged.	-
	Check and adjust the setting of the connected amplifier.	-
Cannot record sound.	Check the remaining memory on the USB device (mass storage device).	-
	Reconnect the USB device (mass storage device) or try with a different USB device (mass storage device).	-
Although recording has performed properly, when playing the recorded files using a device such as a computer, no sound is heard.	Check that the recording channel set from [Rec source] is correct. **To check from Web Remote:** [Settings & Maintenance] → [Install Settings] → [Recorder] → [USB Recorder Settings] **To check on the CU display:** *Set* → Log in as *Administrator* or *Operator* → *Recorder Setting*	page 11

Symptom	Cause/Solution	Page
You forget the password.	Follow the procedure below to reset the password. ① Display the HOME screen of the CU display and then while pressing the BACK button on the CU front panel, rotate the jog dial clockwise until it clicks 3 times. ② While pressing the BACK button, rotate the jog dial counterclockwise until it clicks 3 times. ③ While pressing the BACK button, press the ENTER button.	page 10
The system cannot start up normally.	The symptom may be improved by adjusting the wait time for completing startup. Follow the procedure below to check the wait-time setting. **To check from Web Remote:** [Settings & Maintenance] → [System Settings] → [General] → [Boot Settings] → [Start-up Delay]	-

ATUC-IRCUDAN

Symptom	Cause/Solution	Page
Cannot get recognition from Dante controller.	Check the connections of the LAN cables.	page 62
	Check the Dante network settings. **To check from Web Remote:** [Settings & Maintenance] → [System Settings] → [Network/Dante]	page 65
Dante audio is not being input.	Check whether the audio routing on Dante controller is correct.	-
	Check whether the input audio settings on Web Remote are correct. "DANTE" must be selected as the type for input settings in [Settings & Maintenance] → [Install Settings] → [CU Audio] → [Input Settings] screen.	page 66
Dante audio is not being output.	Check whether the audio routing on Dante controller is correct.	-

ATUC-50DU/DUa/INT

Symptom	Cause/Solution	Page
Cannot turn on the power.	Check the connection to the CU or other DUs/INTs.	pages 34, 35
The (talk) button does not function.	Depending on the conference mode or setting, the (talk) button may not function. Check the conference mode settings. **To check from Web Remote:** [Settings & Maintenance] → [Install Settings] → [Conference] → [Conference Mode] **To check on the CU display:** *Set* → Log in as *Administrator* or *Operator* → *Conference Mode*	page 11
	The settings of the interpretation unit(s) may cause speech to be output incorrectly, even if the talk button is pressed to speak. Check the settings of the interpretation unit(s). **To check from Web Remote:** [Settings & Maintenance] → [Install Settings] → [Interpretation] → [Interpretation Settings] → [Interpretation Mode] and [Settings & Maintenance] → [Install Settings] → [Interpretation] → [INT Unit Settings] → [Interpretation Languages]	-

Symptom	Cause/Solution	Page
No sound is output from the headphone jack.	Insert the headphone plug all the way in.	-
	Raise the volume with the **+** button.	pages 13, 14
	Use the monitor channel selection button(s) of the DU/INT to confirm that you can monitor speech from the channel you want.	pages 13, 14
No sound is output from the built-in speaker.	Check the connection of the DUs.	page 35
	Plug the Ethernet cable all the way in.	-
	Check that the cables are not damaged.	-
	From [Settings & Maintenance] → [Install Settings] → [DU/IU] → [DU/IU Detail Settings], check that the [Speaker] setting is set to [Enabled].	-
	Adjust the speaker level. **To check from Web Remote:** [Settings & Maintenance] → [Install Settings] → [DU/IU] → [Global DU/IU Settings] → [Speaker Level] **To check on the CU display:** *Set* → Log in as *Administrator* or *Operator* → *Audio Setting* → *DU SP Output Lvl*	page 11
	Speech is not output from the built-in speaker of the INTs.	-
The ATUC-M does not operate.	Insert the ATUC-M connector into the microphone jack on the DU/INT until a clicking sound is heard.	page 48
	For DUs: From [Settings & Maintenance] → [Install Settings] → [DU/IU] → [DU/IU Detail Settings], check the setting of [Microphone]. **For the INTs:** From [Settings & Maintenance] → [Install Settings] → [Interpretation] → [INT Unit Settings] → [INT Unit Detail Settings] check the setting of [Microphone]. • Check that [Phantom Power] is not set to [Off]. • Check that [Input Gain] is not too low.	-
If you read the preset, the settings changed from the last settings.	Check that the preset data is correct.	-
	Check that the number and topology of the DUs/INTs have not changed since the last time.	-

ATUC-50IU

Symptom	Cause/Solution	Page
Cannot turn on the power.	Check the connection to the CU or other DUs/INTs.	pages 34, 35

ATLK-EXT165

Symptom	Cause/Solution	Page
Cannot turn on the power.	Check that the AC power cord is connected properly.	page 48

ATLK-EXT25

Symptom	Cause/Solution	Page
Cannot turn on the power.	Check the connection of the AC adapter (sold separately by Audio-Technica).	page 25
	Check the connection of the PoE/PoE+ IN terminals.	
	Check that the number of connected DUs does not exceed the maximum connected units.	page 34
The connected DU does not function.	Check the method used to connect the DUs.	page 25
	If connected to the Audio-Technica LINK A terminal, check the settings of the jumper switch pins.	page 26
	Check the mode switch settings.	page 27

ATUC-IRDU

Symptom	Cause/Solution	Page
Cannot turn on the power.	Check the installation of the rechargeable batteries.	page 68
	Check the remaining charge in the rechargeable batteries.	page 61
Initialization operation does not end (LEDs continue flashing).	Check the installation locations of the IRDUs and IRAs.	-
	There may be a limit on the number of IRDUs that are detected at system start. Check the infrared setting again. [Settings & Maintenance] → [System Settings] → [Infrared] If this is the case, connection is possible by operating any button on the IRDU.	page 65
The (talk) button does not function.	Depending on the conference mode or settings, the (talk) button may not function. Check the conference mode settings. **To check from Web Remote:** [Settings & Maintenance] → [Install Settings] → [Conference] → [Conference Mode] **To check on the CU display:** *Set* → Log in as *Administrator* or *Operator* → *Conference Mode*	page 11
The sound from the connected microphone is distorted or cannot be heard.	Check the installation locations of the IRDUs and IRAs.	-
	Check the ID settings of the device.	page 68
	There may be interference with the infrared. The problem may be solved by the settings for the infrared frequency that you are using. [Settings & Maintenance] → [System Settings] → [Infrared] → [IRDU Band]	page 65
No sound is output from the headphone jack.	Insert the headphone plug securely all the way in.	page 56
	Raise the volume with the + button on the IRDU.	page 56
	Use the monitor channel selection button(s) to confirm that you can monitor speech from the channel you want.	page 56
No sound is output from the built-in speaker.	From [Settings & Maintenance] → [Install Settings] → [DU/IU] → [DU/IU Detail Settings], check that the [Speaker] setting is set to [Enabled].	page 35
	Adjust the speaker level. **To check from Web Remote:** [Settings & Maintenance] → [Install Settings] → [DU/IU] → [Global DU/IU Settings] → [Speaker Level] **To check on the CU display:** *Set* → Log in as *Administrator* or *Operator* → *Audio Setting* → *DU SP Output Lvl*	page 11

ATUC-IRA

Symptom	Cause/Solution	Page
Cannot turn on the power to ATUC-IRA.	Check the connections of the cables.	page 67
	Check that the cables are not damaged.	

Error messages

- Error messages displayed on the Web Remote screen and CU displays are as follows.
- The states of the CU LED error indicators are described together with the CU display error messages.
- If the same error persists even after the following remedies are taken, or when the unit(s) requires repair or parts replacement, contact your local Audio-Technica dealer.

	Web Remote	CU display (LED indicators)	State/remedies
1	Resume Data Error	Resume Data Err	Failed to read the resume information. • The unit was started up using the second from the last setting or default setting. Although there is no functional limitation, be sure to restart the unit to check that the same error does not occur again.
2	Preset Data Error	Pst Data Err	Failed to read the preset data. • This error may occur when you recall the default preset or the preset which you successfully recalled last time. Although there is no functional limitation, be sure to restart the unit to check that the same error does not occur again.
3	DU Power Error	DU Power Err (DU CHAIN: blinks green)	An error occurred when power was supplied to the DU. • Voltage may fall at the 48V output. ①After disconnecting all DUs from the CU, restart the CU. If the same error occurs again, the CU requires repair. ②If the same error does not occur again in ① but the error occurs again after connecting the DUs, there may be a damaged cable or DU. Identify the damaged cable or DU for replacement or repair.
4	DU Communication Error	DU Comm Err (DU CHAIN: blinks green)	DU individual settings cannot be configured. • Check that there is no DU connection error.
5	DU Ring to Daisy	DU Ring to Daisy (DU CHAIN: blinks green)	The DU topology has been changed (from ring to daisy). • If this error occurs even though you did not change the DU connection, check that there is no DU connection error.
6	DU Daisy to Ring	DU Daisy to Ring (DU CHAIN: blinks green)	The DU topology has been changed (from daisy to ring). • If this error occurs even though you did not change the DU connection, check that there is no DU connection error.
7	Number of DU Decreased	DU Number Decrease (DU CHAIN: blinks green)	The number of connected DUs decreased. • If this error occurs even though you did not change the DU connection, check that there is no DU connection error.
8	DU Exceeds 100 Units	DU Exceeds 100pcs (DU CHAIN: blinks green)	More than 100 DUs are connected to the DU CHAIN A/B/C/D terminals in total. • Connect 100 DUs or less to each CU.
9	INT Unit Exceeds 6 Units	INT Exceeds 6pcs (DU CHAIN: blinks green)	More than 6 INTs are connected to the DU CHAIN A/B/C/D terminals in total. • Connect 6 INTs or less to CU.
10	DU A/B: Exceeds 50 Units	DU A/B Exceeds 50pcs (DU CHAIN: blinks green)	More than 50 DUs are connected to the DU CHAIN A/B terminals in total. • Connect 50 DUs or less to the DU CHAIN A/B terminals in total.
11	DU C/D: Exceeds 50 Units	DU C/D Exceeds 50pcs (DU CHAIN: blinks green)	More than 50 DUs are connected to the DU CHAIN C/D terminals in total. • Connect 50 DUs or less to the DU CHAIN C/D terminals in total.
12	CU Communication Error	CU Comm Err (CU LINK: blinks green)	A communication error occurred between the CUs. • Check that there is no CU connection error.
13	CU Link OFF	CU Link OFF (CU LINK: blinks green)	CU Link is cancelled. • If this error occurs unexpectedly, check that there is no CU connection error.
14	Network Communication Error	Network Comm Err (REMOTE: blinks green)	(1) A network communication error occurred. (2) An IP command communication error occurred. • Check that there is no network connection error.
15	USB Access Error	USB Access Err	An error occurred when accessing the USB device (mass storage device). • Check that the USB device (mass storage device) has no problems. • Check that the same error does not occur with another USB device (mass storage device).

	Web Remote	CU display (LED indicators)	State/remedies
16	USB Format Error	USB Format Err	There is a problem with the USB device (mass storage device). • Check the format of the USB device (mass storage device). • Use a USB device (mass storage device) formatted with FAT16 or FAT32.
17	Failed	Failed	(1) The setting cannot be configured due to some system errors. • Try to configure the setting again and check whether the same error occurs again. (2) Playback operation cannot be performed. • Check that the USB device (mass storage device) is connected properly. • Check that the file you want to play is in the USB device (mass storage device). • Check that the format of the file you want to play is correct. (You can check by, for example, playing the file with another playback device.) (3) Recording operation cannot be performed. • Check that the USB device (mass storage device) is inserted in the CU. • Check that write protection is disabled on the USB device (mass storage device). • Check the space available on the USB device (mass storage device). • Check that the USB device (mass storage device) has no problems. • Check that the same error does not occur with another USB device (mass storage device).
18	File Export Failed		(4) The preset data cannot be exported. • Check that the USB device (mass storage device) has no problems. • Check that the same error does not occur with another USB device (mass storage device).
19	File Import Failed		(5) The preset data cannot be imported. • Check that the USB device (mass storage device) has no problems. • Check that the same error does not occur with another USB device (mass storage device).
20	USB Write Error	USB Write Err	The data log cannot be saved onto the USB device (mass storage device). • Check that the USB device (mass storage device) is inserted to the CU. • Check that write protection is disabled on the USB device (mass storage device). • Check the space available on the USB device (mass storage device). • Check that the USB device (mass storage device) has no problems. • Check that the same error does not occur with another USB device (mass storage device).
21	Failed. Please turn power OFF.	CU FW Update Err Please Turn Pwr OFF	An error occurred during the CU firmware update. • Turn off the power and restart the CU.
22	Failed. Please turn power OFF.	IRCU FW Update Err Please Turn Pwr OFF	An error occurred during the IRCU firmware update. • Turn off the power and restart the system.
23	Failed. Please turn power OFF.	DU FW Update Err Please Turn Pwr OFF	An error occurred during the DU firmware update. • Turn off the power and restart the CU. (When the update cannot be performed for the 1st DU, or an error occurs during the update process and the update cannot be continued.)
24	Failed. Please turn power OFF.	DUa FW Update Err Please Turn Pwr OFF	An error occurred during the DUa firmware update. • Turn off the power and restart the CU. (When the update cannot be performed for the 1st DUa, or an error occurs during the update process and the update cannot be continued.)
25	Failed. Please turn power OFF.	INT FW Update Err Please Turn Pwr OFF	An error occurred during the INT unit firmware update. • Turn off the power and restart the CU. (When the update cannot be performed for the 1st INT, or an error occurs during the update process and the update cannot be continued.)
26	Failed. Please turn power OFF.	IU FW Update Err Please Turn Pwr OFF	An error occurred during the IU firmware update. • Turn off the power and restart the CU. (When the update cannot be performed for the 1st IU, or an error occurs during the update process and the update cannot be continued.)

	Web Remote	CU display (LED indicators)	State/remedies
27	Completed except serial numbers below. Please turn power OFF. XXXXXXXX XXXXXXXX (Displays a list of 8-digit serial numbers of DUs for which the update cannot be performed.)	Part of DU Failed Please Turn Pwr OFF	The DU firmware update has been completed but the update cannot be performed for some DUs. ①The serial numbers of DUs for which the update cannot be performed will be listed on the pop-up screen. Write them down. ②Turn off the power. ③Disconnect the DUs with the serial numbers you wrote down. ④Perform forced update for the DUs you disconnected in step ③. For details on how to perform the forced update, contact your local Audio-Technica dealer.
28	Completed except serial numbers below. Please turn power OFF. XXXXXXXX XXXXXXXX (Displays a list of 8-digit serial numbers of DUas for which the update cannot be performed.)	Part of DUa Failed Please Turn Pwr OFF	The DUa firmware update has been completed but the update cannot be performed for some DUas. ①The serial numbers of DUas for which the update cannot be performed will be listed on the pop-up screen. Write them down. ②Turn off the power. ③Disconnect the DUas with the serial numbers you wrote down. ④Perform forced update for the DUas you disconnected in step ③. For details on how to perform the forced update, contact your local Audio-Technica dealer.
29	Completed except serial numbers below. Please turn power OFF. XXXXXXXX XXXXXXXX (Displays a list of 8-digit serial numbers of INTs for which the update cannot be performed.)	Part of INT Failed Please Turn Pwr OFF	The INT unit firmware update has been completed but the update cannot be performed for some INTs. ①The serial numbers of INTs for which the update cannot be performed will be listed on the pop-up screen. Write them down. ②Turn off the power. ③Disconnect the INTs with the serial numbers you wrote down. ④Perform forced update for the INTs you disconnected in step ③. For details on how to perform the forced update, contact your local Audio-Technica dealer.
30	Completed except serial numbers below. Please turn power OFF. XXXXXXXX XXXXXXXX (Displays a list of 8-digit serial numbers of IUs for which the update cannot be performed.)	Part of IU Failed Please Turn Pwr OFF	The IU firmware update has been completed but the update cannot be performed for some IUs. ①The serial numbers of IUs for which the update cannot be performed will be listed on the pop-up screen. Write them down. ②Turn off the power. ③Disconnect the IUs with the serial numbers you wrote down. ④Perform forced update for the IUs you disconnected in step ③. For details on how to perform the forced update, contact your local Audio-Technica dealer.
31	Data acquisition error.	Data Acquisition Err	Failed to acquire data through operation via Web Remote or the CU display. • Perform the operation again and check whether the same error occurs.
32	Unable to Set	Unable to Set Can't.ReducePriority	(1) Unusable characters are contained in the string of letters you have entered. • Delete unusable characters. (2) The change cannot be applied because the entered values are out of the permitted range or the change is not allowed. • Enter values within the permitted range. • Check that the unit is in a state where changes are allowed and then perform the operation again and check whether the same error occurs. (3) The setting of [Number of Open Mics] (*NOM*) cannot be changed due to the current number of priority DUs. • Set a different number for [Number of Open Mics] (*NOM*) or change the number of priority DUs. (4) Since recording, recording pause, or file reading process is under way, any recording-related settings cannot be configured. • Stop recording and then perform the operation again. (5) You must turn off the microphones for all of the DUs in order to change the settings. • Selecting [Yes] forces the microphones for all of the DUs off and changes the settings.
33	All DUs will be turned off to apply the changes. Do you wish to proceed?	Turn OFF All DU?	

	Web Remote	CU display (LED indicators)	State/remedies
34	Unable to control.	Unable to Ctrl	(1) Since recording, recording pause, or file reading process is under way, the operation cannot be performed. (2) Due to other reasons, the operation cannot be performed. (Operations except changing settings cannot be performed.) • Stop recording and then perform the operation again.
35	Number of IRDU exceeds available IR Bands	Pst Recall Err	The preset file cannot be read. The number in [Number of Open Mics] exceeds the number of [IRDU Band] that are enabled. • Set [Limit NOM to Enabled IR Bands] in [Infrared Settings] to [Off].
36	Dante Communication Error	Dante Comm Err	A communication error occurred with the Dante board. • Turn off the power and restart the system. Confirm that the same error does not occur when the system is restarted.
37	Number of priority units exceeds maximum. Reduced priority channels.	-	The number of DUs which are set as priority DUs exceeded the limit due to CU Link. Decrease the number of priority DUs. (Deactivate the priority setting for some DUs.) • Check the priority DUs and change the setting as necessary.
38	Unable to set. Number of priority channels exceeds maximum.	-	The maximum number of DUs that can be designated as priority DU is 1 unit less than the specified value for [Number of Open Mics] (*NOM*). No more DUs can be designated as a priority DU. • Change the setting value for the NOM or DU priority setting.
39	Recording Failed	-	A recording function error occurs such as a recording error not due to recording operations via Web Remote. • Check that no error occurs during recording on the CU. If an error occurs, solve the problem according to the error.
40	Device ID XXX , Battery 1 Low	-	There is low remaining power in battery 1 in the IRDU with device ID XXX. • Replace battery 1.
41	Device ID XXX , Battery 1 Depleted	-	There is no remaining power in battery 1 in the IRDU with device ID XXX. • Replace battery 1.
42	Device ID XXX , Battery 2 Low	-	There is low remaining power in battery 2 in the IRDU with device ID XXX. • Replace battery 2.
43	Device ID XXX , Battery 2 Depleted	-	There is no remaining power in battery 2 in the IRDU with device ID XXX. • Replace battery 2.
44	Device ID XXX, IRDU Not Responding	-	There is no response from IRDU with device ID XXX. • Refer to the installation manual to confirm that the installation environment for the IRDU and IRA is correct, and then redo the previous operation.
45	-	Boot Error XXX	An error occurred while booting the CU. (XXX indicate an error code.) • Restart the CU and check whether the same error occurs. If the same error occurs again, the CU requires repair.
46	-	Chg to FreeTalk Mode	Since a communication error occurred with the control device, the conference mode will be switched to Free Talk Mode where you do not need the control device. • Check that there is no network connection problem.
47	-	Forcible FW Update	Forced update executes for the CU. • Follow the message displayed and do not turn off during the update.
48	-	Connect USB Device with FW Update File	Forced update executes (for the CU or the DU). • Insert a USB control device (mass storage device) where the firmware is stored to the CU.
49	-	Warning 60D	Even though DU topology was not changed, the number of connected units changed. • Failure may have occurred in a DU in the system. If this occurs frequently, promptly contact your local Audio-Technica dealer.

Specifications

ATUC-50CU specifications

General specifications

I/O Connectors	Inputs		Mic/Line×2, AUX (ST)×1, INTERPRETATION RETURN×2
	Outputs		BAL.×4, UNBAL.×1
	LINK/CHAIN		DU A/B terminals, CU A/B terminals (DU C/D terminals)
Recording(*1)	Via USB storage device		1/2/3/4 track (WAV) (BWF standard) 1/2 track (MP3) (Original format)
	MP3 bit rate		64kbps/128kbps/192kbps/256kbps/320kbps
Playback(*1)	WAV	Data length	16bit, 24bit
		Sampling frequency	48kHz
	MP3(*2)	Bit rate	32-320kbps
		Sampling frequency	48kHz
	Maximum file size		2GB
	Maximum number of files		30files
Signal delays			MIC Input to Output: 1ms DU to CU: 1.2ms
Frequency response			+1.0, –2.0dB 20Hz - 20kHz, refer to +4dBu output @1kHz.
Dynamic range			110dB A-Weighted
Signal to noise			89dB A-Weighted
Headroom			20dB
Equivalent input noise	Mic/Line 1-2		Less than –126dBu Rs=150ohm
Residual noise			Less than –86dBu A-Weighted
Total harmonic distortion			Less than 0.03% 1kHz unity
Crosstalk @1kHz			Less than –80dB
OLED display			20 × 2 Character type, Color: Yellow
Phantom power			DC+48V
Power requirement			AC 100V-240V 50/60Hz
Power consumption			20W-175W (max.), Connecting 50 ATUC-50DUs is equivalent to 2.55A.
Operation guaranteed temperature range			0-45℃
Operation guaranteed humidity range			25-85%
External dimensions (including protrusions)			482 mm × 345.1 mm × 49.8 mm (W × D × H)
Net Weight			3.4kg
Finish	Front panel		Black
	Top & Rear		Black
Included Accessories			AC power cord, Euroblock connectors ×9

*1 Supported file systems: FAT16/FAT32

*2 Supported format: MPEG-1 Audio Layer-3.

Input/output specifications

Analog input specifications

Input Terminals		Gain	Load Impedance	Input Level			Connector	Balanced/ Unbalanced
				Minimum	Unity	Maximum		
MIC/LINE Input 1-2	Mic	15-59dB	5k ohm	–60dBu	–40dBu	–16dBu	Euroblock	Balanced
	Line	15-59dB	20k ohm	–40dBu	+4dBu*/ 0dBu	+24dBu*/ +20dBu	Euroblock	Balanced
AUX Input LR (Mono ×2)		-	10k ohm	-	0dBV*/ –10dBV/ –20dBV	+20dBV*/ +10dBV/ 0dBV	RCA Pin	Unbalanced
INTERPRETATION RETURN 1-2		-	20k ohm	-	+4dBu*/ 0dBu	+24dBu*/ +20dBu	Euroblock	Balanced

* Default setting

Analog output specifications

Output Terminals	Load Impedance	Output Level			Connector	Balanced/ Unbalanced
		Minimum	Unity	Maximum		
BAL. (Balanced) Output 1-4	150ohm	-	+4dBu	+24dBu	RCA Pin	Balanced
UNBAL. (Unbalanced) Output 1	300ohm	-	0dBV	+20dBV	Euroblock	Unbalanced

Digital input/output specifications

Terminals	Format	Data length/Sampling Frequency	Audio	Connector
USB	USB	24bit/48kHz	Playback: MP3 or WAV/Record: MP3 or WAV	USB (A type)
DU CHAIN A/B (C/D)	Original format	24bit/48kHz	Floor, Return, Interpretation language, Active Mic	RJ-45
CU LINK A/B	Original format	24bit/48kHz	Floor, Return, Interpretation language, Active Mic	RJ-45

Control I/O specifications

Terminals	Format	Level	Connector
NETWORK	IEEE802.3	10BASE-T/100BASE-TX	RJ-45

ATUC-50DU/DUa/INT specifications

General specifications

I/O connectors	Inputs	Microphone jack×1
	Outputs	Headphone jack×1
	CHAIN	DU/CU connection terminals
Sampling frequency		24bit/48kHz
Frequency response		+1.0, –2.0dB 20Hz - 20kHz, refer to +4dBu output @1kHz.
Dynamic range		104dB A-Weighted
Signal to noise		84dB A-Weighted
Headroom		20dB
Equivalent input noise		Less than –121dBu Rs=150ohm
Total harmonic distortion		Less than 0.07% 1kHz unity
Phantom power		DC+24V
Power requirement		DC+48V
Power consumption		2.2W
Operation guaranteed temperature range		0-45°C
Operation guaranteed humidity range		25-85%
External dimensions (including protrusions)		135 mm × 148.4 mm × 84.2 mm (W × D × H)
Net Weight		570g (900g including the optional bottom weight)
Finish	Top panel	Gun metal
	Enclosure	Black
Included Accessories		Quick Setup Guide, Warranty

Input/output specifications

Analog input specifications

Input Terminals	Gain	Load Impedance	Input Level			Connector	Balanced/ Unbalanced
			Minimum	Nominal	Maximum		
MIC Input	7-47dB	5k ohm	–60dBu	–40dBu	–20dBu	XLR female	Balanced

Analog output specifications

Output Terminals	Load Impedance	Output Level			Connector
		Minimum	Nominal	Maximum	
Headphones	32ohm	-	1.5mW	15mW	ϕ3.5mm Stereo
Speaker	8ohm	-	50mW	100mW	-

Digital input/output specifications

Terminals	Format	Data length/Sampling Frequency	Audio	Connector
DU CHAIN A/B	Original format	24bit/48kHz	Floor, Return, Interpretation language, Active Mic	RJ-45

Control I/O specifications

Terminals	Format	Level	Connector
Extension terminal	UART	+5V, TX, RX, GND	RJ-11

ATUC-50IU specifications

General specifications

I/O connector	Inputs	Euroblock connector: microphone input terminal × 1 set, operation input terminal × 6 sets, and general purpose input terminal (GPI) × 8 sets
	Outputs	Euroblock connector: speaker output terminal × 1 set, headphone output terminal × 1 set, status output terminal × 6 sets, power supply terminal × 1 set, general output terminals (GPO) × 8
	CHAIN	DU/CU connection terminals
Data length/Sampling frequency		24bit/48kHz
Frequency response		+1.0 - 2.0 dB, 20 Hz - 20 kHz (+4 dBu output at 1 kHz)
Dynamic range		104 dB, A-Weighted
S/N ratio		84 dB, A-Weighted
Headroom		20 dB
Noise equivalent input		Less than –125 dBu, Rs = 150 Ω
Total harmonic distortion		Less than 0.07%, 1 kHz unity
Phantom Power		DC+48V
Power requirement		DC+48V
Power Consumption		3.4 W
Operation guaranteed temperature range		0 - 45°C
Operation guaranteed humidity range		25 - 85%
External dimensions (including protrusions)		117 mm × 175.4 mm × 25 mm (W × D × H)
Weight		460g
Included Accessories		Quick Start Guide, Euroblock connecters × 13 (green × 3, black × 10), warranty

Input/output specifications

Analog input specifications

Input Terminals	Gain	Load Impedance	Input Level			Connector	Balanced/ unbalanced
			Minimum value	Nominal value	Maximum value		
MIC Input	7 - 47 dB	4k ohm	-60 dBu	-40 dBu	-20 dBu	Euroblock	Balanced

Analog output specifications

Output Terminals	Load Impedance	Output Level			Connector
		Minimum value	Nominal value	Maximum value	
Headphones	32 ohm	-	1.5 mW	15 mW	Euroblock
Speaker	8 ohm	-	50 mW	100 mW	Euroblock

Digital input/output specifications

Terminals	Format	Data length/Sampling frequency	Audio	Connector
DU CHAIN A/B	Original format	24 bit/48 kHz	Floor, Return, Interpretation language, Active Mic	RJ-45

Control I/O specifications

Terminals	Connector
Operation input terminal	Euroblock
Status output terminal	Euroblock
General purpose input/output terminal	Euroblock

ATLK-EXT165 specifications

General specifications

I/O connector	LINK POWER STATUS	Euroblock connector (3 pins)
	CHAIN	DU/CU connecter terminals (RJ-45 × 2)
Power supply		100 - 240 VAC, 50/60 Hz
Power Consumption		15 - 160 W (max.); 50 ATUC-50DUs is equivalent to 2.55 A
Operation guaranteed temperature range		0 - 45 °C
Operation guaranteed humidity range		25 - 85%
External dimensions (including protrusions)		217 mm × 333.5 mm × 40.5 mm (W × D × H)
Weight		2.2 kg
Included Accessories		Quick Start Guide, Euroblock connector × 1 (black), table mount, warranty

ATLK-EXT25 specifications

General specifications

I/O connector	Inputs	Operation input terminal
	Outputs	Audio-Technica LINK POWER STATUS output terminal × 1
	CHAIN	Audio-Technica LINK A/B terminal
Power supply		PoE IN (IEEE 802.3af/IEEE 802.3at compliant) or 100 VAC 50/60 Hz (using AC adapter 12 V, 3 A)
Power Consumption		1 - 36 W (max.)
Operation guaranteed temperature range		0 - 40 °C
Operation guaranteed humidity range		25 - 85%
External dimensions (including protrusions)		117 mm × 173 mm × 25 mm (W × D × H)
Weight		494 g
Included Accessories		Quick Start Guide, Euroblock connector × 2

ATUC-VU specifications

General specifications

Power supply	DC+5V (supplied from DUa)
Power consumption	Max. 240 mA
Compatible NFC	MIFARE
Operation guaranteed temperature range	0 - 40 °C
Operation guaranteed humidity range	25 - 85%
External dimensions (including protrusions)	149.2 mm × 66.3 mm × 20.9 mm (W × D × H)
Cable length	420 mm
Weight	105 g (including cable)

ATUC-M43H/58H specifications

	ATUC-M43H	ATUC-M58H
Type	Back electret type	
Directional characteristics	Hyper-cardioid	
Frequency characteristics	100-15,000Hz	
Sensitivity (0dB=1V/1Pa, 1kHz)	–40dB	
Maximum input sound pressure level (1kHz, THD1%)	134dB S.P.L.	
Signal-to-Noise ratio (1kHz, 1Pa)	64dB or more	
Output impedance	250ohms balanced	
Finish	Mat black baking paint finish	
External dimensions	18.9 mm diameter × 430 mm	18.9 mm diameter × 580 mm
Weight	Approx. 82g	Approx. 92g

ATUC-M32L specifications

Type	Back electret type
Directional characteristics	Super-directive
Frequency characteristics	100 - 15,000Hz
Sensitivity (0dB=1V/1Pa, 1kHz)	–34dB (19.9mV)
Maximum input sound pressure level (1kHz, THD1%)	128dB S.P.L
Signal-to-Noise ratio (1kHz, 1Pa)	70dB
Output impedance	250ohm
Phantom power supply	DC24 - 52V, 7.7mA
External dimensions	ϕ10.0 × 320.0 mm
Weight	Approx. 83g
Output connector	3-pin XLR-M type, balanced

ATUC-IRCU/ATUC-IRCUDAN specifications

General specifications

I/O connector	Inputs		MIC/LINE×2, AUX (ST) ×1, INTERPRETATION RETURN×2
	Outputs		BAL.×4, UNBAL.×1
	LINK/CHAIN		DU A/B terminals, CU A/B terminals (DU C/D terminals)
	Dante/control (ATUC-IRCUDAN only)		Dante Primary/Secondary, NETWORK port
	IR antenna		IR antenna I/O terminals × 4
Recording (*1)	Via USB storage device		1/2/3/4 track (WAV) (BWF standard) 1/2 track (MP3) (Original format)
	MP3 bit rate		64kbps/128kbps/192kbps/256kbps/320kbps
Playback (*1)	WAV	Data length	16bit, 24bit
		Sampling frequency	48kHz
	MP3 (*2)	Bit rate	32-320kbps
		Sampling frequency	48kHz
	Maximum file size		2GB
	Maximum number of files		30files
Data length			24bit
Sampling frequency			48kHz
Signal delays			MIC Input to Output: 1ms DU to CU: 1.2ms
Frequency response			+1.0, -2.0dB, 20Hz - 20kHz (+4dBu output at 1kHz)
Dynamic range			110dB, A-Weighted
S/N ratio			89dB, A-Weighted
Headroom			20dB
Equivalent input noise	Mic/Line 1-2		Less than –126dBu, Rs = 150ohm
Residual noise			Less than –86dBu, A-Weighted
Total harmonic distortion			Less than 0.03%, 1 kHz unity
Crosstalk @ 1 kHz			Less than –80dB
OLED display			20 × 2Character type, Color: Yellow Operating life: 100,000hours
Phantom power supply			DC+48V
Power supply			AC 100V - 240V 50/60Hz
Power consumption			26W to 175W (maximum)
Operation guaranteed temperature range			0 - 45°C
Operation guaranteed humidity range			25 - 85%
External dimensions (including protrusions)			482 mm × 358 mm × 49.8 mm (W × D × H)
Weight			4.76kg
Finish	Front panel		Black
	Top & Rear		Black
Included Accessories			Power cord, Euroblock connectors (9pieces)

*1 Supported file systems: FAT16/FAT32

*2 Only MPEG-1 Audio Layer-3 is supported.

Input/output specifications

Analog input specifications

Input Terminals		Gain	Load Impedance	Input Level			Connector	Balanced/ Unbalanced
				Minimum	Nominal	Maximum		
MIC/LINE Input 1-2	Mic	15 - 59dB	5k ohm	–60dBu	–40dBu	–16dBu	Euroblock	Balanced
	Line	15 - 59dB	20k ohm	–40dBu	+4dBu*/ 0dBu	+24dBu*/ +20dBu	Euroblock	Balanced
AUX Input LR (Mono ×2)		-	10k ohm	-	0dBV*/ –10dBV/ –20dBV	+20dBV*/ +10dBV/ 0dBV	RCA Pin	Unbalanced
INTERPRETATION RETURN 1-2		-	20k ohm	-	+4dBu*/ 0dBu	+24dBu*/ +20dBu	Euroblock	Balanced

* Default setting

Analog output specifications

Output Terminals	Load Impedance	Output Level			Connector	Balanced/ Unbalanced
		Minimum	Nominal	Maximum		
BAL. (Balanced) Output 1-4	150ohm	-	+4dBu	+24dBu	Euroblock	Balanced
UNBAL. (Unbalanced) Output 1	300ohm	-	0dBV	+20dBV	Euroblock	Unbalanced

Infrared input/output specifications

Terminals	Load Impedance	Connector
IR antenna terminal	75ohm	BNC

Digital input/output specifications

Terminals	Format	Data length/sampling frequency	Audio	Connector
USB	USB	24bit/48kHz	Playback: MP3 or WAV, Record: MP3 or WAV	USB (A type)
DU CHAIN A/B (C/D)	Original format	24bit/48kHz	Floor, Return, Interpretation language, Active Mic	RJ-45
CU LINK A/B	Original format	24bit/48kHz	Floor, Return, Interpretation language, Active Mic	RJ-45

Control I/O specifications (ATUC-IRCU)

Terminals	Format	Level	Connector
NETWORK	IEEE802.3	10BASE-T/100BASE-TX	RJ-45

Control I/O specifications (ATUC-IRCUDAN)

Terminals	Format	Level	Connector
DANTE Primary	DANTE	10BASE-T/100BASE-TX /1000base-TX	RJ-45
DANTE Secondary	DANTE	10BASE-T/100BASE-TX /1000base-TX	RJ-45
NETWORK	IEEE802.3	10BASE-T/100BASE-TX	RJ-45

ATUC-IRDU specifications

General specifications

Interpretation format		Infrared
Frequency		1MHz - 10 MHz
Modulation method		FM
Wavelength		870nm
Range		Max. 6m
I/O connector	Inputs	Microphone jack
	Outputs	Headphone jack×2
Frequency response		+1.0, -2.0dB, 200Hz - 5kHz (+4dBu output at 1kHz)
Dynamic range		65dB, A-Weighted
Signal-to-noise ratio		58dB, A-Weighted
Headroom		7dB
Equivalent input noise		Less than –80dBu, Rs = 150ohm
Total harmonic distortion		Less than 1%, 1kHz unity
Phantom power supply		DC+24V
Battery		LI-240a (lithium-ion battery) × 2
Battery life	1 battery	6hours 40minutes (transmitting:receiving = 1:4)
	2 batteries	13hours 20minutes (transmitting:receiving = 1:4)
Power supply		DC+12V, 1A
Power consumption		4.0W
Operation guaranteed temperature range		0 - 40°C
Operation guaranteed humidity range		25 - 85%
External dimensions (including protrusions)		189 mm × 150 mm × 71.3 mm (W × D × H)
Weight		Approx. 800g (including 2batteries)
Finish	Front panel	Gunmetal
	Enclosure	Black
Included Accessories		Battery cover × 2

Input/output specifications

Analog input specifications

Input Terminals	Gain	Load Impedance	Input Level			Connector	Balanced/ Unbalanced
			Minimum	Nominal	Maximum		
MIC Input	7 - 47dB	5k ohm	–60dBu	–40dBu	–20dBu	XLR female	Balanced

Analog output specifications

Output Terminals	Load Impedance	Output Level			Connector
		Minimum	Nominal	Maximum	
Headphones	32ohm	-	1.5mW	15mW	ϕ3.5-mm stereo
Speaker	8ohm	-	50mW	100mW	-

ATUC-IRA specifications

Interpretation format		Infrared
Frequency		1MHz - 10MHz
Modulation method		FM
Wavelength		870nm
Range		Max. 6m
Power consumption		4.0W
Operation guaranteed temperature range		0 - 40°C
Operation guaranteed humidity range		25 - 85%
External dimensions (including protrusions)		130 mm × 41.3 mm × 130 mm (W × D × H)
Weight		Approx. 260g
Finish	Top panel	Metallic white color
	Enclosure	White matte texture
Included Accessories		Mounting bracket × 1, screws × 2

Input/output specifications

Terminals	Load	Channel		Connector
IR antenna	75ohm	Talk 10 ch	Monitor 4ch	BNC

ATUC-IRD specifications

Number of distributions	2
Frequency band	1 - 10MHz
Mixing and distribution losses	5dB or less
Input/output impedance	75ohm
Connection terminals	BNC jack (power passing type, 50V or less, 1A or less)
Operation guaranteed temperature range	–10 to 50°C
External dimensions (including protrusions)	100 mm × 83.6 mm × 30 mm (W × D × H)
Weight	167g

ATCS-B60 specifications

Power supply	AC 100V, 50/60Hz (AC adapter, 10V 7.2A)
Rated capacity	60VA (10V 6A)
Charging current	550mA
Charging time	Approximately 5.5hours (when charging specified rechargeable batteries)
External dimensions (including protrusions)	130 mm × 340 mm × 94 mm (W × D × H)
Weight	2kg (not including AC adapter and power supply cord)

Audio-Technica Corporation
2-46-1 Nishi-naruse, Machida, Tokyo 194-8666, Japan
www.audio-technica.com
©2024 Audio-Technica Corporation
Global Support Contact: www.at-globalsupport.com

ver.1 2019.02.15
222304350-02-06 ver.6 2024.06.15