AT-4200B-EB

ATTENUATOR 200 W

Designed with ergonomics of the human hand in mind, AT-4000 Series Attenuators' control knob comes in a size that provides comfortable grip and excellent control with every turn. Consisting of 8 steps attenuation, the series is built to provide precision volume control with a difference of 3dB in every step. The built-in overriding relay feature allows emergency paging which is indicated by the LED light when activated.

Key features

- Attenuators with 8 step attenuation control (+/- 3 dB)
- Ergonomic control knob with better grip for easy turn
- 24 VDC overriding relay with red LED indicator
- Terminal block for thicker diameter cable
- Clip-on face plate
- 200 W

Specifications

Input Capacity	200W
Attenuation	8 Steps (0dB, -3dB, -9dB, -12dB, -15dB, -18dB, OFF)
Override Indicator	Red LED (4-wire connection only)
Override Voltage	24V, 11mA DC (4-wire connection only)
Cable Requirements	Cable range 22 - 14 AWG
Terminal	Screw type x 5
Finish	Knob, Cover Panel: ABS Resin, White (RAL 9016 or equivalent) Front Panel (Plate): Surface treated steel plate
Dimensions	86 (W) x 86 (H) x 51 (D) mm
Weight	0.49kg
Included Accessories	Box (85.5 (W) x 85.5 (H) x 60 (D) mm) x1, Back plate mounting screw x2

Dimensions

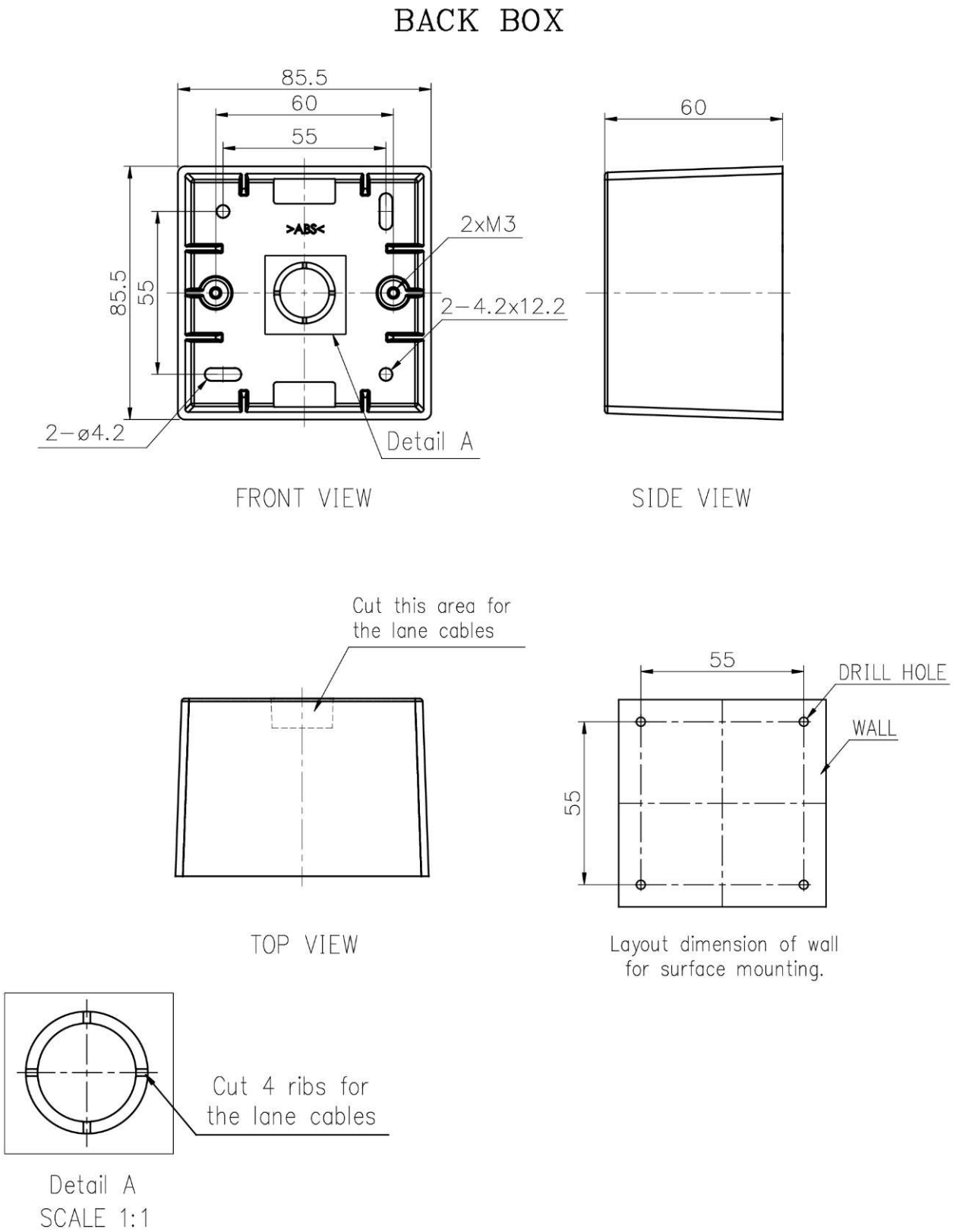

Note : Drill hole dimensions depend on wall type.

UNIT : mm SCALE : 1/2

Published on 2026/02/14