TOA

OPERATING INSTRUCTIONS

MIXER AMPLIFIER

A-3506D, A-3512D, A-3524D, A-3548D

The figure represents the A-3548D.

Thank you for purchasing TOA's Mixer amplifier.
Please carefully follow the instructions in this manual to ensure long, trouble-free use of your equipment.

TABLE OF CONTENTS

1. SAFETY PRECAUTIONS 3

2. GENERAL DESCRIPTION 5

3. FEATURES 5

4. HANDLING PRECAUTIONS 5

5. INSTALLATION PRECAUTIONS 6

6. NOMENCLATURE AND FUNCTIONS 7

Front 7

Rear 8

7. CONNECTIONS 11

7.1. Speaker Connection 11

7.2. Input Terminal Connections and Settings 12

7.3. Connecting to the Power Remote Control Output Terminal 13

7.4. Connecting to the Emergency Control Output Terminal 14

7.5. Connecting to the Zone Control IN/OUT Terminal 14

7.6. Connecting to the Control Input Terminal 15

7.7. Connecting the External Equipment between the Line Output and the Power Amplifier 15

7.8. Removable Terminal Plug Connection 16

8. SETTINGS 17

8.1. Zone Selection Button Setting 17

8.2. Line Output Interlock Switch Setting 17

8.3. Audio Detection Function Setting 17

8.4. Broadcast Mode Setting for Input 1 18

9. VOLUME ADJUSTMENT 18

10. SPEAKER ZONE SELECTION 18

11. INSTALLING TO AN EQUIPMENT RACK 19

12. CONTROL SETTINGS 19

13. PRIORITY BROADCAST FUNCTION 20

13.1. Priority Broadcast 20

13.2. Emergency Broadcast 21

13.3. Normal Broadcast 21

13.4. Relationship between Priority Broadcast by Control Input/ Emergency Broadcast and Power On/Off 21

13.5. Factory-preset Operation 22

13.6. Operation When the Priority Broadcast Function Is Activated by Audio Detection 23

14. BLOCK DIAGRAM 25

15. SPECIFICATIONS 26

Accessories 27

Optional products 27

1. SAFETY PRECAUTIONS

- Before installation or use, be sure to carefully read all the instructions in this section for correct and safe operation.
- Be sure to follow all the precautionary instructions in this section, which contain important warnings and/or cautions regarding safety.
- After reading, keep this manual handy for future reference.

Safety Symbol and Message Conventions

Safety symbols and messages described below are used in this manual to prevent bodily injury and property damage which could result from mishandling. Before operating your product, read this manual first and understand the safety symbols and messages so you are thoroughly aware of the potential safety hazards.

⚠ WARNING

Indicates a potentially hazardous situation which, if mishandled, could result in death or serious personal injury.

When Installing the Unit

- Do not expose the unit to rain or an environment where it may be splashed by water or other liquids, as doing so may result in fire or electric shock.

- Use the unit only with the voltage specified on the unit. Using a voltage higher than that which is specified may result in fire or electric shock.

- Do not cut, kink, otherwise damage nor modify the power supply cord. In addition, avoid using the power cord in close proximity to heaters, and never place heavy objects -- including the unit itself -- on the power cord, as doing so may result in fire or electric shock.

- Be sure to ground to the safety ground (earth) terminal to avoid electric shock. Never ground to a gas pipe as a catastrophic disaster may result.

- Avoid installing or mounting the unit in unstable locations, such as on a rickety table or a slanted surface. Doing so may result in the unit falling down, causing personal injury and/or property damage.

- Since the unit is designed for indoor use, do not install it outdoors. If installed outdoors, the aging of parts causes the unit to fall off, resulting in personal injury. Also, when it gets wet with rain, there is a danger of electric shock.

- The terminals marked with the symbol ϟ are hazardous live.
  The external wiring to these terminals requires installation by an instructed person.

When the Unit is in Use

- Should the following irregularity be found during use, immediately switch off the power, disconnect the power supply plug from the AC outlet and contact your nearest TOA dealer. Make no further attempt to operate the unit in this condition as this may cause fire or electric shock.
  - · If you detect smoke or a strange smell coming from the unit.
  - · If water or any metallic object gets into the unit
  - · If the unit falls, or the unit case breaks
  - · If the power supply cord is damaged (exposure of the core, disconnection, etc.)
  - · If it is malfunctioning (no tone sounds.)

- To prevent a fire or electric shock, never open nor remove the unit case as there are high voltage components inside the unit. Refer all servicing to your nearest TOA dealer.

- Do not place cups, bowls, or other containers of liquid or metallic objects on top of the unit. If they accidentally spill into the unit, this may cause a fire or electric shock.

- Do not insert nor drop metallic objects or flammable materials in the ventilation slots of the unit's cover, as this may result in fire or electric shock.

- Do not touch a power supply plug during thunder and lightning, as this may result in electric shock.

⚠ CAUTION

Indicates a potentially hazardous situation which, if mishandled, could result in moderate or minor personal injury, and/or property damage.

When Installing the Unit

- Never plug in nor remove the power supply plug with wet hands, as doing so may cause electric shock.

- When unplugging the power supply cord, be sure to grasp the power supply plug; never pull on the cord itself. Operating the unit with a damaged power supply cord may cause a fire or electric shock.

- When moving the unit, be sure to remove its power supply cord from the wall outlet. Moving the unit with the power cord connected to the outlet may cause damage to the power cord, resulting in fire or electric shock. When removing the power cord, be sure to hold its plug to pull.

- Do not block the ventilation slots in the unit's cover. Doing so may cause heat to build up inside the unit and result in fire. Also, periodically clean the ventilation slots of dust.

- Avoid installing the unit in humid or dusty locations, in locations exposed to the direct sunlight, near the heaters, or in locations generating sooty smoke or steam as doing otherwise may result in fire or electric shock.

- To avoid electric shocks, be sure to switch off the unit's power when connecting speakers.

- Be sure to follow the instructions below when rack-mounting the unit. Failure to do so may cause a fire or personal injury.
  - Install the equipment rack on a stable, hard floor. Fix it with anchor bolts or take other arrangements to prevent it from falling down.
  - When connecting the unit's power cord to an AC outlet, use the AC outlet with current capacity allowable to the unit.
  - Rack-mounting screws are not supplied with the optional MB-25B Rack mounting bracket. Prepare them that are appropriate for the equipment rack.

When the Unit is in Use

- Do not place heavy objects on the unit as this may cause it to fall or break which may result in personal injury and/or property damage. In addition, the object itself may fall off and cause injury and/or damage.

- Make sure that the volume control is set to minimum position before power is switched on. Loud noise produced at high volume when power is switched on can impair hearing.

- Do not operate the unit for an extended period of time with the sound distorting. Doing so may cause the connected speakers to heat, resulting in a fire.

- Contact your TOA dealer as to the cleaning. If dust is allowed to accumulate in the unit over a long period of time, a fire or damage to the unit may result.

- If dust accumulates on the power supply plug or in the wall AC outlet, a fire may result. Clean it periodically. In addition, insert the plug in the wall outlet securely.

- Switch off the power, and unplug the power supply plug from the AC outlet for safety purposes when cleaning or leaving the unit unused for 10 days or more. Doing otherwise may cause a fire or electric shock.

Warning: Operation of this equipment in a residential environment could cause radio interference.

- The socket-outlet shall be installed near the equipment and the plug (disconnecting device) shall be easily accessible.

- The apparatus shall be connected to a mains socket outlet with a protective earthing connection.

2. GENERAL DESCRIPTION

TOA's A-3500D Series is a PA amplifier equipped with 4 microphone inputs and 1 auxiliary input, and 2-channel zone selector.
In addition to each individual input volume control function, it is equipped with the Priority broadcast function.
Also, the PFC circuit is provided inside.
The A-3500D Series mixer amplifier is ideal for paging announcement and BGM applications in schools, offices, and super markets.

3. FEATURES

- 4 kinds of power amplifier outputs: 60 W (A-3506D), 120 W (A-3512D), 240 W (A-3524D), and 480 W (A-3548D)
- Lightweight owing to the built-in digital power amplifier unit
- Emergency broadcast and priority broadcast activated by way of the control input (contact)
- Voice detection function that allows the priority broadcast to be activated by voice
- Remote confirmation function that allows you to confirm the unit's status through the web browser using a PC
- Switchable speaker output
  A-3506D: 8 to 16 Ω or 100 V line
  A-3512D, A-3524D, A-3548D: 4 to 16 Ω or 100 V line
- Zone selection buttons for making broadcasts to 2 zones
- Electronically-balanced microphone inputs (Inputs 1 to 4) and phantom power available of Microphone inputs 1 and 2.
- Fine sound adjustment possible by connecting a signal processor like an equalizer between the line output and the power amplifier input
- Bass and treble tone control knobs
- Output level meter
- Master volume control knob to simultaneously adjust all input levels

4. HANDLING PRECAUTIONS

Some operations differ depending on this unit's power ON/OFF state. The table below shows the relationship between the power ON/OFF state and the corresponding operation.

Power state	⏻	Normal broadcast		Priority broadcast/Emergency broadcast
		From Speaker output	From Recording output	
Not energized	Unlit	Disabled	Disabled	Disabled
Energized (Power turned OFF)	Unlit	Disabled	Disabled	Occasionally possible (Power is temporarily turned ON.)
Energized (Power turned ON)	Lit	Enabled	Enabled	Enabled

5. INSTALLATION PRECAUTIONS

- The supplied power supply cord is designed for exclusive use with the unit. Never use it with other equipment.
- Install the unit in a well-ventilated environment so that temperature inside the unit will not rise.
- When installing the unit on the desk, keep the unit over 10 cm away from objects that may obstruct air flow as shown below.
- When installing the unit in an equipment rack, mount perforated panels. See "INSTALLING TO AN EQUIPMENT RACK" on p. 19.

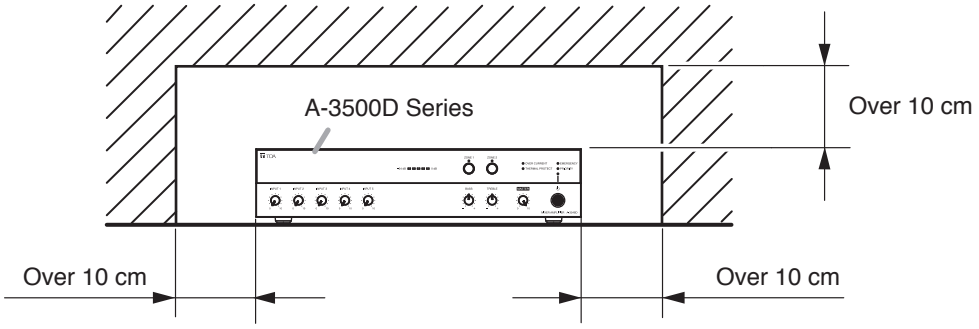

6. NOMENCLATURE AND FUNCTIONS

[Front]

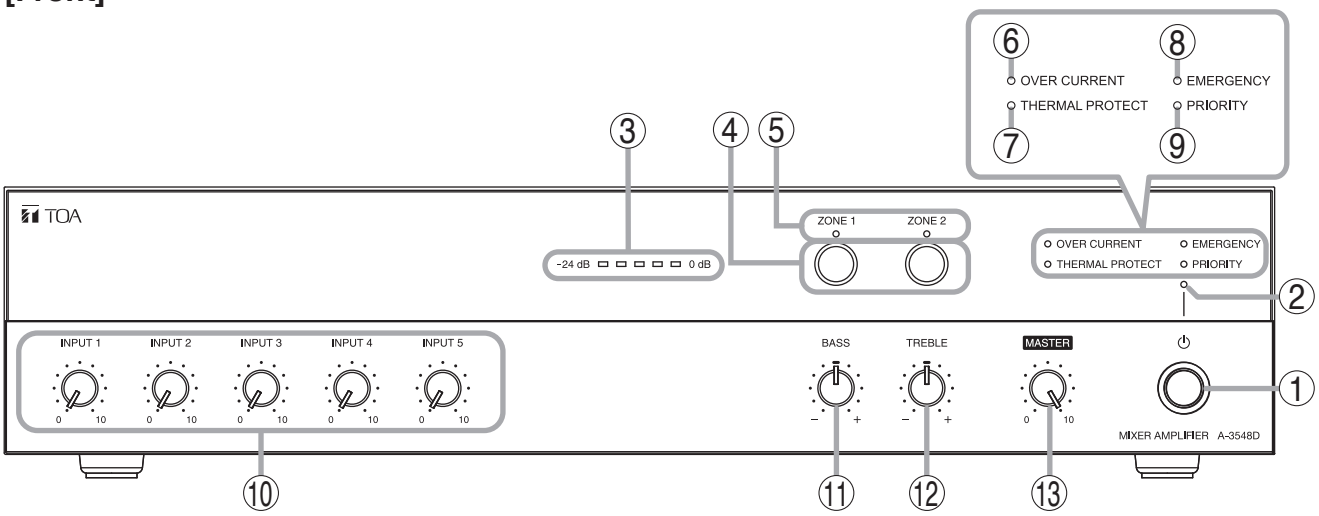

The figure represents the A-3548D.

1. Power switch
Press this switch to turn on the power. To turn off the power, press this switch again.

Note
Operation of the power switch is disabled while the priority broadcast or the emergency broadcast is in progress.
(See "PRIORITY BROADCAST FUNCTION" on p. 20.)

2. Power indicator (Green)
Lights when the power is switched on and goes off when it is switched off.

3. LED level meter (Green x 3, Orange x 1, Red x 1)
Displays the output level.
Adjust each volume control knob for an appropriate output sound so that the red indicator does not light. Operating the unit while the red indicator remains lit causes the sound quality to degrade.

4. Zone selection buttons
Select the broadcast zones. Pressing the Zone 1 selection button causes the Zone 1 to be selected, outputting the signals from the zone 1 speaker output terminal (21) on the rear panel.
In the same manner, pressing the Zone 2 selection button causes the Zone 2 to be selected, outputting the signals from the zone 2 speaker output terminal (21) on the rear panel.

Note
These buttons are effective only when the output impedance setting switch (22) is set to 100 V line (high impedance).

5. Zone indicator (Green)
The indicator corresponding to the selected zone lights.

Note
These indicators work only when the output impedance setting switch (22) is set to 100 V line (high impedance).

6. Overcurrent protection indicator (Red)
Lights while the overcurrent protection circuit is operating if overcurrent flows through the speaker output.

7. Thermal protection indicator (Red)
Lights while the internal protection circuit is operating.

8. Emergency broadcast indicator (Red)
Lights while the emergency broadcast is in progress.
(See "PRIORITY BROADCAST FUNCTION" on p. 20.)

9. Priority broadcast indicator (Green)
Lights while the priority broadcast is in progress.
(See "PRIORITY BROADCAST FUNCTION" on p. 20.)

10. Volume control knobs for Inputs 1 through 5
Adjust the volume values of the Inputs 1 through 5. Rotate each knob clockwise to increase the volume value and counterclockwise to decrease it.
(See "VOLUME ADJUSTMENT" on p. 18.)

11. Bass control knob
Rotate the knob clockwise to boost the bass and counterclockwise to cut it.
Setting the knob at the center makes the frequency characteristic flat.

12. Treble control knob
Rotate the knob clockwise to boost the treble and counterclockwise to cut it.
Setting the knob at the center makes the frequency characteristic flat.

13. Master volume control knob
Adjusts all the volume levels simultaneously. Rotate the knob clockwise to increase the whole volume level and counterclockwise to decrease it.
(See "VOLUME ADJUSTMENT" on p. 18.)

[Rear]

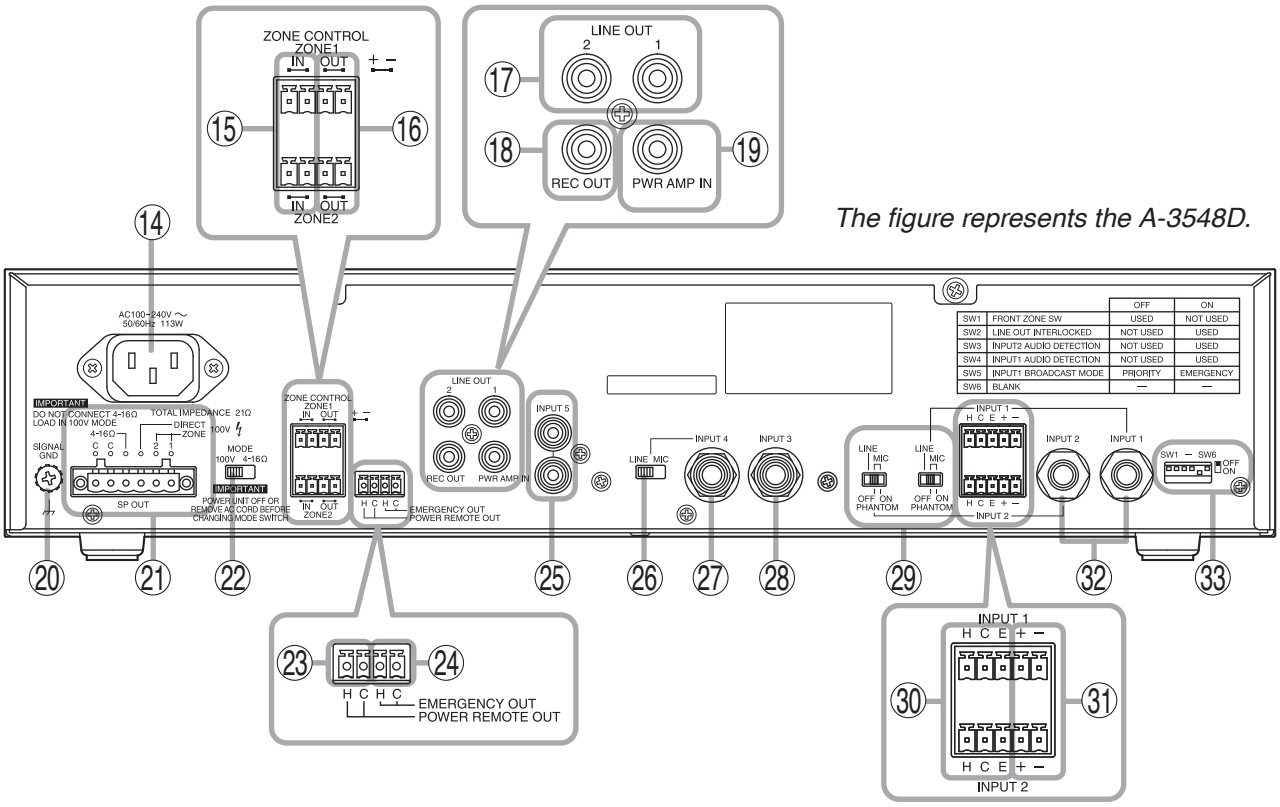

		OFF	ON
SW1	FRONT ZONE SW	USED	NOT USED
SW2	LINE OUT INTERLOCKED	NOT USED	USED
SW3	INPUT2 AUDIO DETECTION	NOT USED	USED
SW4	INPUT1 AUDIO DETECTION	NOT USED	USED
SW5	INPUT1 BROADCAST MODE	PRIORITY	EMERGENCY
SW6	BLANK	—	—

14. AC inlet

Connect the supplied power cord to this receptacle.

> **⚠ WARNING**
>
> Be sure to use the supplied power cord. Using any other power cord may cause electric shock.

15. Zone control input terminals

Short-circuit current: 10 mA or less, open voltage: 35 V DC or less, Removable terminal block (3.81 mm, 4 pins)

Input the control signals for selecting zones. While the terminals are closed, the corresponding zone becomes in selected state, disabling operation of the Zone selection button (4).

Note

Zone control is effective only when the output impedance setting switch (22) is set to 100 V line (high impedance).

16. Zone control output terminals

Open collector output, withstand voltage: 30 V DC or less, current: 25 mA or less, Removable terminal block (3.81 mm, 4 pins)

Output terminals for using the remote control of other equipment. The output signal has polarity (+/–). The terminal corresponding to the selected zone is closed.

Note

Zone control is effective only when the output impedance setting switch (22) is set to 100 V line (high impedance).

17. Line output jacks 1 and 2

0 dB*, 600 Ω, unbalanced type, RCA pin jack x 2

Can be interlocked with the zone selection state. Signals are output from the Line output jacks 1 and 2 regardless of the zone selection when the Line output selection interlock is set to OFF. With the Line output interlock set to ON, the signals are output from the Line output jack 1 when the Zone 1 is selected, and from the Line output jack 2 when the Zone 2 is selected.

Use Switch 2 (Line output interlock switch) of the DIP switch (33) to make the interlock setting.

18. Recording output jack

0 dB*, 600 Ω, unbalanced type, RCA pin jack

Outputs the audio signals of the SUB output.

(See "BLOCK DIAGRAM" on p. 25.)

Used to record the broadcast contents by connecting the external recording device to this jack.

19. Power amplifier input jack

0 dB*, 600 Ω, unbalanced type, RCA pin jack

Input the output of the signal processor or other devices connected to the line output jack.

(See "Connecting the External Equipment between the Line Output and the Power Amplifier" on p. 15.)

Connecting a pin plug to this jack disconnects the power amplifier section from the preamplifier section inside the unit.

* 0 dB = 1 V

20. Functional ground terminal

Noise may be generated when external equipment is connected to the unit. In this case, connect this terminal to the functional ground terminal of the external equipment, and the noise may be reduced.

Note

This ground is not for protective ground.

21. Speaker output terminal

Removable terminal block (5.00 mm, 6 pins)

Outputs the audio signals of the MAIN output or power amplifier output. (See "BLOCK DIAGRAM" on p. 25.)

When the Zone 1 is selected, audio signals are output from the Zone 1 speaker output terminal. In the same manner, when the Zone 2 is selected, audio signals are output from the Zone 2 speaker output terminal.

When set to High impedance, audio signals are always output from the Direct speaker output terminal regardless of the Zone selection button setting.

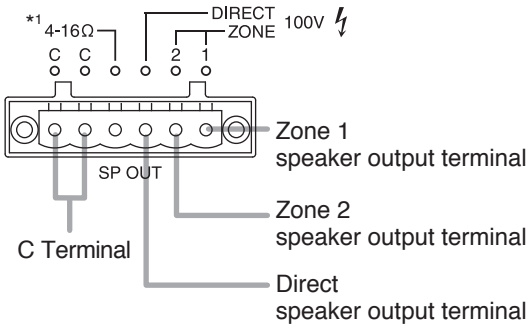

The table below shows the specifications of each output.

	A-3506D	A-3512D	A-3524D	A-3548D
Rated output	60 W	120 W	240 W	480 W
Low impedance	8 to 16 Ω	4 to 16 Ω		
High impedance (100 V line)	170 Ω	83 Ω	42 Ω	21 Ω

Notes

- Never use the low impedance and high impedance terminals simultaneously. Doing so may cause damage to the unit or the peripheral equipment.
- Never make connection to low impedance terminal when the Impedance setting switch (22) is set to 100 V.

Tip

To change impedance between high and low, use the Impedance setting switch (22).

22. Impedance setting switch

Changes the speaker output impedance either to low or high.

100 V: High impedance
4 – 16 Ω*1: Low impedance

Notes

- Make sure that the power is switched OFF before changing this switch setting. Change cannot be performed when the power is on.
- The impedance remains as it is even if you change the switch setting when the power is ON. However, the impedance will change when you turn the power ON again after turning the power OFF.

23. Power remote control output terminal

Open collector output, withstand voltage: 30 V DC or less, current: 25 mA or less, removable terminal block (3.50 mm, 4 pins)

An output terminal that can be used for remote control of other equipment. Operates in synchronization with the unit's power ON/OFF. When the unit's power is on, it is activated.

24. Emergency control output terminal

Open collector output, withstand voltage: 30 V DC or less, current: 25 mA or less, removable terminal block (3.50 mm, 4 pins)

An output terminal that can be used for remote control of other equipment.

It is activated during the emergency broadcast made from the unit.

25. Input 5 jacks

–20 dB*2, 10 kΩ, unbalanced type, RCA pin jack x 2

Input jacks dedicated for LINE

26. Input setting switch (Input 4)

Set the input sensitivity level (LINE or MIC) of the Input 4.

Line: –20 dB*2
Mic: –60 dB*2

27. Input jack (Input 4)

–60 dB*2 (MIC)/–20 dB*2 (LINE), 600 Ω, electronically-balanced, phone jack

28. Input jack (input 3)

–60 dB*2, 600 Ω, electronically-balanced, dedicated input for microphone with a phone plug

*1 In case of the A-3506D: 8 – 16 Ω
*2 0 dB = 1 V

29. Input setting switches (Inputs 1 and 2)

Set the input sensitivity level (LINE or MIC) of the Inputs 1 and 2 (30, 32). When switched to the microphone input, set the phantom power to ON or OFF.

Switch position		Input specification at the time of setting
MIC	PHANTOM ON	–60 dB*, 600 Ω, phantom power ON
	PHANTOM OFF	–60 dB*, 600 Ω, phantom power OFF
LINE		–20 dB*, 600 Ω, with no phantom power

Tip

Phantom power is a 24 V DC.

30. Input terminals (Inputs 1 and 2)

–20 dB* (LINE)/–60 dB* (MIC), 600 Ω, electronically-balanced, removable terminal block (3.81 mm, 3 pins)

Input sensitivity can be switched either to the Line input sensitivity or the Microphone input sensitivity.

The input sensitivity can be changed with the Input setting switch (29).

Note

Audio signals applied to this Input 1 or 2 are not output if a phone plug is inserted into the Input jack (32) of Input 1 or 2, respectively.

31. Control input terminals (Control inputs 1 and 2)

Short-circuit current: 10 mA or less, open voltage: 35 V DC or less, Removable terminal block (3.81 mm, 2 pins)

Input the control signals for controlling the priority broadcast.

While the terminals are closed, the corresponding trigger of the priority broadcast becomes input state.

32. Input terminals (Inputs 1 and 2)

–20 dB* (LINE)/–60 dB* (MIC), 600 Ω, electronically-balanced, phone jack)

Input sensitivity can be switched either to the Line input sensitivity or the Microphone input sensitivity.

The input sensitivity can be changed with the Input setting switch (29).

33. DIP switch

- **Switch 1 (ZONE switch)**
  Sets the Zone selection buttons (4).
  (See "Zone Selection Button Setting" on p. 17.)
- **Switch 2 (Line output interlock switch)**
  Sets an interlock between the zone selection and the line output.
  (See "Line Output Interlock Switch Setting" on p. 17.)
- **Switch 3**
  (Input 2 audio detection selection switch)
  Sets an audio detection function for Input 2.
  (See "Audio Detection Function Setting" on p. 17.)
- **Switch 4**
  (Input 1 audio detection selection switch)
  Sets an audio detection function for Input 1.
  (See "Audio Detection Function Setting" on p. 17.)
- **Switch 5**
  (Input 1 broadcast function selection switch)
  Sets the broadcast mode for Input 1.
  (See "Broadcast Mode Setting for Input 1" on p. 18).
- **Switch 6**
  Not used.

Note

The audio detection function works only while the Power switch (1) is placed in ON state.

* 0 dB = 1 V

7. CONNECTIONS

External cable wiring must be only carried out by qualified and trained personnel.

7.1. Speaker Connection

For cable wiring to the removable terminal block, refer to p. 16.

Notes

- Never make connection to both 4 – 16 Ω* (low impedance) and 100 V line (high impedance) terminals simultaneously.
- Never make connection to 4 – 16 Ω* terminal when the Impedance setting switch is set to 100 V.

A-3506D/3512D/3524D/3548D

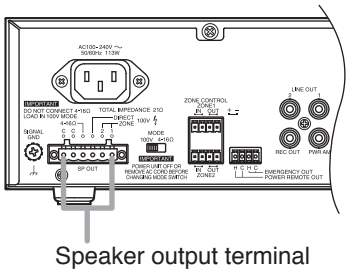

Speaker output terminal

Tips

- Either C terminal can be used for connection.
- Recommended speaker cable is IV or HIV cable with thickness described below.
  Solid copper cable: ø0.32 – 2.0 mm
  Stranded copper cable: 0.05 – 3.3 mm (AWG 30 – 12)

[Low impedance connection]

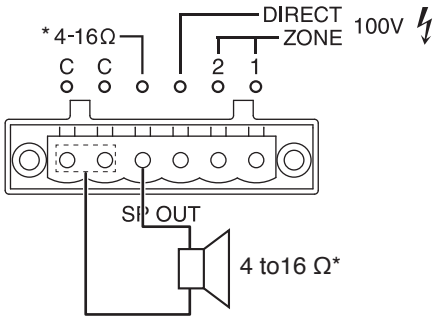

* In case of the A-3506D: 8 – 16 Ω

[High impedance connection]

Combined impedance:
170 Ω (A-3506D)
83 Ω (A-3512D)
42 Ω (A-3524D)
21 Ω (A-3548D)

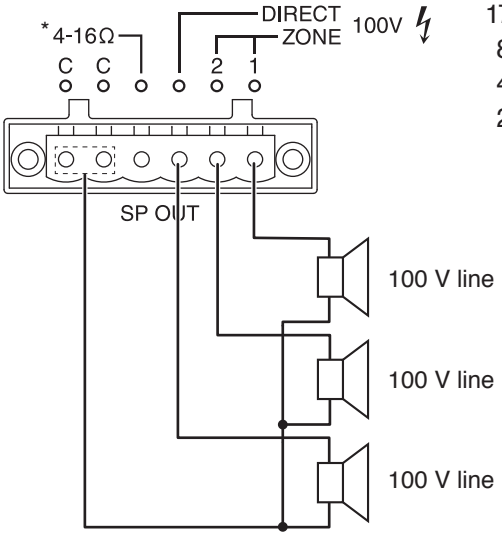

For the audio output at high impedance application setting, refer to "21. Speaker output terminal" on p. 9.

7.2. Input Terminal Connections and Settings

7.2.1. Connections

A-3506D/3512D/3524D/3548D

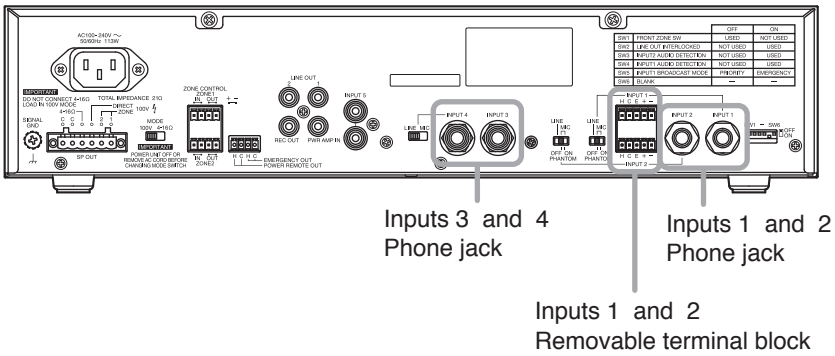

[Inputs 1 and 2]

(When connecting a 2-core shielded cable)

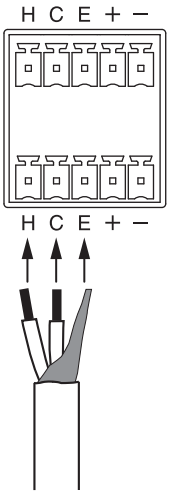

(When connecting a single core shielded cable)

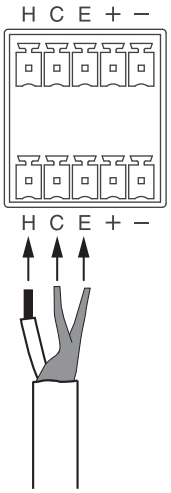

For cable wiring to the removable terminal plug, refer to p. 16.

[Inputs 1 through 4 (When connecting to the phone jack)]

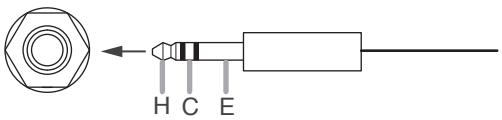

7.2.2. Inputs 1, 2, and 4 settings

Each of Inputs 1, 2, and 4 has its own setting switch corresponding to each input. Perform their settings as shown below as needed.

[Inputs 1 and 2]

Set the sound source level to connect and whether or not to use the phantom power when the microphone input is selected.

A-3506D/3512D/3524D/3548D

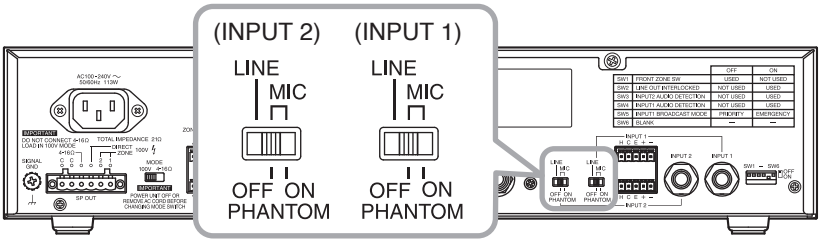

Input sound source	Switch position	Input specification
Line level	LINE	–20 dB*, 600 Ω
Microphone level, phantom power not required	MIC – PHANTOM OFF (Factory-preset)	–60 dB*, 600 Ω
Microphone level, phantom power required	MIC – PHANTOM ON	–60 dB*, 600 Ω

[Input 4]

Select the input sensitivity level for the equipment connected to Input 4.

A-3506D/3512D/3524D/3548D

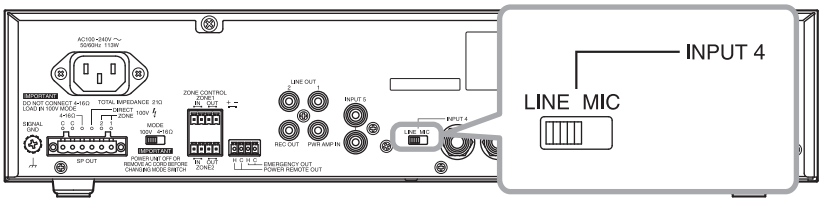

Input sound source	Switch position	Input specification
Line level	LINE	–20 dB*, 600 Ω, electronically balanced
Microphone level	MIC (Factory-preset)	–60 dB*, 600 Ω, electronically balanced

* 0 dB = 1 V

7.3. Connecting to the Power Remote Control Output Terminal

Use this terminal when remotely controlling other equipment. This terminal is activated when the unit is turned ON.
For cable wiring to the removable terminal plug, refer to p. 16.

A-3506D/3512D/3524D/3548D

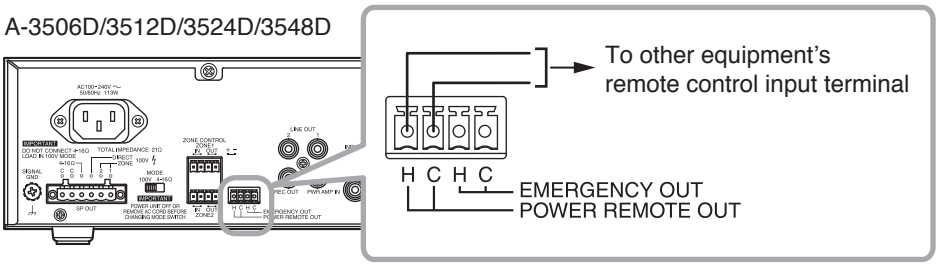

Output specifications: Open collector output, withstand voltage: 30 V DC or less, current: 25 mA or less

7.4. Connecting to the Emergency Control Output Terminal

Use this terminal when remotely controlling other equipment. This terminal is activated while the emergency broadcast is in progress from this unit.
For cable wiring to the removable terminal plug, refer to p. 16.

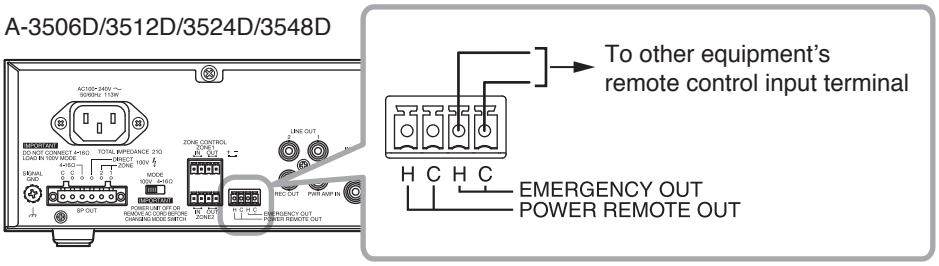

Output specifications: Open collector output, withstand voltage: 30 V DC or less, current: 25 mA or less

7.5. Connecting to the Zone Control IN/OUT Terminal

Zone can be selected by a control signal (make contact).
These terminals also output a control signal (logic low) when the zone is in selected state. They can be used for remotely controlling other equipment.

Note
Zone control is effective only when the output impedance setting switch is set to 100 V line (high impedance).

For cable wiring to the removable terminal plug, refer to p. 16.

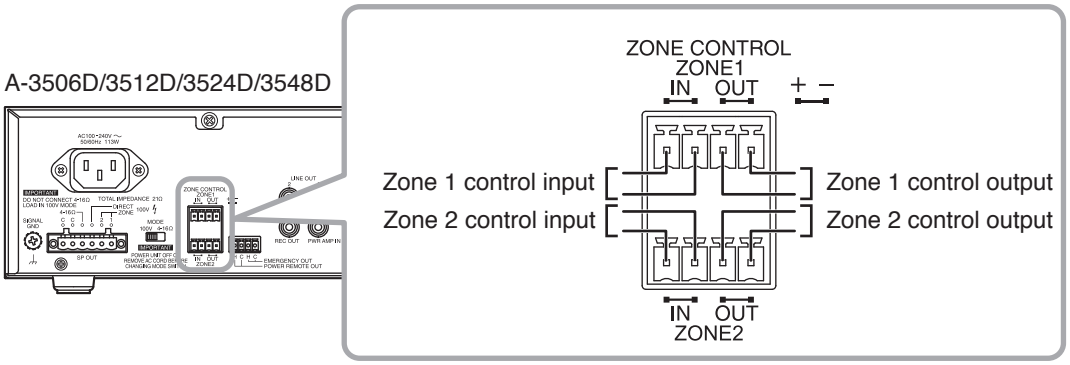

Control input signal specifications: Short-circuit current: 10 mA or less, open voltage: 35 V DC or less
Control output signal specifications: Open collector output (polarized), withstand voltage: 30 V DC or less, current: 25 mA or less

7.6. Connecting to the Control Input Terminal

Priority broadcast (see p. 20) can be controlled by inputting the contact signal to these terminals.

For cable wiring to the removable terminal plug, refer to p. 16.

A-3506D/3512D/3524D/3548D

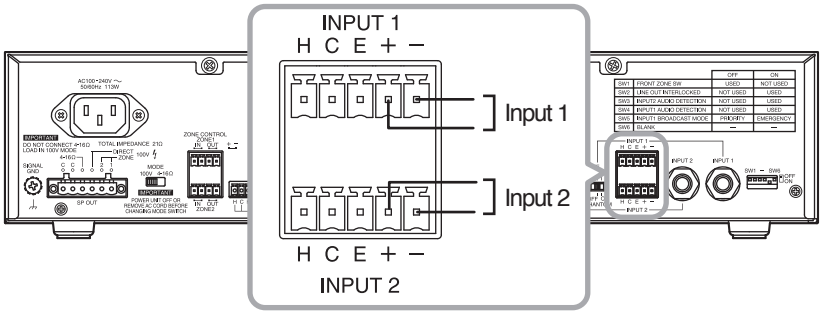

Input signal specifications: Short-circuit current: 10 mA or less, open voltage: 35 V DC or less

7.7. Connecting the External Equipment between the Line Output and the Power Amplifier

Appropriate sound can be obtained by connecting a signal processor like an equalizer or limiter between the unit's preamplifier section (Line output jack) and the power amplifier section (Power amplifier input jack).

Notes

- When using the signal processor, be sure to turn OFF the unit's line output interlock switch.
- Inserting a pin plug into the unit's power amplifier input jack disconnects the preamplifier section from the power amplifier section inside the unit.

Tip

Either Line output 1 or 2 can be used.

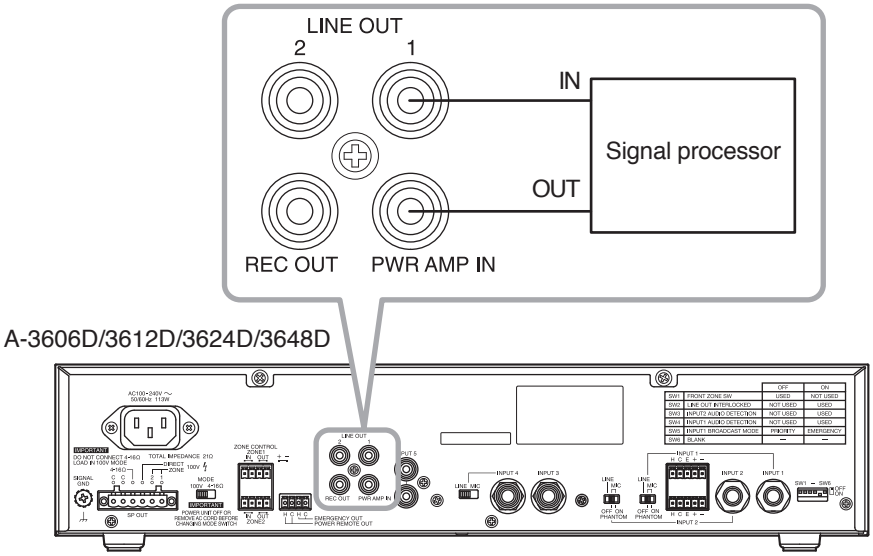

Line output specifications: 0 dB*, 600 Ω, unbalanced, RCA pin jack
Power amplifier input specifications: 0 dB*, 600 Ω, unbalanced, RCA pin jack

* 0 dB = 1 V

7.8. Removable Terminal Plug Connection

Step 1. Wiring the supplied removable terminal plug.

1-1. Loosen the terminal screws to insert the wire.

1-2. Tighten the terminal screws.
Ensure that the wire does not break free when pulled. If the wire does pull free, repeat the connection procedure from the start.

Step 2. Insert the wired terminal plug into the corresponding terminal block in the unit's rear panel.

Step 3. Only when the fixing screw is inserted, tighten the fixing screw.

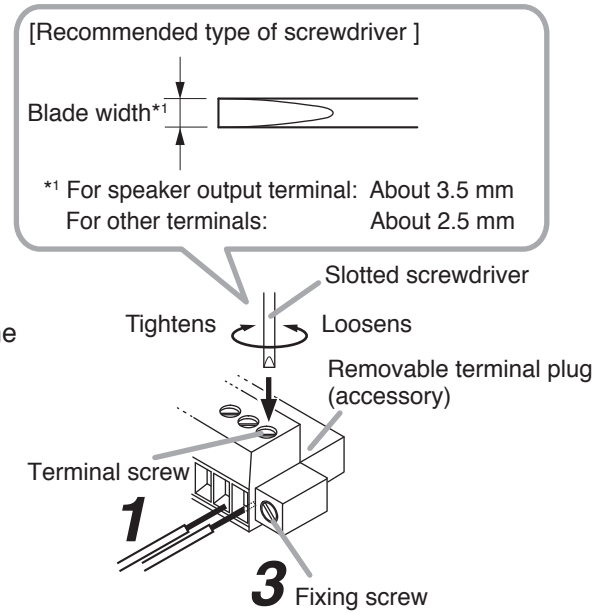

Notes

- Do not reverse **Steps 1** and **2** above. Poor contact may result if force is applied to the unit's internal circuit board pins while the terminal screws are being tightened.
- When detaching the terminal plug, pull it straight out. Pulling it out at an angle may cause the terminal plug or terminal block to break.

Tips

- Applicable cable size

	For speaker output terminal	For other terminals
Conductor cross-section area	0.05 – 3.3 mm^2	0.08 – 2.0 mm^2
AWG	AWG 30 – 12 or equivalent	AWG 28 – 14 or equivalent

- Cable sheath to trim

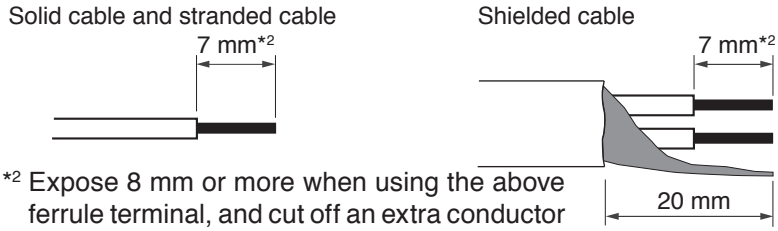

*2 Expose 8 mm or more when using the above ferrule terminal, and cut off an extra conductor protruding from the sleeve.

Note

Avoid soldering stranded or shielded cable, as contact resistance may increase when the cable is tightened and the solder is crushed, possibly resulting in an excessive rise in joint temperatures.

- When connecting 2 cables or a shielded cable to a single terminal, use a ferrule terminal with an insulation sleeve to crimp the cables because such cable conductors could become loose.

(1) Recommended ferrule terminals for signal cables (made by Phoenix Contact)

Unit: mm

	Model Number	a	b	l_1	l_2
①	AI 0,34-8 TQ	2	0.8	12.5	8
②	AI 0,5-8 WH	2.5	1.1	14	8

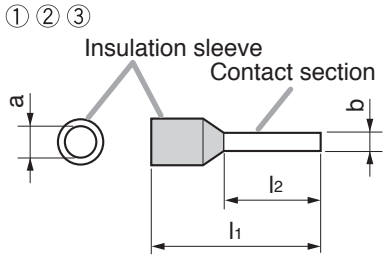

(2) Recommended ferrule terminals for speaker cables (made by Phoenix Contact)

Unit: mm

	Model Number	a	a_1	a_2	b	l_1	l_2
③	AI 1,5-8 BK	3.4	—	—	1.8	14	8
④	AI-TWIN 2 x 1,5-8 BK	—	6.6	3.6	2.3	16	8

Crimping tool: CRIMPFOX 10S (made by Phoenix Contact)

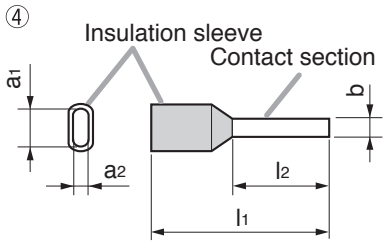

8. SETTINGS

8.1. Zone Selection Button Setting

Set whether or not to use the front-mounted Zone selection buttons with Switch 1 of the DIP switch.

Tip
Even when the Zone selection button is set to OFF, you can perform zone selection using the rear-mounted Zone control input terminal (see p. 14).

A-3506D/3512D/3524D/3548D

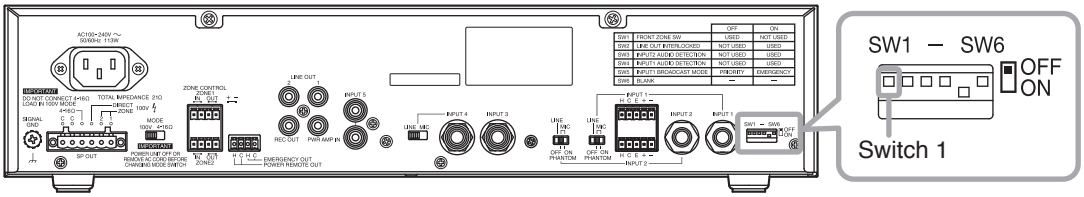

OFF: You can use the front-mounted Zone selection buttons. (Factory-preset)
ON: You cannot use the front-mounted Zone selection buttons.

8.2. Line Output Interlock Switch Setting

Set the interlock between zone selection and line output with Switch 2 of the DIP switch.

A-3506D/3512D/3524D/3548D

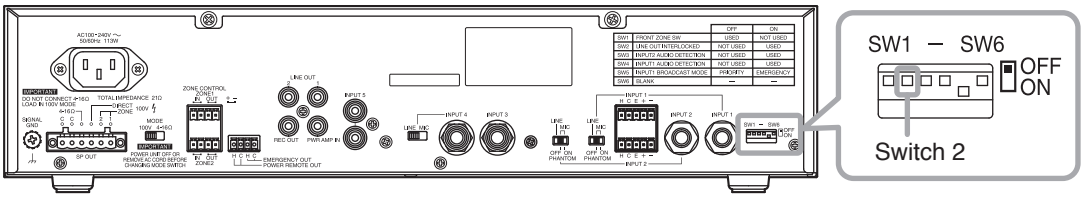

OFF: Signals are output from the Line output jacks 1 and 2 regardless of zone selection. (Factory-preset)
ON: Signals are output from the Line output jack 1 when the Zone 1 is selected and from the Line output jack 2 when the Zone 2 is selected.

8.3. Audio Detection Function Setting

Note
When the power switch is OFF, you cannot use the Audio detection function.

Set whether or not to use the Audio detection function (see p. 20) for Input 1 with the Switch 4 of DIP switch, and Input 2 with Switch 3 of the DIP switch.

A-3506D/3512D/3524D/3548D

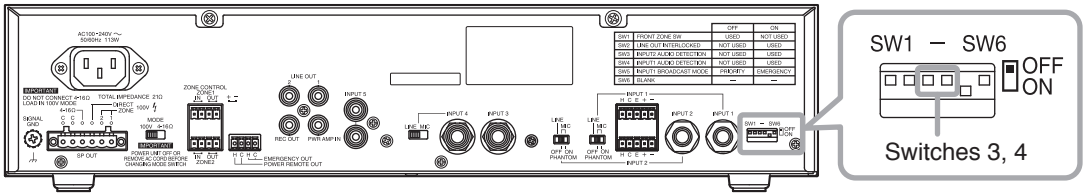

OFF: You cannot use the Audio detection function.(Factory-preset)
ON: You can use the Audio detection function.

8.4. Broadcast Mode Setting for Input 1

Set the broadcast mode for Input 1 with the Switch 5 of DIP switch.

A-3506D/3512D/3524D/3548D

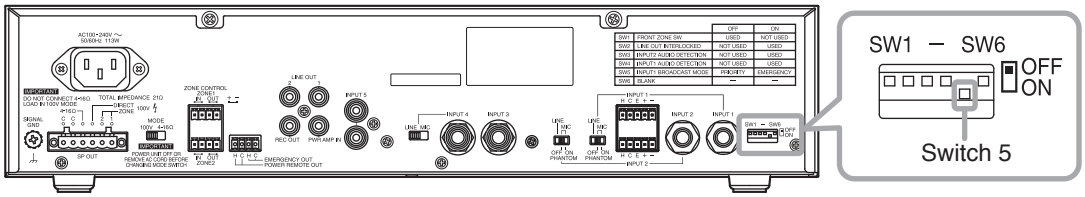

OFF: Sets the broadcast mode for Input 1 to Priority broadcast (see p. 20).
ON: Sets the broadcast mode for Input 1 to Emergency broadcast (see p. 21). (Factory-preset)

Note
If you set the broadcast mode to emergency broadcast, the Audio detection function of Input 1 is unavailable.

9. VOLUME ADJUSTMENT

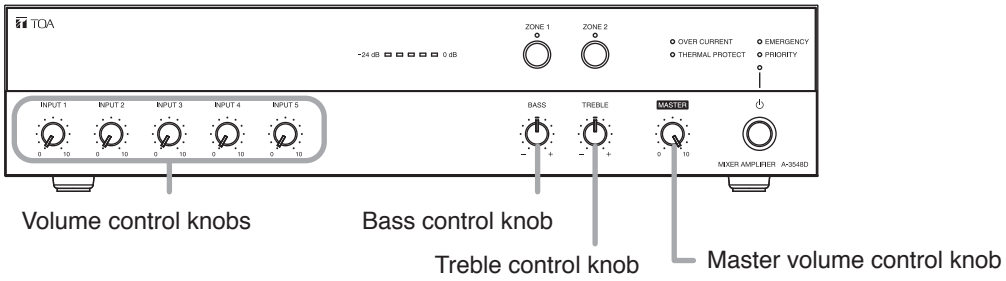

The unit's volume level can be adjusted in 2 steps using individual input volume control knobs and the Master volume control knob. Therefore, when the Master volume control knob is set to the minimum position, no sound is output even if each input volume control knob is set to the maximum. Be sure to adjust the entire volume level with the Master volume control knob in advance.

When the emergency broadcast mode is set, the broadcast can be made at the maximum volume regardless of the setting position of the Master volume control knob.* Also, the sound characteristic is made flat regardless of the setting positions of the Treble control knob and the Bass control knob.

* Volume control knobs for each input remain effective.

10. SPEAKER ZONE SELECTION

Pressing the unit's front-mounted Zone 1 selection switch or inputting the control signal to the Zone 1 control input terminal allows the Zone 1 indicator to light and the broadcast to be output from the speakers connected to the rear-amounted Zone 1 speaker output terminal. Concurrently, the control signal is output from the Zone 1 control output terminal.
Operation in the case of Zone 2 is the same as above.

Note
Speaker zone control is effective only when the impedance setting switch (p. 9) is set to 100 V line (high impedance).
When set to High impedance, audio signals are always output from the Direct speaker output terminal regardless of the Zone selection button setting.

11. INSTALLING TO AN EQUIPMENT RACK

When installing the unit to an equipment rack, remove the four plastic feet screwed on the unit's base as shown below.

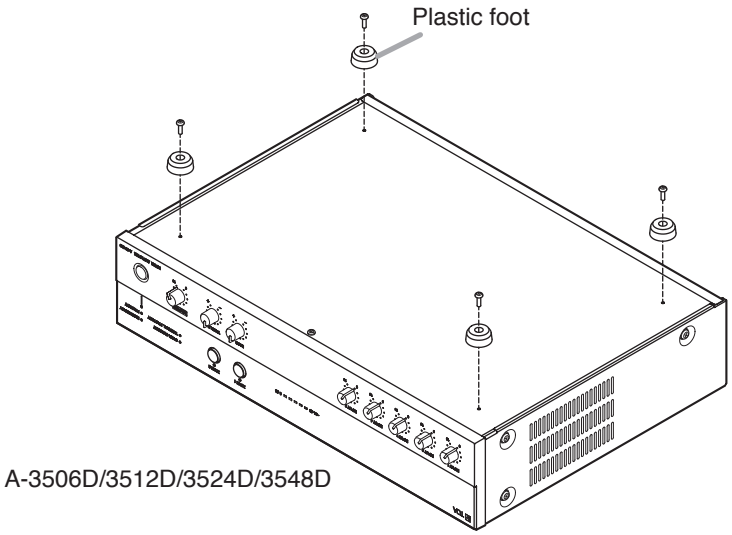

When installing the unit to an equipment rack, use the optional MB-25B Rack mounting bracket.

⚠ CAUTION Rack-mounting screws are not supplied with the optional MB-25B Rack mounting bracket. Prepare them that are appropriate for the equipment rack.

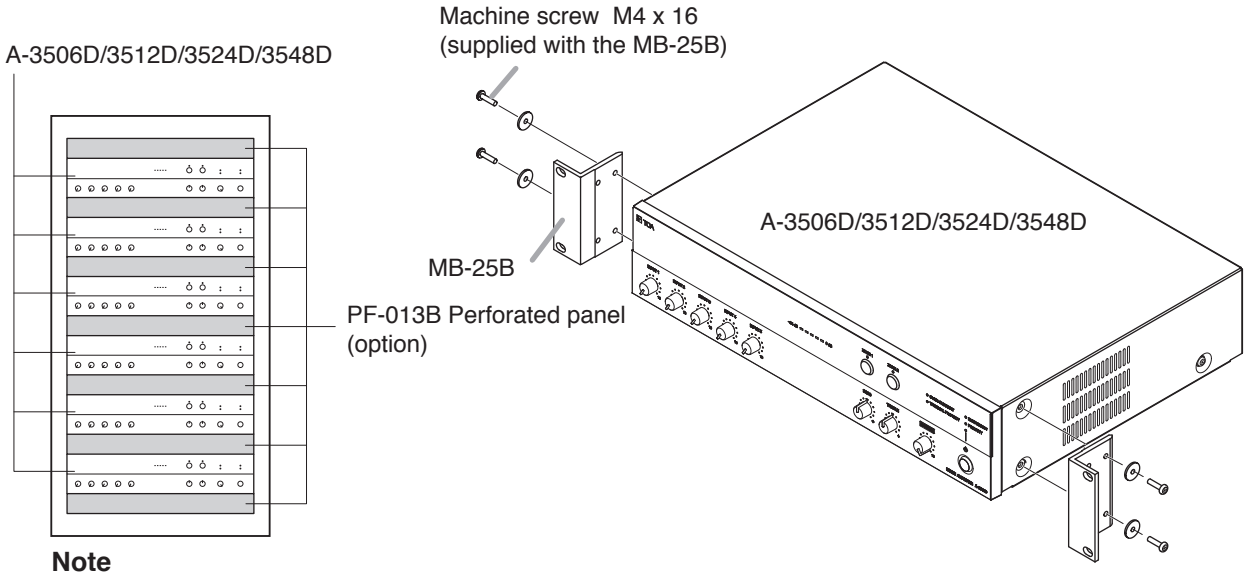

Note
To improve ventilation, ensure that a perforated panel (panel with air openings) of 1-unit size or greater is mounted over and under each unit, as well as on the top and at the bottom of the rack.

12. CONTROL SETTINGS

Output levels are adjustable with individual volume controls. For music play or announcements, adjust the corresponding volume control so that the red indicator doesn't light. Note that the sound quality is downgraded when the red indicator remains lit.
To prevent the accidental change of the settings of input volume and tone (Bass and Treble) controls, remove their knobs after setting them to the desired position and attach the supplied volume control covers instead.

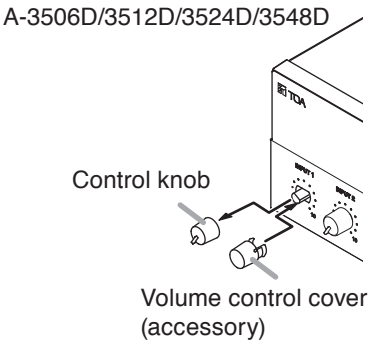

13. PRIORITY BROADCAST FUNCTION

13.1. Priority Broadcast

Priority broadcast function refers to a function that mutes the specific audio signal by means of the control signal or audio signal as a trigger when it is input.
The priority broadcast to be made from this unit can be activated by way of the following 4 signals as triggers.

- Control inputs 1 and 2 (contacts)
- Input 1 audio detection and Input 2 audio detection (Audio inputs)

The front-mounted Priority broadcast indicator remains lit during priority broadcast.
The table below shows the settings related to the unit's priorities.

	Priority level	Trigger	Broadcast type	Audio input	State
Input 1 Priority Broadcast	High	Control input 1	Priority/Emergency (Factory default: Emergency, see p. 18.)	Broadcast enabled from Input 1 only Mutes other inputs except Input 1	Always "USED"
		Input 1 audio detection	Priority		NOT USED/USED (Factory default: NOT USED, see p. 17)
Input 2 Priority broadcast		Control input 2	Priority	Broadcast enabled from Input 2 only Mutes other inputs except Input 2	Always "USED"
		Input 2 audio detection	Priority		NOT USED/USED (Factory default: NOT USED, see p. 17)
Normal broadcast	Low	None	Normal	Broadcast enabled from all inputs. Any inputs remain not muted.	Always "USED"

Note
You cannot make the audio detection (Input 1) valid when the Control input 1 is set to "Emergency."

The table below shows the differences between the control input and the audio detection.

	Signal that works as a trigger	Settable broadcast	Power activation at power-off
Control input	Control input 1	Emergency broadcast*1 Priority broadcast	Possible
	Control input 2	Priority broadcast	
Audio detection*2	Audio input 1	Priority broadcast	Impossible
	Audio input 2	Priority broadcast	

*1 Valid only when the broadcast mode of Input 1 is set to "Emergency broadcast." (See p. 18.)
*2 Valid only when the audio detection is set to "USED" and the power switch is turned ON. (See p. 17.)

13.2. Emergency Broadcast

You can set the Control input 1 to emergency broadcast activation. Use the rear-mounted DIP switch to make the setting. (See p. 18)
When the emergency broadcast mode is set, the broadcast can be made at the maximum volume regardless of the setting position of the Master volume control knob.* Also, the sound characteristic is made flat regardless of the setting positions of the Treble control knob and the Bass control knob.
During emergency broadcast, the front-mounted Emergency broadcast indicator remains lit, making the Emergency control output terminal closed.

* Volume control knobs for each input remain effective.

13.3. Normal Broadcast

The broadcast that stays in the state where the unit's power is ON with no trigger input is referred to as the Normal broadcast.

13.4. Relationship between Priority Broadcast by Control Input/Emergency Broadcast and Power On/Off

[When this unit is in power OFF state]

Power turns ON when the Priority broadcast or Emergency broadcast is activated.

[When this unit is in power ON state]

The unit's power remains ON regardless whether the Priority broadcast or Emergency broadcast is activated or terminated.

Notes
- The front-mounted power switch is disabled even if operated during Priority broadcast or Emergency broadcast.
- The unit's power ON/OFF state after the Priority broadcast or Emergency broadcast is terminated depends on the power switch ON/OFF state.

13.5. Factory-preset Operation

Shown below is the operation by the factory default.

Notes

- The audio detect function is set to "NOT USED." (See "Audio Detection Function Setting" on p. 17.)
- The priority level is fixed, and cannot be changed.

[Operation image]

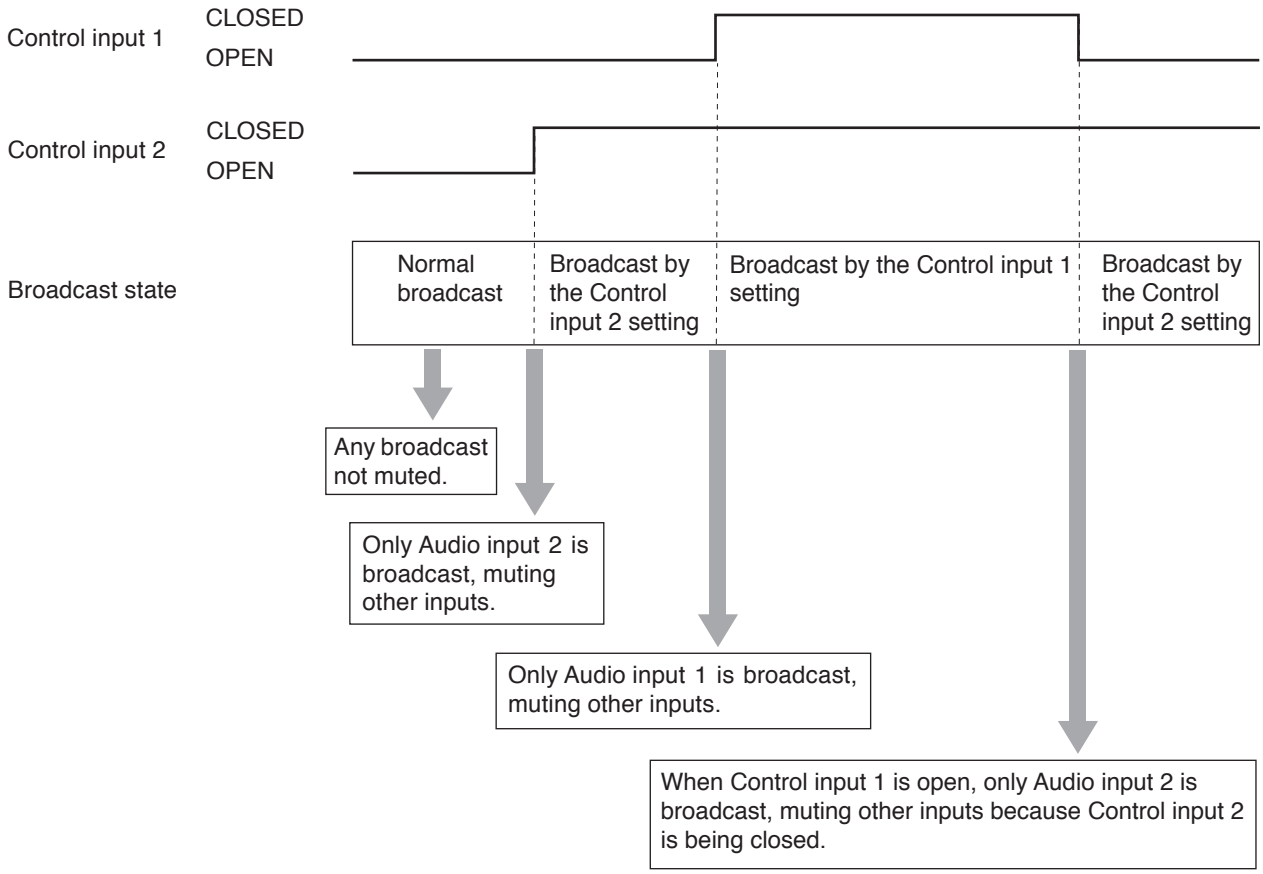

13.6. Operation When the Priority Broadcast Function Is Activated by Audio Detection

To activate the priority broadcast at this unit by way of audio detection, change the setting using the rear-mounted DIP switch. (See "Audio Detection Function Setting" on p. 17.)

Operation when power is ON differs from that when power is off.
The differences are explained here taking the following case as an example: The audio detection (Input 1) is changed to "USED" from the factory default setting as shown in the table below.

Trigger	Priority level	Emergency	Audio inputs					Status
			1	2	3	4	5	
Control input 1	High	Not set	●	🔇	🔇	🔇	🔇	USED
Audio detection (Input 1)		–	●	🔇	🔇	🔇	🔇	USED
Control input 2		–	🔇	●	🔇	🔇	🔇	USED
Audio detection (Input 2)		–	🔇	●	🔇	🔇	🔇	NOT USED
Normal broadcast	Low	–	●	●	●	●	●	–

🔇 : Muted
● : Not muted
– : Function cannot be set.

13.6.1. If the power switch is turned ON while being energized

[Operation image]

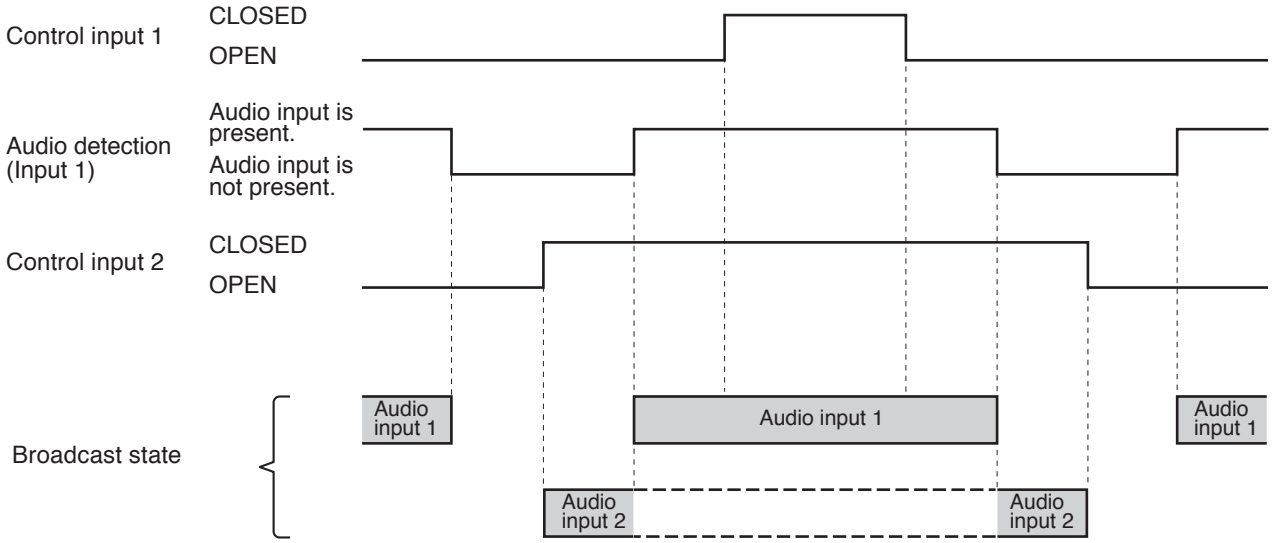

Notes

- Gray color " " represents the broadcast currently being output.
- Box with a dashed line " " represents the state that broadcast is activated but not being output because the priority level is low.

13.6.2. If the power switch is turned OFF while being energized

Even when the power switch is turned OFF while being energized, it is kept ON as long as the control input is closed.
Even if you turn on the Audio detection function (set by Switches 3 and 4 of the DIP switch) and input the audio signals while the unit's power switch is in the OFF state, the unit's power does not turn ON.

Note
The audio detection function works only when the front-mounted power switch is placed in ON state.
When the power switch is turned OFF, this function does not work even though the power is temporarily ON by the closed contact applied to the control input terminal.

[Operation image]

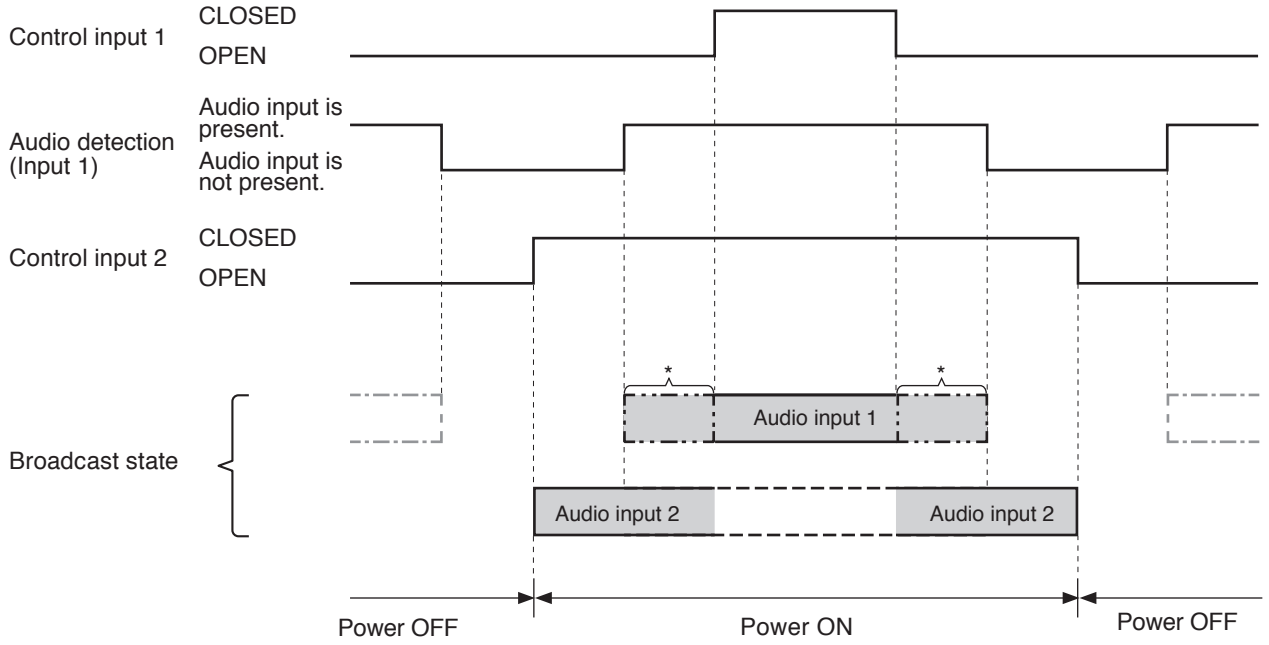

Notes

- Gray color " " represents the broadcast currently being output.
- Box with a dashed line " " represents the state that broadcast is not being output because the power switch is turned OFF though an audio detection trigger has been input.
- Box with a dash-dotted line " " represents the state that broadcast is not being output because the power switch is turned OFF though an audio detection trigger has been input.
- Box with a dash-dotted line " " represents the state that power is turned ON by the control input but the priority broadcast triggered by the Audio detection (Input 1) is not activated because the front-mounted power switch is turned OFF.

* Since the control input 1 is open, the broadcast mode will not become the priority broadcast of Audio input 1.
The Audio input 1 is mixed with the Audio input 2 and output because audio signals are input to the Audio input 1.

14. BLOCK DIAGRAM

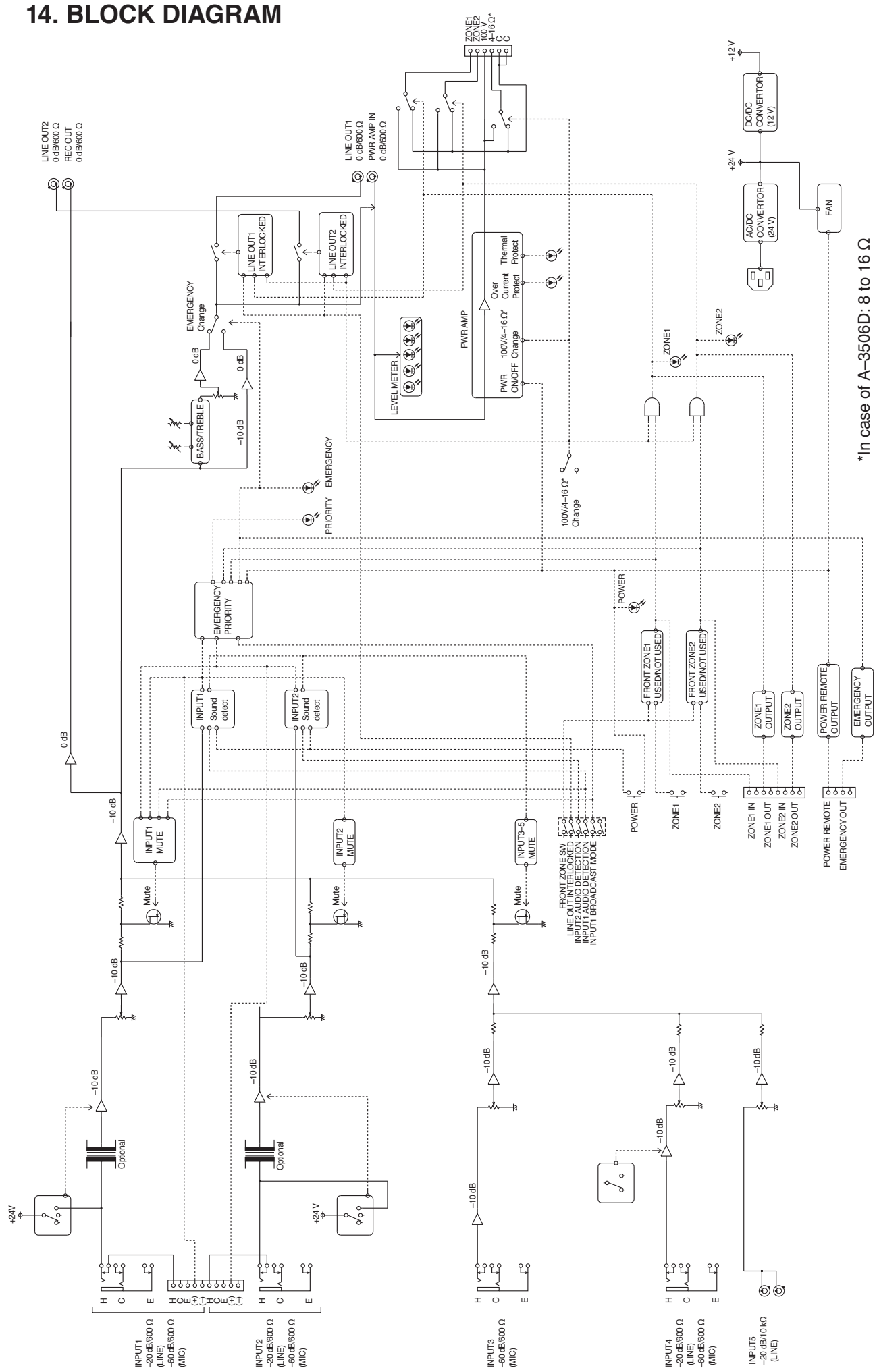

15. SPECIFICATIONS

	A-3506D	A-3512D	A-3524D	A-3548D
Power Source	100 to 240 V AC, 50/60 Hz			
Rated Output	60 W	120 W	240 W	480 W
Power/Current Consumption	96 W (rated output), 40 W (based on EN62368)	171 W (rated output), 48 W (based on EN62368)	314 W (rated output), 70 W (based on EN62368)	601 W (rated output), 113 W (based on EN62368)
	200 mA or less (when power switch is OFF)			
Frequency Response	50 Hz to 20 kHz ±3 dB (1/8 rated output)			
Distortion	1% or less at 1 kHz, rated power (20 kHz LPF (AUX-0025))			
Tone Control	Bass: ±10 dB at 100 Hz Treble: ±10 dB at 10 kHz			
Signal to Noise Ratio	88 dB or more (Master volume: min.) 76 dB or more (Master volume: max.) 55 dB or more (INPUT 1 to 4) 72 dB or more (INPUT 5) (A-weighted)			
Audio Input				
INPUT 1, 2	–60 dB* (MIC)/–20 dB* (LINE) selectable, 600 Ω, electronically-balanced, removable terminal block (3.81 mm, 5 pins)/ø6.3 mm phone jack (2P) **Note** MIC inputs are equipped with phantom power (24 V DC, ON/OFF switchable).			
INPUT 3	–60 dB*, 600 Ω, electronically-balanced, ø6.3 mm phone jack (2P)			
INPUT 4	–60 dB* (MIC)/–20 dB* (LINE) selectable, 600 Ω, electronically-balanced, ø6.3 mm phone jack (2P)			
INPUT 5	–20 dB*, 10 kΩ, unbalanced, RCA pin jack x 2			
PWR AMP IN	0 dB*, 600 Ω, unbalanced, RCA pin jack			
Audio Output				
SPEAKER OUT	Low impedance (8 to 16 Ω)/ High impedance (DIRECT, ZONE 1 /ZONE 2: 100 V/ total 170 Ω) (ZONE 1/ZONE 2 is selectable, Max. 60 W per output)	Low impedance (4 to 16 Ω)/ High impedance (DIRECT, ZONE 1 /ZONE 2: 100 V/ total 83 Ω) (ZONE 1/ZONE 2 is selectable, Max. 120 W per output)	Low impedance (4 to 16 Ω)/ High impedance (DIRECT, ZONE 1 /ZONE 2: 100 V/ total 42 Ω) (ZONE 1/ZONE 2 is selectable, Max. 240 W per output)	Low impedance (4 to 16 Ω)/ High impedance (DIRECT, ZONE 1 /ZONE 2: 100 V/ total 21 Ω) (ZONE 1/ZONE 2 is selectable, Max. 480 W per output)
	Removable terminal block (5.00 mm, 6 pins)			
REC OUT	0 dB*, 600 Ω, unbalanced, RCA pin jack			
LINE OUT 1, 2	0 dB*, 600 Ω, unbalanced, RCA pin jack (Interlock with zone selection is possible.)			
Control Input				
CONTROL IN	2 channels, no-voltage make contact input, open voltage: 35 V DC or less, short-circuit current: 10 mA or less, removable terminal block (3.81 mm, 5 pins)			
ZONE CONTROL IN	No-voltage make contact input, open voltage: 35 V DC or less, short-circuit current: 10 mA or less, removable terminal block (3.81 mm, 4 pins)			
Control Output				
POWER REMOTE OUT	Open collector output, withstand voltage: 30 V DC or less, control current: 25 mA or less, removable terminal block (3.50 mm, 4 pins)			
EMERGENCY OUT	Open collector output, withstand voltage: 30 V DC or less, control current: 25 mA or less, removable terminal block (3.50 mm, 4 pins)			
ZONE CONTROL OUT	Open collector output (polarized), withstand voltage: 30 V DC or less, control current: 25 mA or less, removable terminal block (3.81 mm, 4 pins)			

	A-3506D	A-3512D	A-3524D	A-3548D
Indicators	LED level meter, Power indicator, Priority broadcast indicator, Emergency broadcast indicator, Thermal protection indicator, Overcurrent protection indicator, Zone indicator (1,2)			
Operating Temperature	–10 to +40 °C			
Operating Humidity	85%RH or less (no condensation)			
Finish	Panel: ABS resin, black Case: Surface-treated steel plate, black, paint			
Dimensions	420 (w) x 96.1 (h) x 313.1 (d) mm			
Weight	4.9 kg			5.1 kg

* 0 dB = 1 V

Note: The design and specifications are subject to change without notice for improvement.

• **Accessories**

Power cord (2 m) 1
Audio input removable terminal plug (3.81 mm, 5 pins) 2
Control I/O removable terminal plug (3.81 mm, 4 pins) 2
Remote control removable terminal plug (3.50 mm, 4 pins) 1
Speaker out removable terminal plug (5.00 mm, 6 pins) 1
Volume control cover 4

• **Optional products**

Rack mounting bracket: MB-25B
Perforated panel: PF-013B

Traceability Information for Europe

Manufacturer:
TOA Corporation
7-2-1, Minatojima-Nakamachi, Chuo-ku, Kobe, Hyogo, Japan

Authorized representative:
TOA Electronics Europe GmbH
Suederstrasse 282, 20537 Hamburg, Germany

URL: https://www.toa.jp/

TOA Corporation

133-02-00581-01